ADDENDUM NO. 1

City of Franklin Engineering Office 109 Third Avenue South Franklin, TN 37064	Contract No. Project	2020-0173 Freedom Ballfields

Date of Issuance 7/23/2020

You are directed to make the following changes in the Contract Documents:

Contract Revisions:

1. Modified – EJCDC C-410, Bid Form for Construction Contract was not included in the Project Manual. Contractors are directed to insert this section into the project manual after the Instructions to Bidders (Section 00200) and before the Bid Form Exhibit A. **This document shall be physically attached to the Project Manual prior to submitting sealed bids.**

2. City of Franklin General Conditions of the Construction Contract and Construction Agreement Between Owner and Contractor (Stipulated Price) COF Contract No. 2020-0173 have been reviewed and approved by our City of Franklin Law Department. This revised document are marked as "Law Dept. approved 06.15.20" with no major changes. Following the award of the construction contract, City staff will replace these sections with the "Law Dept. approved 06.15.20" version attached to this Addendum. These are being provided for information only and the revised documents **do not** have to be physically attached to the Project Manual prior to submitting sealed bids.

Plan Revisions:

1. See Revision 1 to sheet P1.01, C1.01, C1.02, C1.06, C4.02, C4.05, C4.10, C4.11, L2.00, L2.01, L2.02, L2.03, L2.10, L2.11, L2.12 and L2.13.

Specification Revisions:

1. Section 26 56 68 – Exterior Athletic Lighting specification shall be delated in its entirety and replaced with the attached Section 26-56 68 – Exterior Athletic Lighting Specification date 7/23/2020.

Questions and Clarifications:

1. **Upon request, the Pre-Qualification period for Sport Field Contractors will be extended to 5:00 PM, July 31, 2020. Pre-Qualification shall be directed to shahad.abdulrahman@franklintn.gov.**

2. **Currently pre-qualified Sports Field Contractors are:**

   Sports Turf Solutions
   Ryan Moriarity
   606 St. Blaise Road
   Gallatin, TN 37066
   615.566.9799
   ryan@sportsturfconstruction.com

3. **Final Questions are due by July 31, 2020 at 5:00 PM. Questions shall be directed to shahad.abdulrahman@franklintn.gov.**

4. **Questions: At what point will the GC transfer mowing and general maintenance to the City of Franklin/FSSD?**
   Answer: General contractor shall be responsible for mowing and general maintenance / cleanliness of site throughout construction and until final completion is issues. See specification under Lawns and Grasses section 329200 – Lawns and Grasses.

5. **Question: Is Section 013233- Photographic Documentation provided by Owner?**
   Answer: Eliminate this specification. The City of Franklin does not want photographic Documentation.

6. **Question: In Project Manual per Article #14 -Page 61 of 75. There is a discrepancy on who is providing Testing for the project. Will this be the Owners or the General Contractor?**
   Answer: If building codes or other City codes require any work specifically to be inspected, tested, or approved, then the Contractor shall assume full responsibility for arranging and obtaining such inspections, test, or approvals and pay all costs in connection therewith and furnish Owner the required certificates of inspection or approval. The Owner shall pay for all additional testing and materials certifications above and beyond what is required for minimum code compliance.

7. **Question: Is there Knox Box required for the new buildings. If so, what locations do we install the Knox Box's.**
   Answer: Yes one knoxbox on the concessions building location to be determined by City Staff in the Field.

8. **Question: Will this be a Tennessee STATE inspection Project?**
   Answer: City of Franklin will provide the following inspections: building / code compliance inspections, monthly EPSC compliance inspections and onsite infrastructure inspections. The State of Tennessee may provide random inspections based on the NPDES Permit associated with the project. No state and/or federal funding is included in the project.

9. **Question: Do we need to furnish and install the followingitems?**
   a. **Foul Poles** *Answer: Yes see detail 9 on sheet C4.1*
   b. **Clocks** Answer: No clocks included in the project.
   c. **PA System** Answer: Yes, see note 2 on E1.1 for wiring. See E4.0 for PA location on poles.
   d. **Phone for dugout and pressbox** *Answer: No phone for the dugout and pressbox.*

10. **Question: Will there be a bid date extension due to extending the sports contractors portion? Please confirm the bid date is still August 7th 2020 @ 1:00P.M.**
    Answer: No. The bid date remains August 7, 2020 @ 1:00 PM

11. **Question: Are we to provide and install all kitchen equipment/ appliances?**
    Answer: Yes. The GC is to provide equipment specified in 1140.00.

12. **Question: Is the score board scope of work included with the signing allowance of $25,000.00?**
    Answer: No. The signing allowance is for additional work signing not included in the construction documents. The signing is still a work in progress and will be added to the project scope during the construction phase.

13. **Question: Can you explain in more detail on what we need to include for the Deduct Alternate on the Bid Form?**
    Answer: The masonry column wraps, walls, and caps are included in base bids. The deduct alt is

the cost of materials, labor, and all items necessary to install the seat wall and column wraps on the batting cages (see A2.C1, and A2.D1 for walls and column wrap limits).

14. **Question: Will we receive the information Pre-Bid notes from 7-16-2020 meeting?**
    Answer: Yes. Meeting minutes attached to this addendum.

15. **Question: Can you provide an electronic copy of the Bid Form?**
    Answer: No. Given the small size of the bid form we don't feel it's necessary to provide a copy in electronic format.

16. **Question: The Drawing Index list the following documents that are not included with the Bid Documents – Sheets A9.A1, A9.B1, A9.C1, A9.D1, A9.E1 and A9.F1. Please clarify.**
    Answer: This is an Index error; the sheets are intentionally not included. Finishes are specified in the A2 sheets.

17. **Question: The Chain link fence specification 323113 states there is tension wire running at the bottom of the fence in section 2.3 A 1 but the section 3.4H calls for bottom rail. Which is correct?**
    Answer: The bottom rail shall be required and not the tension wire running at the bottom of the fence.

18. **Question: The Chain link fence specification 323113 states there is a class 2b vinyl coating on all fence posts and rails in section 2.2 5 B but the finish section 2.6 E calls for a powder coating on all fence posts and rails. Is the class 2B vinyl coating acceptable for posts and rails so they can match the finish on the reset of the fencing?**
    Answer: Class 2B thermally fused and bonded for everything. (See note 9, Detail 6, sheet C4.05)

19. **Question: Are there additional areas outside the project limits that can be used for a laydown yard and employee parking?**
    Answer: The owner will work with the selected GC to identify additional laydown yard as needed for the project. The Contractor shall be responsible for all additional cost associated with additional EPSC, gravel, construction entrances, final stabilization, etc. as required. The Contractor can also use areas within the proposed limits of disturbance. The owner will designate parking spaces that can be used by the Contractors employees following award of the contract.

<u>Attachments</u>

a. Attachment A - Form 00410 – Bid Form for Construction Contracts
b. Attachment B - Construction Agreement Between Owner and Contractor (Stipulated Price) COF Contract No. 2020-0173
c. Attachment C – City of Franklin General Conditions of the Construction Contract
d. Attachment D - Plan Revision 1 to Sheet P1.01
e. Attachment E - Updated Musco Specifications Dated 7/23/2020.
f. Attachment F - See attached pre-bid meeting minutes

END of Addendum

BID FORM FOR CONSTRUCTION CONTRACT

The terms used in this Bid with initial capital letters have the meanings stated in the Instructions to Bidders, the General Conditions, and the Supplementary Conditions.

ARTICLE 1—OWNER AND BIDDER

1.01 This Bid is submitted to the office of the **City Engineer; City Hall; 109 3rd Ave South; Franklin TN 37064**

1.02 The undersigned Bidder proposes and agrees, if this Bid is accepted, to enter into an Agreement with Owner in the form included in the Bidding Documents to perform all Work as specified or indicated in the Bidding Documents for the prices and within the times indicated in this Bid and in accordance with the other terms and conditions of the Bidding Documents.

ARTICLE 2—ATTACHMENTS TO THIS BID

2.01 The following documents are submitted with and made a condition of this Bid:

A. Required Bid security;

B. Drug Free Affidavit;

C. Statement of License Certification;

ARTICLE 3—BASIS OF BID—LUMP SUM BID AND UNIT PRICES

3.01 *Lump Sum Bids*

A. Bidder will complete the Work in accordance with the Contract Documents for the lump sum price(s), together with any Unit Prices indicated on the Bid Form, as shown on **Exhibit A – Bid Form**.

B. Bidder acknowledges that:

1. each Bid Unit Price includes an amount considered by Bidder to be adequate to cover Contractor's overhead and profit for each separately identified item, and

2. estimated quantities are not guaranteed and are solely for the purpose of comparison of Bids, and final payment for all Unit Price Work will be based on actual quantities, determined as provided in the Contract Documents.

ARTICLE 4—TIME OF COMPLETION

4.01 Bidder agrees that the Work will be substantially complete and will be completed and ready for final payment in accordance with Paragraph 15.06 of the General Conditions on or before the dates or within the number of calendar days indicated in the Agreement.

4.02 Bidder accepts the provisions of the Agreement as to liquidated damages.

MODIFIED - EJCDC® C-410, Bid Form for Construction Contract.
Copyright© 2018 National Society of Professional Engineers, American Council of Engineering Companies, and American Society of Civil Engineers. All rights reserved.

ARTICLE 5—BIDDER'S ACKNOWLEDGEMENTS: ACCEPTANCE PERIOD, INSTRUCTIONS, AND RECEIPT OF ADDENDA

5.01 *Bid Acceptance Period*

A. This Bid will remain subject to acceptance for 60 days after the Bid opening, or for such longer period of time that Bidder may agree to in writing upon request of Owner.

5.02 *Instructions to Bidders*

A. Bidder accepts all of the terms and conditions of the Instructions to Bidders, including without limitation those dealing with the disposition of Bid security.

5.03 *Receipt of Addenda*

A. Bidder hereby acknowledges receipt of the following Addenda:

Addendum Number	Addendum Date

ARTICLE 6—BIDDER'S REPRESENTATIONS AND CERTIFICATIONS

6.01 *Bidder's Representations*

A. In submitting this Bid, Bidder represents the following:

1. Bidder has examined and carefully studied the Bidding Documents, including Addenda.
2. Bidder has visited the Site, conducted a thorough visual examination of the Site and adjacent areas, and become familiar with the general, local, and Site conditions that may affect cost, progress, and performance of the Work.
3. Bidder is familiar with all Laws and Regulations that may affect cost, progress, and performance of the Work.
4. Bidder has carefully studied the reports of explorations and tests of subsurface conditions at or adjacent to the Site and the drawings of physical conditions relating to existing surface or subsurface structures at the Site that have been identified in the Supplementary Conditions, with respect to the Technical Data in such reports and drawings.
5. Bidder has carefully studied the reports and drawings relating to Hazardous Environmental Conditions, if any, at or adjacent to the Site that have been identified in the Supplementary Conditions, with respect to Technical Data in such reports and drawings.
6. Bidder has considered the information known to Bidder itself; information commonly known to contractors doing business in the locality of the Site; information and observations obtained from visits to the Site; the Bidding Documents; and the Technical Data identified in the Supplementary Conditions or by definition, with respect to the effect of such information, observations, and Technical Data on (a) the cost, progress, and

Copyright© 2018 National Society of Professional Engineers, American Council of Engineering Companies, and American Society of Civil Engineers. All rights reserved.

performance of the Work; (b) the means, methods, techniques, sequences, and procedures of construction to be employed by Bidder, if selected as Contractor; and (c) Bidder's (Contractor's) safety precautions and programs.

7. Based on the information and observations referred to in the preceding paragraph, Bidder agrees that no further examinations, investigations, explorations, tests, studies, or data are necessary for the performance of the Work at the Contract Price, within the Contract Times, and in accordance with the other terms and conditions of the Contract.

8. Bidder is aware of the general nature of work to be performed by Owner and others at the Site that relates to the Work as indicated in the Bidding Documents.

9. Bidder has given Engineer written notice of all conflicts, errors, ambiguities, or discrepancies that Bidder has discovered in the Bidding Documents, and of discrepancies between Site conditions and the Contract Documents, and the written resolution thereof by Engineer is acceptable to Contractor.

10. The Bidding Documents are generally sufficient to indicate and convey understanding of all terms and conditions for performance and furnishing of the Work.

11. The submission of this Bid constitutes an incontrovertible representation by Bidder that without exception the Bid and all prices in the Bid are premised upon performing and furnishing the Work required by the Bidding Documents.

6.02 *Bidder's Certifications*

A. The Bidder certifies the following:

1. This Bid is genuine and not made in the interest of or on behalf of any undisclosed individual or entity and is not submitted in conformity with any collusive agreement or rules of any group, association, organization, or corporation.

2. Bidder has not directly or indirectly induced or solicited any other Bidder to submit a false or sham Bid.

3. Bidder has not solicited or induced any individual or entity to refrain from bidding.

4. Bidder has not engaged in corrupt, fraudulent, collusive, or coercive practices in competing for the Contract. For the purposes of this Paragraph 8.02.A:

a. Corrupt practice means the offering, giving, receiving, or soliciting of anything of value likely to influence the action of a public official in the bidding process.

b. Fraudulent practice means an intentional misrepresentation of facts made (a) to influence the bidding process to the detriment of Owner, (b) to establish bid prices at artificial non-competitive levels, or (c) to deprive Owner of the benefits of free and open competition.

c. Collusive practice means a scheme or arrangement between two or more Bidders, with or without the knowledge of Owner, a purpose of which is to establish bid prices at artificial, non-competitive levels.

d. Coercive practice means harming or threatening to harm, directly or indirectly, persons or their property to influence their participation in the bidding process or affect the execution of the Contract.

Copyright© 2018 National Society of Professional Engineers, American Council of Engineering Companies, and American Society of Civil Engineers. All rights reserved.

BIDDER hereby submits this Bid as set forth above:

Bidder:

_____
(typed or printed name of organization)

By: _____
(individual's signature)

Name: _____
(typed or printed)

Title: _____
(typed or printed)

Date: _____
(typed or printed)

If Bidder is a corporation, a partnership, or a joint venture, attach evidence of authority to sign.

Attest: _____
(individual's signature)

Name: _____
(typed or printed)

Title: _____
(typed or printed)

Date: _____
(typed or printed)

Address for giving notices:

_____

_____

Bidder's Contact:

Name: _____
(typed or printed)

Title: _____
(typed or printed)

Phone: _____

Email: _____

Address:

_____

_____

_____

Bidder's Contractor License No.: (if applicable) _____

Copyright© 2018 National Society of Professional Engineers, American Council of Engineering Companies, and American Society of Civil Engineers. All rights reserved.

CONSTRUCTION AGREEMENT BETWEEN OWNER AND CONTRACTOR (STIPULATED PRICE) COF CONTRACT NO. 2020-0173

This Agreement is by and between the City of Franklin, Tennessee ("Owner") and _____ ("Contractor").

Terms used in this Agreement have the meanings stated in the City of Franklin General Conditions of the Construction Contract ("General Conditions").

Owner and Contractor hereby agree as follows:

ARTICLE 1—WORK

1.01 Contractor shall complete all Work as specified and indicated in the Contract Documents. The Work is generally described as follows: Furnishing of all materials, equipment and labor for the construction of Baseball Fields, Restroom Pavilion, Concession Pavilion, Batting Cage, Site Work, Reclaimed Irrigation and Utility Services.

ARTICLE 2—THE PROJECT

2.01 The Project, of which the Work under the Contract Documents is a part, is generally described as follows: **Freedom Ball Fields**

ARTICLE 3—ENGINEER

3.01 The Owner has retained City Staff within the Engineering Department ("Engineer") as Owner's design engineer for the Project. Engineer shall have only those duties, responsibilities, rights, and authority assigned to Engineer in the Contract Documents.

ARTICLE 4—CONTRACT TIMES

4.01 *Time is of the Essence*

A. All time limits for Milestones, if any, Substantial Completion, and Final Completion are of the essence of the Contract.

4.02 *Contract Times*

A. The Work shall be substantially complete within 365 days after the date when the Contract Times commence to run as provided in Paragraph 4.01 of the General Conditions, and finally complete within 30 days after Substantial Completion.

4.03 *Milestones*

A. If indicated below, parts of the Work shall be substantially completed on or before the following Milestone(s):

1. Milestone 1: **The Baseball and Softball Fields, including a fully functional irrigation system, dugouts, fencing, gates, poles, lighting, curbing, and all work necessary to allow**

Copyright© 2018 National Society of Professional Engineers, American Council of Engineering Companies, and American Society of Civil Engineers. All rights reserved.

final planting and sprigging of the fields by July 1st, 2021 with no possibility of time extensions.

4.04 *Liquidated Damages and Bonus*

A. Contractor and Owner recognize that time is of the essence as stated in Paragraph 4.01, that Owner will suffer financial and other losses if the Work is not completed or any applicable Milestones are not achieved within the Contract Times, and that the extent of such losses is difficult to determine in advance. The parties also recognize the delays, expense, and difficulties involved in proving, in a legal proceeding, the actual loss suffered by Owner if the Work is not completed on time. Accordingly, instead of requiring any such proof, Owner and Contractor agree that as liquidated damages for delay:

1. *Substantial Completion:* Contractor shall pay Owner $1,000 for each day that expires after the time specified in Paragraph 4.02 for Substantial Completion until the Work is substantially complete.

2. *Completion of Remaining Work:* Contractor shall pay Owner $1,000 for each day that expires after the time specified in Paragraph 4.02 for Final Completion until the Work is finally complete.

3. *Milestones:* Contractor shall pay Owner $1,000 for each day that expires after the time specified in Paragraph 4.03 for achievement of any applicable Milestones until the applicable Milestone is achieved or until the time specified for Substantial Completion is reached, at which time the rate indicated in Paragraph 4.04.A.1 shall apply, rather than the Milestone rate.

4. Liquidated damages for failing to timely achieve any applicable Milestones, Substantial Completion, and Final Completion are mutually exclusive, and shall not be imposed concurrently. If at any time Contractor has failed to achieve more than one applicable Milestones and/or Contract Times, liquidated damages shall be calculated using the highest applicable rate in Paragraph 4.04.A.1, 2, or 3.

B. The parties acknowledge and agree that the foregoing liquidated damages are a fair and reasonable estimate of the losses Owner will suffer in the event of delay by Contractor and are not a penalty. If Owner recovers liquidated damages for a delay by Contractor, then such liquidated damages are Owner's sole and exclusive remedy for such delay, and Owner is precluded from recovering any other damages, whether actual, direct, excess, or consequential, for such delay, except for special damages as set forth in Paragraph 4.05.

C. *Bonus:* Contractor and Owner further recognize the Owner will realize financial and other benefits if the Work is completed prior to the time specified for Substantial Completion. Accordingly, Owner and Contractor agree that, as a bonus for early completion, Owner shall pay Contractor $1,000 for each day prior to the time specified in Paragraph 4.02 for Substantial Completion that the Work is substantially complete. The maximum value of the bonus shall be limited to $62,000.

4.05 *Special Damages*

A. Contractor shall reimburse Owner (1) for all fines and penalties imposed on Owner as a result of Contractor's failure to achieve Substantial Completion within the time specified in Paragraph 4.02 for Substantial Completion, and (2) for the actual costs reasonably incurred by Owner for engineering, construction observation, inspection, and administrative services

**EJCDC® C-520, Agreement between Owner and Contractor for Construction Contract (Stipulated Price).
Copyright© 2018 National Society of Professional Engineers, American Council of Engineering Companies, and American Society of Civil Engineers. All rights reserved.**

needed after the time specified in Paragraph 4.02 for Substantial Completion, until the Work is substantially complete.

B. Contractor shall reimburse Owner for all actual costs reasonably incurred by Owner in mitigating or avoiding delays and disruptions to the Work caused by or within the control of any of the Contractor Parties.

C. After Contractor achieves Substantial Completion, if Contractor fails to complete the remaining Work within the Contract Times, Contractor shall reimburse Owner for the actual costs reasonably incurred by Owner for engineering, construction observation, inspection, and administrative services needed after the time specified in Paragraph 4.02 for Final Completion, until the Work is finally complete.

D. The special damages imposed in this paragraph are in addition to any liquidated damages for delayed completion established in Paragraph 4.04.

ARTICLE 5—CONTRACT PRICE

5.01 Conditioned upon Contractor's performance and completion of the Work and other obligations in accordance with the Contract Documents, Owner shall pay Contractor as set forth in Article 6 for all Work at the price(s) stated in Contractor's Bid (attached as an exhibit to this Agreement), subject to adjustment under the Contract Documents.

ARTICLE 6—PAYMENT PROCEDURES

6.01 *Submittal and Processing of Payments*

A. Contractor shall submit Applications for Payment in accordance with Article 15 of the General Conditions. Applications for Payment shall be processed by Owner as provided in the General Conditions.

6.02 *Progress Payments*

A. Owner shall make progress payments on account of the Contract Price on the basis of Contractor's Applications for Payment on or about the last day of each month during performance of the Work, as provided in Paragraph 6.02.A.1 below, provided that such Applications for Payment have been submitted in a timely manner and otherwise meet the requirements of the Contract. All such payments will be measured by the Schedule of Values established as provided in the General Conditions (and in the case of Unit Price Work based on the number of units completed) or, in the event there is no Schedule of Values, as provided elsewhere in the Contract.

1. Prior to Substantial Completion, progress payments will be made in an amount equal to the percentage indicated below but, in each case, less the aggregate of payments previously made, and less such amounts as Owner may withhold, including but not limited to liquidated damages, in accordance with the Contract:

a. Ninety-five percent (95%) of Work completed (with the balance being retainage); and

b. Ninety-five percent (95%) of cost of materials and equipment purchased, but not incorporated in the Work (with the balance being retainage).

Copyright© 2018 National Society of Professional Engineers, American Council of Engineering Companies, and American Society of Civil Engineers. All rights reserved.

B. Upon Substantial Completion, Owner shall pay the full amount due to Contractor for Work completed, less such amounts set off by Owner pursuant to Paragraph 15.01.E of the General Conditions, and less 200% percent of Owner's estimate of the value of Work to be completed and corrected as shown on the punch list of items to be completed and corrected prior to Final Completion.

6.03 *Final Payment*

A. Upon Final Completion and Owner's acceptance of the Work, Owner shall pay the remainder of the Contract Price in accordance with Paragraph 15.06 of the General Conditions.

6.04 *Consent of Surety*

A. Owner shall not make final payment unless Contractor submits written consent of the surety to such payment.

ARTICLE 7—CONTRACT DOCUMENTS AND TECHNICAL DATA

7.01 *Contents of Contract Documents*

A. The Contract Documents consist of all of the following:

1. This Agreement.
2. Bonds:
   a. Performance bond (together with power of attorney).
   b. Payment bond (together with power of attorney).
3. Supplementary Conditions, if any.
4. General Conditions.
5. Specifications as listed in the table of contents of the project manual (copy of list attached).
6. The most recent edition of the following specifications as of the Effective Date of the Contract, except to the extent such specifications (i) do not apply based on the nature of the Project (e.g., road, bridge, street, water, or sewer), or (ii) conflict with another Contract Document identified in this Paragraph 7.01.A, in which case the conflicting provision of other Contract Document shall take precedence and control:
   a. TDOT Standard Specifications for Road and Bridge Construction.
   b. City of Franklin Street Specifications.
   c. City of Franklin Water and Sanitary Sewer Specifications.
   d. Freedom Ball Fields Technical Specifications
   e. Storm Water Pollution Prevention Plan – January 2020
7. Freedom Ball Fields Construction Plans Volume I and Volume II
8. Addenda (numbers ___ to ___, inclusive).
9. Exhibits to this Agreement (enumerated as follows):
   a. Contractor's Bid

**EJCDC® C-520, Agreement between Owner and Contractor for Construction Contract (Stipulated Price).
Copyright© 2018 National Society of Professional Engineers, American Council of Engineering Companies, and American Society of Civil Engineers. All rights reserved.**

10. The following, if issued or signed on or after the Effective Date of the Contract and not attached hereto:
    a. Notice to Proceed.
    b. Work Change Directives.
    c. Change Orders.
    d. Field Orders.
    e. Warranty Bond.

B. The Contract Documents listed in Paragraph 7.01.A are incorporated by reference and are part of the Contract whether attached to this Agreement or not.

C. There are no Contract Documents other than those listed above in this Article 7.

D. The Contract Documents may only be amended, modified, or supplemented in a writing signed by Owner and as otherwise provided in the Contract Documents, and all such amendments, modifications, and supplementations are limited to the matters specifically addressed in the applicable writing. No one is authorized by Owner to orally amend, modify, supplement, or waive any provision, or any of Owner's or Contractor's duties and obligations under, the Contract Documents.

E. Unless otherwise expressly stated, where reference is made in this Agreement or the General Conditions to a particular Paragraph or Article number, the reference refers to the corresponding Paragraph or Article in the document in which the reference appears.

7.02 *Technical Data Regarding Existing Surface and Subsurface Conditions*

A. The following table lists the reports known to Owner of explorations and tests of subsurface conditions at or adjacent to the Site that contain Technical Data, and specifically identifies the Technical Data in the report upon which Contractor may reasonably rely: **[If there are no such reports, so indicate in the table.]**

Report Title	Date of Report	Technical Data
Geotechnical Engineering Report	12/20/2018	**Geotechnical Data**

B. The following table lists the drawings known to Owner of existing physical conditions at or adjacent to the Site, including those drawings depicting existing surface or subsurface structures at or adjacent to the Site (except Underground Facilities), that contain Technical Data, and specifically identifies the Technical Data upon which Contractor may reasonably rely: **[If there are no such drawings, so indicate in the table.]**

Drawings Title	Date of Drawings	Technical Data
None	None	None

C. Contractor may examine during regular business hours copies of reports and drawings identified in Paragraphs 7.02.A and 7.02.B that were not included with the Bidding Documents at **[109 3rd Ave South, Franklin, TN]**, or may request copies from Owner.

**EJCDC® C-520, Agreement between Owner and Contractor for Construction Contract (Stipulated Price).
Copyright© 2018 National Society of Professional Engineers, American Council of Engineering Companies, and American Society of Civil Engineers. All rights reserved.**

7.03 *Technical Data Regarding Hazardous Environmental Conditions*

A. The following table lists the reports known to Owner relating to Hazardous Environmental Conditions at or adjacent to the Site, and the Technical Data (if any) upon which Contractor may reasonably rely: **[If there are no such reports, so indicate in the table.]**

Report Title	Date of Report	Technical Data
None	None	**None**

B. The following table lists the drawings known to Owner relating to Hazardous Environmental Conditions at or adjacent to the Site, and Technical Data (if any) contained in such Drawings upon which Contractor may reasonably rely: **[If there are no such drawings, so indicate in the table.]**

Drawings Title	Date of Drawings	Technical Data
None	None	None

C. Contractor may examine during regular business hours copies of reports and drawings identified in Paragraphs 7.03.A and 7.03.B that were not included with the Bidding Documents at **[109 3rd Ave South, Franklin, TN]**, or may request copies from Owner.

ARTICLE 8—INSURANCE LIMITS

8.01 Contractor shall purchase and maintain the following types of insurance as more fully set forth in Article 6 of the General Conditions. Such insurance shall be written for not less than the limits set forth below.

A. *Commercial General Liability:*

Commercial General Liability	Policy limits of not less than:
General Aggregate	$2,000,000
Products—Completed Operations Aggregate	$2,000,000
Personal and Advertising Injury	$1,000,000
Bodily Injury and Property Damage—Each Occurrence	$1,000,000

B. *Automobile Liability:*

Automobile Liability	Policy limits of not less than:
Bodily Injury	
Each Person	$1,000,000
Each Accident	$1,000,000
Property Damage	
Each Accident	$1,000,000

EJCDC® C-520, Agreement between Owner and Contractor for Construction Contract (Stipulated Price).
Copyright© 2018 National Society of Professional Engineers, American Council of Engineering Companies, and American Society of Civil Engineers. All rights reserved.

C. *Worker's Compensation and Employer's Liability*

Worker's Compensation and Employer's Liability	Policy limits of not less than:
State and Federal (as applicable)	Statutory Limit
Employer's Liability (accident – per occurrence)	$1,000,000
Employer's Liability (disease – policy limit)	$1,000,000
Employer's Liability (disease – policy limit)	$1,000,000

D. *Umbrella or Excess Liability:*

Excess or Umbrella Liability	Policy limits of not less than:
Each Occurrence	$5,000,000
General Aggregate	$5,000,000

ARTICLE 9—REPRESENTATIONS, CERTIFICATIONS, AND STIPULATIONS

9.01 *Contractor's Representations*

A. In order to induce Owner to enter into this Contract, Contractor makes the following representations:

1. Contractor has examined and carefully studied the Contract Documents.
2. Contractor has visited the Site, conducted a thorough visual examination of the Site and adjacent areas, and become familiar with the general, local, and Site conditions that might affect cost, progress, and performance of the Work.
3. Contractor is familiar with all Laws and Regulations that might affect cost, progress, and performance of the Work.
4. Contractor has carefully studied the reports of explorations and tests of subsurface conditions at or adjacent to the Site and the drawings of physical conditions relating to existing surface or subsurface structures at the Site that have been identified in the Contract Documents or otherwise made available to Contractor with respect to the Technical Data in such reports and drawings.
5. Contractor has carefully studied the reports and drawings relating to Hazardous Environmental Conditions at or adjacent to the Site that have been identified in the Contract Documents or otherwise made available to Contractor, with respect to Technical Data in such reports and drawings.
6. Contractor has considered the information known to Contractor itself; information commonly known to contractors doing business in the locality of the Site; information and observations obtained from visits to the Site; the Contract Documents; and Technical Data, with respect to the effect of such information, observations, and Technical Data on (a) the cost, progress, and performance of the Work; (b) the means, methods, techniques, sequences, and procedures of construction to be employed by Contractor; and (c) Contractor's safety precautions and programs.

EJCDC® C-520, Agreement between Owner and Contractor for Construction Contract (Stipulated Price).
Copyright© 2018 National Society of Professional Engineers, American Council of Engineering Companies, and American Society of Civil Engineers. All rights reserved.

7. Based on the information and observations referred to above, Contractor agrees that no further examinations, investigations, explorations, tests, studies, or data are necessary for the performance of the Work at the Contract Price, within the Contract Times, and in accordance with the other provisions of the Contract Documents.

8. Contractor is aware of the general nature of work to be performed by Owner and others at the Site that relates to the Work as indicated in the Contract Documents.

9. Contractor has given Owner written notice of all conflicts, errors, ambiguities, or discrepancies that Contractor has discovered in the Contract Documents, and of discrepancies between Site conditions and the Contract Documents and Technical Data, and the resolution thereof by Owner or Engineer is acceptable to Contractor.

10. The Contract Documents are generally sufficient to indicate and convey understanding of all requirements for performance of the Work.

11. Contractor's entry into this Contract constitutes an incontrovertible representation by Contractor that without exception all prices in the Agreement are premised upon performance of the Work as required by the Contract Documents.

12. Contractor is authorized to do business in Tennessee, and is properly licensed and registered as necessary by or with all governmental and public and quasi-public authorities having jurisdiction over the Contractor, the Work, and the Project.

13. Contractor possesses a high level of experience, expertise, and competence in the business of administration, construction, construction management, and superintendence of projects of the size, complexity, and nature of the Project, and shall perform the Work with the care, skill, and diligence of such a contractor.

9.02 *Contractor's Certifications*

A. Contractor certifies that it has not engaged in corrupt, fraudulent, collusive, or coercive practices in competing for, bidding for, or entering into the Contract. For the purposes of this paragraph:

1. "corrupt practice" means the offering, giving, receiving, or soliciting of anything of value likely to influence the action of a public official;

2. "fraudulent practice" means an intentional misrepresentation of facts made (a) to influence the bidding or contracting process, (b) to establish Bid or Contract prices at artificial, non-competitive levels, or (c) to deprive Owner of the benefits of free and open competition;

3. "collusive practice" means a scheme or arrangement between two or more Bidders, with or without the knowledge of Owner, a purpose of which is to establish Bid prices at artificial, non-competitive levels; and

4. "coercive practice" means harming or threatening to harm, directly or indirectly, persons or their property to influence their participation in the bidding or contracting process.

Copyright© 2018 National Society of Professional Engineers, American Council of Engineering Companies, and American Society of Civil Engineers. All rights reserved.

IN WITNESS WHEREOF, Owner and Contractor have signed this Agreement.

This Agreement shall be effective on _____, 20__ (which is the Effective Date of the Contract).

Owner:

City of Franklin, Tennessee
(typed or printed name of organization)

By: _____
(individual's signature)

Date: _____
(date signed)

Name: Dr. Ken Moore
(typed or printed)

Title: Mayor
(typed or printed)

Attest: Eric S. Stuckey
(individual's signature)

Title: City Administrator
(typed or printed)

Address for giving notices:

109 3rd Ave South

Franklin, TN 37064

Designated Representative:

Name: _____
(typed or printed)

Title: _____
(typed or printed)

Address:

Phone: _____

Email: _____

Approved as to form:

Maricruz R. Fincher, Staff Attorney

Contractor:

_____
(typed or printed name of organization)

By: _____
(individual's signature)

Date: _____
(date signed)

Name: _____
(typed or printed)

Title: _____
(typed or printed)

Attest: _____
(individual's signature)

Title: _____
(typed or printed)

Address for giving notices:

Designated Representative:

Name: _____
(typed or printed)

Title: _____
(typed or printed)

Address:

Phone: _____

Email: _____

License No.: _____
(where applicable)

State: _____

EJCDC® C-520, Agreement between Owner and Contractor for Construction Contract (Stipulated Price).
Copyright© 2018 National Society of Professional Engineers, American Council of Engineering Companies, and American Society of Civil Engineers. All rights reserved.

CITY OF FRANKLIN
GENERAL CONDITIONS
OF THE CONSTRUCTION CONTRACT

TABLE OF CONTENTS

Page

Article 1—Definitions and Terminology 1
1.01 Defined Terms 1
1.02 Terminology 6
Article 2—Preliminary Matters 8
2.01 Delivery of Performance and Payment Bonds; Evidence of Insurance 8
2.02 Copies of Documents 8
2.03 Before Starting Construction 8
2.04 Preconstruction Conference; Designation of Authorized Representatives 9
2.05 Acceptance of Schedules 9
2.06 Electronic Transmittals 9
Article 3—Contract Documents: Intent, Requirements, Reuse 10
3.01 Intent 10
3.02 Reference Standards 10
3.03 Reporting and Resolving Discrepancies 11
3.04 Requirements of the Contract Documents 11
3.05 Reuse of Documents 12
Article 4—Commencement and Progress of the Work 12
4.01 Commencement of Contract Times; Notice to Proceed 12
4.02 Starting the Work 12
4.03 Reference Points 12
4.04 Progress Schedule 13
4.05 Delays in Contractor's Progress 13
Article 5—Site; Subsurface and Physical Conditions; Hazardous Environmental Conditions 16
5.01 Availability of Lands 16
5.02 Use of Site and Other Areas 16

EJCDC® C-700, Standard General Conditions of the Construction Contract.
Copyright© 2018 National Society of Professional Engineers, American Council of Engineering Companies, and American Society of Civil Engineers. All rights reserved.

5.03 Subsurface and Physical Conditions 17
5.04 Differing Subsurface or Physical Conditions 18
5.05 Underground Facilities 20
5.06 Hazardous Environmental Conditions 21
Article 6—Bonds and Insurance 23
6.01 Performance, Payment, and Other Bonds 23
6.02 Insurance—General Provisions 24
6.03 Contractor's Insurance 25
6.04 Builder's Risk and Other Property Insurance 28
6.05 Property Losses; Subrogation 28
6.06 Receipt and Application of Property Insurance Proceeds 30
Article 7—Contractor's Responsibilities 30
7.01 Contractor's Means and Methods of Construction 30
7.02 Supervision and Superintendence 30
7.03 Labor; Working Hours 30
7.04 Services, Materials, and Equipment 31
7.05 "Or Equals" 32
7.06 Substitutes 33
7.07 Concerning Subcontractors and Suppliers 34
7.08 Patent Fees and Royalties 36
7.09 Permits 36
7.10 Taxes 36
7.11 Laws and Regulations 37
7.12 Record Documents 37
7.13 Safety and Protection 37
7.14 Hazard Communication Programs 38
7.15 Emergencies 39
7.16 Submittals 39
7.17 Contractor's General Warranty and Guarantee 42
7.18 Indemnification 43
7.19 Delegation of Professional Design Services 43
Article 8—Other Work at the Site 44

Copyright© 2018 National Society of Professional Engineers, American Council of Engineering Companies, and American Society of Civil Engineers. All rights reserved.

8.01 Other Work 44
8.02 Coordination 45
8.03 Legal Relationships 45
Article 9—Owner's Responsibilities 46
9.01 Communications to Contractor 46
9.02 Replacement and Role of Engineer 46
9.03 Furnish Data 46
9.04 Pay When Due 47
9.05 Lands and Easements; Reports, Tests, and Drawings 47
9.06 Insurance 47
9.07 Change Orders 47
9.08 Inspections, Tests, and Approvals 47
9.09 Limitations on Owner's Responsibilities 47
9.10 Undisclosed Hazardous Environmental Condition 47
9.11 Evidence of Financial Arrangements 47
9.12 Safety Programs 47
Article 10—Engineer's and Owner's Status During Construction 48
10.01 Authority of Engineer 48
10.02 Visits to Site 48
10.03 Determinations for Unit Price Work 48
10.04 Decisions on Requirements of Contract Documents and Acceptability of Work 48
10.05 Limitations on Engineer's Authority and Responsibilities 48
10.06 Compliance with Safety Program 49
Article 11—Changes to the Contract 49
11.01 Amending and Supplementing the Contract 49
11.02 Change Orders 49
11.03 Work Change Directives 49
11.04 Field Orders 50
11.05 Owner-Authorized Changes in the Work 50
11.06 Unauthorized Changes in the Work 50
11.07 Change of Contract Price 50
11.08 Change of Contract Times 51

Copyright© 2018 National Society of Professional Engineers, American Council of Engineering Companies, and American Society of Civil Engineers. All rights reserved.

11.09 Change Proposals ... 52
11.10 Notification to Surety ... 53
Article 12—Claims ... 53
12.01 Claims ... 53
Article 13—Cost of the Work; Allowances; Unit Price Work ... 54
13.01 Cost of the Work ... 54
13.02 Allowances ... 58
13.03 Unit Price Work ... 58
Article 14—Tests and Inspections; Correction, Removal, or Acceptance of Defective Work ... 59
14.01 Access to Work ... 59
14.02 Tests, Inspections, and Approvals ... 59
14.03 Defective Work ... 60
14.04 Acceptance of Defective Work ... 60
14.05 Uncovering Work ... 61
14.06 Owner May Stop the Work ... 61
14.07 Owner May Correct Defective Work ... 61
Article 15—Payments to Contractor; Set-Offs; Completion; Correction Period ... 62
15.01 Progress Payments ... 62
15.02 Contractor's Warranty of Title ... 65
15.03 Substantial Completion ... 65
15.04 Partial Use or Occupancy ... 65
15.05 Final Inspection ... 66
15.06 Final Completion and Payment ... 66
15.07 Waiver of Claims ... 68
15.08 Correction Period ... 68
Article 16—Suspension of Work and Termination ... 69
16.01 Owner May Suspend Work ... 69
16.02 Contractor Default; Owner May Terminate the Contract for Cause ... 69
16.03 Owner May Terminate the Contract for Convenience ... 70
16.04 Contractor May Stop Work or Terminate the Contract ... 70
Article 17—Final Resolution of Disputes ... 71
17.01 Methods and Procedures ... 71

EJCDC® C-700, Standard General Conditions of the Construction Contract.
Copyright© 2018 National Society of Professional Engineers, American Council of Engineering Companies, and American Society of Civil Engineers. All rights reserved.

Article 18—Miscellaneous 71
18.01 Giving Notice 71
18.02 Computation of Times 72
18.03 Cumulative Remedies 72
18.04 Limitation of Damages 72
18.05 No Waiver 72
18.06 Survival of Obligations 72
18.07 Controlling Law 72
18.08 Assignment of Contract 72
18.09 Successors and Assigns 72
18.10 Headings 73

EJCDC® C-700, Standard General Conditions of the Construction Contract.
Copyright© 2018 National Society of Professional Engineers, American Council of Engineering Companies, and American Society of Civil Engineers. All rights reserved.

CITY OF FRANKLIN
STANDARD GENERAL CONDITIONS
OF THE CONSTRUCTION CONTRACT

ARTICLE 1—DEFINITIONS AND TERMINOLOGY

1.01 *Defined Terms*

A. Wherever used in the Bidding Requirements or Contract Documents, a term printed with initial capital letters, including the term's singular and plural forms, shall have the meaning indicated in the definitions in this Paragraph 1.01. In addition to terms specifically defined, terms with initial capital letters in the Contract Documents include references to identified articles and paragraphs, and the titles of other documents or forms.

1. *Addenda*—Written or graphic instruments that clarify, correct, or change the Bidding Requirements or the proposed Contract Documents.

2. *Agreement*—The written instrument, signed by Owner and Contractor, that sets forth the Contract Price and Contract Times, identifies the parties and the Engineer, and designates the specific items that are Contract Documents.

3. *Application for Payment*—The document prepared by Contractor, in a form acceptable to Owner, to request progress or final payments, and that is to be accompanied by such supporting documentation as is required by the Contract Documents.

4. *Bid*—The offer of a Bidder submitted on the prescribed form setting forth the prices for the Work to be performed.

5. *Bidder*—An individual or entity that submits a Bid to Owner.

6. *Bidding Documents*—The Bidding Requirements, the proposed Contract Documents, and all Addenda.

7. *Bidding Requirements*—The Advertisement or invitation to bid, Instructions to Bidders, Bid Bond or other Bid security, if any, the Bid Form, and the Bid with any attachments.

8. *Change Order*—A document that is signed by Contractor and Owner and authorizes an addition, deletion, or revision in the Work or an adjustment in the Contract Price or the Contract Times, or other revision to the Contract, issued on or after the Effective Date of the Contract.

9. *Change Proposal*—A written request by Contractor, duly submitted in compliance with the procedural requirements set forth herein, seeking an adjustment in Contract Price or Contract Times; contesting an initial decision by Owner concerning the acceptability of Work under the Contract Documents; challenging a set-off against payments due; or seeking other relief with respect to the Contract.

10. *Claim*

a. A demand or assertion by Owner directly to Contractor, duly submitted in compliance with the procedural requirements set forth herein, seeking an adjustment of Contract

Copyright© 2018 National Society of Professional Engineers, American Council of Engineering Companies, and American Society of Civil Engineers. All rights reserved.

Price or Contract Times; contesting the acceptability of Work under the Contract Documents; or seeking other relief with respect to the Contract.

b. A demand or assertion by Contractor directly to Owner, duly submitted in compliance with the procedural requirements set forth herein, contesting Owner's decision regarding a Change Proposal.

c. A demand or assertion by Owner or Contractor, duly submitted in compliance with the procedural requirements set forth herein, made pursuant to Paragraph 12.01.A.4, concerning disputes arising after Owner has made a determination regarding Final Completion.

d. A demand for money or services by a third party is not a Claim.

11. *Constituents of Concern*—Asbestos, petroleum, radioactive materials, polychlorinated biphenyls (PCBs), lead-based paint (as defined by the HUD/EPA standard), hazardous waste, or any substance, product, waste, or other material of any nature whatsoever that is or becomes listed, regulated, or addressed pursuant to Laws and Regulations regulating, relating to, or imposing liability or standards of conduct concerning (a) pollution, (b) protection of human health or the environment, or (c) any hazardous, toxic, or otherwise dangerous waste, substance, or material.

12. *Contract*—The entire and integrated written contract between Owner and Contractor concerning the Work.

13. *Contract Documents*—Those items so designated in the Agreement, and that together comprise the Contract.

14. *Contract Price*—The money that Owner has agreed to pay Contractor in accordance with the Contract Documents.

15. *Contract Times*—The number of days or the dates by which Contractor shall: (a) achieve Milestones, if any; (b) achieve Substantial Completion; and (c) complete the Work, as such days or dates might be adjusted or modified under the Contract.

16. *Contractor*—The individual or entity with which Owner has contracted for performance of the Work.

17. *Contractor Parties*—Contractor, its Subcontractors, Suppliers, and anyone directly or indirectly employed, retained or contracted by any of them, and anyone for whose acts any of them is responsible or liable with respect to the Project.

18. *Cost of the Work*—See Paragraph 13.01 for definition.

19. *Critical Path*—The sequence and duration of activities of Work that control the duration of the Project.

20. *Drawings*—The part of the Contract Documents that graphically shows the scope, extent, and character of the Work to be performed by Contractor.

21. *Effective Date of the Contract*—The date, indicated in the Agreement, on which the Contract becomes effective.

Copyright© 2018 National Society of Professional Engineers, American Council of Engineering Companies, and American Society of Civil Engineers. All rights reserved.

22. *Electronic Document*—Any Project-related correspondence, attachments to correspondence, data, documents, drawings, information, or graphics, including but not limited to Shop Drawings and other Submittals, that are in an electronic or digital format.

23. *Electronic Means*—Electronic mail (email), upload/download from a secure Project website, or other communications methods that allow: (a) the transmission or communication of Electronic Documents; (b) the documentation of transmissions, including sending and receipt; (c) printing of the transmitted Electronic Document by the recipient; (d) the storage and archiving of the Electronic Document by sender and recipient; and (e) the use by recipient of the Electronic Document for purposes permitted by this Contract. Electronic Means does not include the use of text messaging, or of Facebook, Twitter, Instagram, or similar social media services for transmission of Electronic Documents.

24. *Engineer*—The individual or entity named as such in the Agreement.

25. *Field Order*—A written order issued by Owner that requires minor changes in the Work but does not change the Contract Price or the Contract Times.

26. *Final Completion*—The stage at which all of Contractor's obligations under the Contract Documents, and specifically under Paragraph 15.06, have been satisfied and final payment is due from Owner to Contractor. The terms "finally complete" and "finally completed" as applied to the Work refer to Final Completion.

27. *Hazardous Environmental Condition*—The presence at the Site of Constituents of Concern in such quantities or circumstances that might present a danger to persons or property exposed thereto.

    a. The presence at the Site of materials that are necessary for the performance of the Work, or that are to be incorporated into the Work, and that are controlled and contained pursuant to industry practices, Laws and Regulations, and the requirements of the Contract, is not a Hazardous Environmental Condition.

    b. The presence of Constituents of Concern that are to be removed or remediated as part of the Work is not a Hazardous Environmental Condition.

    c. The presence of Constituents of Concern that are part of the routine and obvious working conditions at the Site, is not a Hazardous Environmental Condition.

28. *Laws and Regulations; Laws or Regulations*—Any and all applicable laws, statutes, rules, regulations, ordinances, codes, and binding decrees, resolutions, and orders of any and all governmental bodies, agencies, authorities, and courts having jurisdiction.

29. *Liens*—Charges, liens, security interests, or encumbrances upon Contract-related funds, real property, or personal property.

30. *Milestone*—A principal event in the performance of the Work that the Contract requires Contractor to achieve by an intermediate completion date or by a time prior to Substantial Completion of all the Work.

31. *Notice of Award*—The written notice by Owner to a Bidder of Owner's acceptance of the Bid.

Copyright© 2018 National Society of Professional Engineers, American Council of Engineering Companies, and American Society of Civil Engineers. All rights reserved.

32. *Notice to Proceed*—A written notice by Owner to Contractor fixing the date on which the Contract Times shall commence to run and on which Contractor shall start to perform the Work.

33. *Owner*—The City of Franklin, Tennessee.

34. *Owner Parties*—Owner and its executives, officers, managers, board members, agents, and employees.

35. *Progress Schedule*—A schedule prepared and maintained by Contractor in accordance with the Contract, describing the sequence and duration of the activities comprising Contractor's obligation to accomplish the Work within the Contract Times.

36. *Project*—The total undertaking to be accomplished for Owner by engineers, contractors, and others, including planning, study, design, construction, testing, commissioning, and start-up, and of which the Work to be performed under the Contract Documents is a part.

37. *Samples*—Physical examples of materials, equipment, or workmanship that are representative of some portion of the Work and that establish the standards by which such portion of the Work shall be judged.

38. *Schedule of Submittals*—A schedule, prepared and maintained by Contractor in accordance with the Contract, of required submittals and the time requirements for review of the submittals.

39. *Schedule of Values*—A schedule, prepared and maintained by Contractor in accordance with the Contract, allocating portions of the Contract Price to various portions of the Work and used as the basis for reviewing Contractor's Applications for Payment.

40. *Shop Drawings*—All drawings, diagrams, illustrations, schedules, and other data or information specifically prepared or assembled by or for Contractor and submitted by Contractor to illustrate some portion of the Work. Shop Drawings, whether approved or not, are not Drawings and are not Contract Documents.

41. *Site*—Lands or areas indicated in the Contract Documents as being furnished by Owner upon which the Work is to be performed, including rights-of-way and easements, and such other lands or areas furnished by Owner designated for the use of Contractor.

42. *Specifications*—The part of the Contract that consists of written requirements for materials, equipment, systems, standards, and workmanship as applied to the Work, and certain administrative requirements and procedural matters applicable to the Work.

43. *Subcontractor*—An individual or entity having a direct contract with Contractor or with any other Subcontractor for the performance of a part of the Work.

44. *Submittal*—A written or graphic document, prepared by or for Contractor, that the Contract Documents require Contractor to submit to Owner, or that is indicated as a Submittal in the Schedule of Submittals. Submittals include but are not limited to Shop Drawings and Samples; product data; Owner-delegated designs; sustainable design information; information on special procedures; testing plans; results of tests and evaluations, source quality-control testing and inspections, and field or Site quality-control testing and inspections; certifications; Suppliers' instructions and reports; records of delivery of spare parts and tools; operations and maintenance data; Project

Copyright© 2018 National Society of Professional Engineers, American Council of Engineering Companies, and American Society of Civil Engineers. All rights reserved.

photographic documentation; record documents; and other such documents required by the Contract Documents. Submittals are not Contract Documents. Change Proposals, Change Orders, Claims, notices, Applications for Payment, and requests for interpretation or clarification are not Submittals.

45. *Substantial Completion*—The stage at which the Work (or a specified part thereof) has progressed to the point where, in the opinion of Owner, the Work (or a specified part thereof) is sufficiently complete in accordance with the Contract Documents, so that the Work (or a specified part thereof) can be fully utilized for the purposes for which it is intended. The terms "substantially complete" and "substantially completed" as applied to all or part of the Work refer to Substantial Completion of such Work. In addition to the foregoing, the Work shall not be considered to have achieved Substantial Completion until all of the following conditions have been met:

    a. All parking lots are in their final alignment, and the final wearing surface and all sidewalks, curbs, drainage features, markings, permanent safety appurtenances, lighting, traffic signals, and signing as shown in the Contract Documents have been installed.

    b. All buildings are complete and ready for occupancy to include the City of Franklin, TN issuing a Certificate of Occupancy on all structures.

    c. All public utilities and private utility services included as part of the Work have been appropriately installed and successfully passed all required testing.

    d. All final grading included as part of the Work is complete, and the Site has been 100% stabilized with permanent and temporary erosion and sediment control features.

    e. The value of all remaining Work is less than 2.5% of the Contract Price, and the remaining Work will not affect the safety or operations of any infrastructure or roadway, and will not significantly impact the public.

46. *Successful Bidder*—The Bidder to which the Owner makes an award of contract.

47. *Supplementary Conditions*—Any part of the Specifications that purports to amend or supplement these General Conditions. These General Conditions shall take precedence and control over any such Supplementary Conditions, except with respect to any written requirements for materials, equipment, systems, standards, and workmanship as applied to the Work.

48. *Supplier*—A manufacturer, fabricator, supplier, distributor, or vendor having a direct contract with Contractor or with any Subcontractor to furnish materials or equipment to be incorporated in the Work by Contractor or a Subcontractor.

49. *Technical Data*

    a. Those items expressly identified as Technical Data in the Agreement, with respect to (1) existing subsurface conditions at or adjacent to the Site, or existing physical conditions at or adjacent to the Site, including existing surface or subsurface structures (except Underground Facilities), and (2) Hazardous Environmental Conditions.

Copyright© 2018 National Society of Professional Engineers, American Council of Engineering Companies, and American Society of Civil Engineers. All rights reserved.

b. Data contained in boring logs, recorded measurements of subsurface water levels, assessments of the condition of subsurface facilities, laboratory test results, and other factual, objective information regarding conditions at the Site that are set forth in any geotechnical, environmental, or other Site or facilities conditions reports regarding the Site that are identified in the Contract Documents or otherwise made available to Contractor.

c. Information and data regarding the presence or location of Underground Facilities are not intended to be categorized, identified, or defined as Technical Data, and instead Underground Facilities are shown or indicated on the Drawings.

50. *Underground Facilities*—All active or not-in-service underground lines, pipelines, conduits, ducts, encasements, cables, wires, manholes, vaults, tanks, tunnels, or other such facilities or systems at the Site, including but not limited to those facilities or systems that produce, transmit, distribute, or convey telephone or other communications, cable television, fiber optic transmissions, power, electricity, light, heat, gases, oil, crude oil products, liquid petroleum products, water, steam, waste, wastewater, storm water, other liquids or chemicals, or traffic or other control systems. An abandoned facility or system is not an Underground Facility.

51. *Unit Price Work*—Work to be paid for on the basis of unit prices.

52. *Work*—The entire construction, including the various separately identifiable parts thereof, required to be provided under the Contract Documents. Work includes and is the result of, without limitation, performing or providing all labor, services, and documentation necessary to produce such construction; furnishing, installing, and incorporating all materials and equipment into such construction; and might include, without limitation, related services such as testing, start-up, and commissioning, all as required by the Contract Documents.

53. *Work Change Directive*—A written directive to Contractor issued on or after the Effective Date of the Contract, signed by Owner, ordering an addition, deletion, or revision in the Work.

1.02 *Terminology*

A. The words and terms discussed in Paragraphs 1.02.B, C, D, and E are not defined terms that require initial capital letters, but, when used in the Bidding Requirements or Contract Documents, have the indicated meaning.

B. *Intent of Certain Terms*

1. The Contract Documents include the terms "as allowed," "as approved," "as ordered," "as directed" or terms of like effect or import to authorize an exercise of judgment by Owner. In addition, the adjectives "reasonable," "suitable," "acceptable," "proper," "satisfactory," or adjectives of like effect or import are used to describe an action or determination of Owner as to the Work. It is intended that such exercise of judgment, action, or determination shall be solely to evaluate, in general, the Work for compliance with the information in the Contract Documents and with the design concept of the Project as a functioning whole as shown or indicated in the Contract Documents (unless there is a specific statement indicating otherwise). The use of any such term or adjective is not intended to and shall not be effective to assign to Owner any duty or authority to

Copyright© 2018 National Society of Professional Engineers, American Council of Engineering Companies, and American Society of Civil Engineers. All rights reserved.

supervise or direct the performance of the Work, or any duty or authority to undertake responsibility contrary to the provisions of Article 10 or any other provision of the Contract Documents.

2. The Contract Documents frequently omit modifying words such as "all" and "any," and articles such as "the" and "an," but the fact that a modifier or an article is absent from one statement and appears in another is not intended to affect the interpretation of either statement. When used in the Contract Documents, unless the context clearly dictates otherwise, (1) the singular shall include the plural, and vice versa, (2) the use of the masculine, feminine or neuter gender shall include all other genders, as appropriate, and (3) the disjunctive "or" shall include the conjunctive "and," and vice versa.

C. *Day*: Except as otherwise specifically stated, the word "day" means a calendar day of 24 hours measured from midnight to the next midnight.

D. *Defective*: The word "defective," when modifying the word "Work," refers to Work that is unsatisfactory, faulty, or deficient in that it:

1. does not conform to the Contract Documents;

2. does not meet the requirements of any applicable inspection, reference standard, test, or approval referred to in the Contract Documents; or

3. has been damaged prior to final payment (unless responsibility for the protection thereof has been assumed by Owner at Substantial Completion in accordance with Paragraph 15.03 or Paragraph 15.04).

E. *Furnish, Install, Perform, Provide*

1. The word "furnish," when used in connection with services, materials, or equipment, means to supply and deliver said services, materials, or equipment to the Site (or some other specified location approved by Owner) ready for use or installation and in usable or operable condition.

2. The word "install," when used in connection with services, materials, or equipment, means to put into use or place in final position said services, materials, or equipment complete and ready for intended use.

3. The words "perform" or "provide," when used in connection with services, materials, or equipment, mean to furnish and install said services, materials, or equipment complete and ready for intended use.

4. If the Contract Documents establish an obligation of Contractor with respect to specific services, materials, or equipment, but do not expressly use any of the four words "furnish," "install," "perform," or "provide," then Contractor shall furnish and install said services, materials, or equipment complete and ready for intended use.

F. *Contract Price or Contract Times*: References to a change in "Contract Price or Contract Times" or "Contract Times or Contract Price" or similar, indicate that such change applies to (1) Contract Price, (2) Contract Times, or (3) both Contract Price and Contract Times, each as reasonably determined by Owner, even if the term "or both" is not expressed.

Copyright© 2018 National Society of Professional Engineers, American Council of Engineering Companies, and American Society of Civil Engineers. All rights reserved.

G. *Set-Off:* As used in the Contract Documents, Owner's right to impose a "set-off" also includes, without limitation, Owner's right to payment and recovery of the pertinent amount from Contractor.

H. Unless stated otherwise in the Contract Documents, words or phrases that have a well-known technical or construction industry or trade meaning are used in the Contract Documents in accordance with such recognized meaning.

ARTICLE 2—PRELIMINARY MATTERS

2.01 *Delivery of Performance and Payment Bonds; Evidence of Insurance*

A. *Performance and Payment Bonds*: When Contractor delivers the signed counterparts of the Agreement to Owner, Contractor shall also deliver to Owner the performance bond and payment bond (if the Contract requires Contractor to furnish such bonds).

B. *Evidence of Contractor's Insurance*: When Contractor delivers the signed counterparts of the Agreement to Owner, Contractor shall also deliver to Owner, with copies to each additional insured (as identified in the Contract), the policies, certificates, endorsements, and other evidence of insurance required to be provided by Contractor in accordance with Article 6.

2.02 *Copies of Documents*

A. Owner shall furnish to Contractor one fully signed counterpart of the Agreement, and one copy in electronic portable document format (PDF).

B. Owner shall maintain and safeguard at least one original printed version of the Contract, including Drawings and Specifications signed and sealed by Engineer and other design professionals. Owner shall make such original printed version of the Contract available to Contractor for review.

2.03 *Before Starting Construction*

A. *Preliminary Schedules*: Within 10 days after the Effective Date of the Contract (or as otherwise required by the Contract Documents), Contractor shall submit to Owner for timely review a preliminary schedule including:

1. The Critical Path.
2. The planned start and completion dates for each activity, the duration of each activity, and the sequencing of all activities. If activities have durations of more than one updated period, break the activities into two or more activities distinguished by location or some other feature.
3. Dates related to the procurement of materials, equipment and articles of special manufacture; and dates related to the submission of working drawings, plans and other data specified for review or approval by Owner.
4. Dates related to key Owner inspections.
5. Dates related to specified activities by the Owner and third parties, and times for starting and completing the various stages of Work, including but not limited to all Milestones specified in the Contract.
6. A preliminary Schedule of Submittals.

Copyright© 2018 National Society of Professional Engineers, American Council of Engineering Companies, and American Society of Civil Engineers. All rights reserved.

7. A preliminary Schedule of Values for all of the Work, which includes quantities and prices of items that, when added together, equal the Contract Price, and which subdivides the Work into component parts in sufficient detail to serve as the basis for progress payments during performance of the Work. Such prices shall include an appropriate amount of overhead and profit applicable to each item of Work.

2.04 *Preconstruction Conference; Designated Representatives*

A. Before any Work at the Site is started, a conference attended by Owner, Contractor, Engineer, and others as appropriate shall be held to establish a working understanding among the parties as to the Work, and to discuss the schedules referred to in Paragraph 2.03.A, procedures for handling Shop Drawings, Samples, and other Submittals, processing Applications for Payment, electronic or digital transmittals, and maintaining required records.

B. Owner's and Contractor's Designated Representatives are those individuals identified as such in the Agreement. Subject to Paragraph 9.01 with respect to Owner, each party's Designated Representative is authorized to act as its authorized representative with respect to the services and responsibilities under the Contract. Subject to Paragraph 9.01 with respect to Owner, such individuals shall have the authority to transmit and receive information, render decisions relative to the Contract, and otherwise act on behalf of each respective party.

2.05 *Acceptance of Schedules*

A. At least 10 days before submission of the first Application for Payment, a conference, attended by Owner, Contractor, Engineer, and others as appropriate, shall be held to review the schedules submitted in accordance with Paragraph 2.03.A. No progress payment shall be made to Contractor until acceptable schedules are submitted to Owner in accordance with the following:

1. The Progress Schedule shall provide for an orderly progression of the Work to completion within the Contract Times.

2. Contractor's Schedule of Submittals shall provide a workable arrangement for reviewing and processing the required Submittals.

3. Contractor's Schedule of Values shall provide for a reasonable allocation of the Contract Price to the component parts of the Work.

4. If a schedule is not acceptable to Owner, Contractor shall have an additional 10 days to revise and resubmit the schedule. Acceptance of a schedule by Owner shall not impose on Owner responsibility for sequencing, scheduling, or progress of the Work, and shall not relieve Contractor from Contractor's full responsibility therefor.

2.06 *Electronic Transmittals*

A. Except as otherwise stated elsewhere in the Contract, the Owner, Engineer, and Contractor may send, and shall accept, Electronic Documents transmitted by Electronic Means.

B. If the Contract does not establish protocols for Electronic Means, then Owner, Engineer, and Contractor shall jointly develop such protocols.

C. Subject to any governing protocols for Electronic Means, when transmitting Electronic Documents by Electronic Means, the transmitting party makes no representations as to long-term compatibility, usability, or readability of the Electronic Documents resulting from the

Copyright© 2018 National Society of Professional Engineers, American Council of Engineering Companies, and American Society of Civil Engineers. All rights reserved.

recipient's use of software application packages, operating systems, or computer hardware differing from those used in the drafting or transmittal of the Electronic Documents.

D. Notwithstanding anything in this Paragraph 2.06, all notices shall be sent as set forth in Paragraph 18.01.

ARTICLE 3—CONTRACT DOCUMENTS: INTENT, REQUIREMENTS, REUSE

3.01 *Intent*

A. The Contract Documents are complementary; what is required by one Contract Document is as binding as if required by all.

B. It is the intent of the Contract Documents to describe and require a functionally complete Project to be constructed in accordance with the Contract Documents.

C. Unless otherwise stated in the Contract Documents, if there is a discrepancy between the electronic versions of the Contract Documents (including any printed copies derived from such electronic versions) and the printed record version, the printed record version shall govern.

D. The Contract supersedes prior negotiations, representations, and agreements, whether written or oral.

E. Owner or Engineer shall issue clarifications and interpretations of the Contract Documents as provided herein.

F. Any provision or part of the Contract Documents held to be void or unenforceable under any Law or Regulation shall be deemed stricken, and all remaining provisions shall continue to be valid and binding upon Owner and Contractor, which agree that the Contract Documents shall be reformed to replace such stricken provision or part thereof with a valid and enforceable provision that comes as close as possible to expressing the intention of the stricken provision.

G. Nothing in the Contract Documents creates:

1. any rights or claims against Owner or any other Owner Parties in favor of Engineer, any Subcontractor, Supplier, or other individual or entity performing or furnishing any of the Work, or any other individual or entity not a party to the Contract; or

2. any obligation on the part of Owner or Engineer to pay or to see to the payment of any money due any such Subcontractor, Supplier, or other individual or entity, except as otherwise required by Laws and Regulations.

3.02 *Reference Standards*

A. *Standards Specifications, Codes, Laws and Regulations*

1. Reference in the Contract Documents to standard specifications, manuals, reference standards, or codes of any technical society, organization, or association, or to Laws or Regulations, whether such reference be specific or by implication, means the standard specification, manual, reference standard, code, or Laws or Regulations in effect at the time of opening of Bids (or on the Effective Date of the Contract if there were no Bids), except as otherwise specifically stated in the Contract Documents.

Copyright© 2018 National Society of Professional Engineers, American Council of Engineering Companies, and American Society of Civil Engineers. All rights reserved.

2. No such provision or instruction shall be effective to assign to Owner or Engineer any duty or authority to supervise or direct the performance of the Work, or any duty or authority to undertake responsibility inconsistent with the Contract Documents.

3.03 *Reporting and Resolving Discrepancies*

A. *Reporting Discrepancies*

1. *Contractor's Verification of Figures and Field Measurements*: Before undertaking each part of the Work, Contractor shall examine and carefully study the Contract Documents, and check and verify pertinent figures and dimensions therein, particularly with respect to applicable field measurements. Contractor shall promptly report in writing to Owner any conflict, error, ambiguity, or discrepancy that Contractor discovers, or has actual knowledge of, and shall not proceed with any Work affected thereby until the conflict, error, ambiguity, or discrepancy is resolved by a clarification or interpretation from Owner, or by an amendment or supplement to the Contract issued pursuant to Paragraph 11.01.

2. *Contractor's Review of Contract Documents*: If, before or during the performance of the Work, Contractor discovers any conflict, error, ambiguity, or discrepancy within the Contract Documents, or between the Contract Documents and (a) any applicable Law or Regulation, (b) actual field conditions, (c) any standard specification, manual, reference standard, or code, or (d) any instruction of any Supplier, then Contractor shall promptly report it to Owner in writing. Contractor shall not proceed with the Work affected thereby (except in an emergency as required by Paragraph 7.15) until the conflict, error, ambiguity, or discrepancy is resolved, by a clarification or interpretation from Owner, or by an amendment or supplement to the Contract issued pursuant to Paragraph 11.01.

3. Contractor shall not be liable to Owner or Engineer for failure to report any conflict, error, ambiguity, or discrepancy in the Contract Documents unless Contractor had actual knowledge thereof.

B. *Resolving Discrepancies*

1. Except as otherwise specifically stated in the Contract Documents, the provisions of the part of the Contract Documents prepared by or for Engineer take precedence in resolving any conflict, error, ambiguity, or discrepancy between such provisions of the Contract Documents and:

   a. the provisions of any standard specification, manual, reference standard, or code, or the instruction of any Supplier (whether or not specifically incorporated by reference as a Contract Document); or

   b. the provisions of any Laws or Regulations applicable to the performance of the Work (unless such an interpretation of the provisions of the Contract Documents would result in violation of such Law or Regulation).

3.04 *Requirements of the Contract Documents*

A. During the performance of the Work and until Final Completion, Contractor shall submit to Owner in writing all matters in question concerning the requirements of the Contract Documents (sometimes referred to as requests for information or interpretation—RFIs), or relating to the acceptability of the Work under the Contract Documents, as soon as possible

Copyright© 2018 National Society of Professional Engineers, American Council of Engineering Companies, and American Society of Civil Engineers. All rights reserved.

after such matters arise. Owner shall be the initial interpreter of the requirements of the Contract Documents, and judge of the acceptability of the Work.

B. Owner shall, with reasonable promptness, render or cause to be rendered a written clarification, interpretation, or decision on the issue submitted, or initiate an amendment or supplement to the Contract Documents. Such written clarification, interpretation, or decision shall be final and binding on Contractor, unless it appeals by submitting a Change Proposal.

C. If a submitted matter in question concerns the Contract Documents and Owner and Contractor are unable to agree on resolution of such a matter in question, either party may pursue resolution as provided in Article 12.

3.05 *Reuse of Documents*

A. Contractor and its Subcontractors and Suppliers shall not:

1. have or acquire any title to or ownership rights in any of the Drawings, Specifications, or other documents (or copies of any thereof) prepared by or bearing the seal of Engineer or its consultants, including but not limited to electronic media versions, or reuse any such Drawings, Specifications, other documents, or copies thereof on extensions of the Project or any other project without written consent of Owner and Engineer and specific written verification or adaptation by Engineer; or

2. have or acquire any title or ownership rights in any other Contract Documents, reuse any such Contract Documents for any purpose without Owner's express written consent, or violate any copyrights pertaining to such Contract Documents.

B. The prohibitions of this Paragraph 3.05 shall survive Final Completion or earlier termination of the Contract. Nothing herein precludes Contractor from retaining copies of the Contract Documents for record purposes.

ARTICLE 4—COMMENCEMENT AND PROGRESS OF THE WORK

4.01 *Commencement of Contract Times; Notice to Proceed*

A. Unless the Contract states otherwise, the Contract Times shall commence to run on the day indicated in the Notice to Proceed. A Notice to Proceed may be given at any time within 60 days after the Effective Date of the Contract. In no event shall the Contract Times commence to run later than the actual commencement of the Work on the Project.

4.02 *Starting the Work*

A. Unless the Contract states otherwise, Contractor shall start to perform the Work on the date indicated in the Notice to Proceed. No Work may be done at the Site prior to such date.

4.03 *Reference Points*

A. Owner shall provide engineering surveys to establish reference points for construction if reasonably necessary to enable Contractor to proceed with the Work. Contractor shall be responsible for laying out the Work, shall protect and preserve the established reference points and property monuments, and shall make no changes or relocations without the prior written approval of Owner. Contractor shall report to Owner whenever any reference point or property monument is lost or destroyed or requires relocation because of necessary changes in grades or locations, and shall be responsible for the accurate replacement or

Copyright© 2018 National Society of Professional Engineers, American Council of Engineering Companies, and American Society of Civil Engineers. All rights reserved.

relocation of such reference points or property monuments by professionally qualified personnel.

4.04 *Progress Schedule*

A. Contractor shall adhere to the Progress Schedule established in accordance with Paragraph 2.05 as it is adjusted from time to time as follows:

1. Contractor shall submit to Owner for acceptance (to the extent indicated in Paragraph 2.05) proposed adjustments in the Progress Schedule that will not result in changing the Contract Times.

2. Proposed adjustments in the Progress Schedule that will change the Contract Times shall be submitted in accordance with the requirements of Article 11.

B. Contractor shall carry on the Work and adhere to the Progress Schedule during all disputes or disagreements with Owner. No Work shall be delayed or postponed pending resolution of any disputes or disagreements, or during any appeal process, except as permitted by Paragraph 16.04, or as Owner and Contractor otherwise agree in writing.

4.05 *Delays in Contractor's Progress*

A. If Owner, Engineer, or anyone for whom Owner is responsible unreasonably delays, disrupts, or interferes with Contractor's performance or progress of the Work associated with the Critical Path, as shown on the Contractor's then-current Progress Schedule, then Contractor shall be entitled to an adjustment in the Contract Price or Contract Times, but only to the extent the delay, disruption, or interference affects Contractor's cost of, or time required for, performance of the Work, as reasonably determined by Owner. Contractor shall not be entitled to an adjustment in Contract Price for any delay, disruption, or interference if such delay is concurrent with a delay, disruption, or interference caused by or within the control of any of the Contractor Parties. Such a concurrent delay by Contractor shall not preclude an adjustment of Contract Times to which Contractor is otherwise entitled under the Contract, to the extent such concurrent delay is not caused by any of the Contractor Parties.

B. In any event, Contractor shall not be entitled to an adjustment in Contract Price or Contract Times for delay, disruption, or interference caused by or within the control of any of the Contractor Parties.

C. If Contractor's performance or progress is delayed, disrupted, or interfered with by unanticipated causes not the fault of and beyond the control of Owner, Contractor, and those for which they are responsible, then Contractor shall be entitled to an adjustment in Contract Times, but only to the extent the delay, disruption, or interference affects Contractor's cost of, or time required for, performance of the Work, as reasonably determined by Owner. Causes of delay, disruption, or interference that might give rise to an adjustment in Contract Times under this paragraph include the following:

1. Severe and unavoidable natural catastrophes such as fires, floods, epidemics, and earthquakes;

2. Abnormal weather conditions;

3. Acts or failures to act of third-party utility owners or other third-party entities (other than those third-party utility owners or other third-party entities performing other work at or

Copyright© 2018 National Society of Professional Engineers, American Council of Engineering Companies, and American Society of Civil Engineers. All rights reserved.

adjacent to the Site as arranged by or under contract with Owner, as contemplated in Article 8); and

4. Acts of war or terrorism.

5. *Weather-Related Delays*

   a. If "abnormal weather conditions" as set forth in Paragraph 4.05.C.2 are the basis for a request for an adjustment in the Contract Times, such request shall be documented by data substantiating each of the following: 1) that weather conditions were abnormal for the period of time in which the delay occurred, 2) that such weather conditions could not have been reasonably anticipated, and 3) that such weather conditions had an adverse effect on the Critical Path.

   b. The existence of abnormal weather conditions shall be determined on a month-by-month basis in accordance with the following:

      1) Every week day (excluding legal holidays) in a given month that exceeds the number of Foreseeable Bad Weather Days set forth in the table in Paragraph 4.05.C.5.b.3, and on which the following conditions exist, shall be considered a "bad weather day":

         A) Total precipitation (as rain equivalent) occurring between 7:00 p.m. on the preceding day through 7:00 p.m. on the day in question equals or exceeds 0.10-inch of precipitation as rain equivalent.

         B) Dry-out or mud days, at a rate no greater than 1 make-up for each day or consecutive days of rain that total 1.0 inch or more, liquid measure.

      2) Determination of actual bad weather days during performance of the Work shall be based on the weather records measured and recorded by the National Oceanic and Atmospheric Administration's National Centers for Environmental Information weather monitoring station located at the Franklin Sewage Plant, Franklin, TN, or another method approved in advance by Owner if specifically stated elsewhere in the Contract Documents.

      3) The Contract Times include the number of Foreseeable Bad Weather Days per month indicated in the following table:

Foreseeable Bad Weather Days	
Month	**Days**
January	8
February	9
March	9
April	9
May	9

Copyright© 2018 National Society of Professional Engineers, American Council of Engineering Companies, and American Society of Civil Engineers. All rights reserved.

June	8
July	9
August	7
September	7
October	6
November	7
December	9

4) The existence of abnormal weather conditions shall not relieve Contractor of the obligation to demonstrate and document that delays caused by abnormal weather are specific to the planned work activities and that such activities thus delayed were on the Critical Path. Saturdays, Sundays, and legal holidays shall not constitute lost work days unless the Contract Documents specifically require it or Owner directs Contractor to work those days.

D. Contractor's entitlement to an adjustment of Contract Times or, if applicable, Contract Price, is limited as follows:

1. Contractor's entitlement to an adjustment of the Contract Times is conditioned on the delay, disruption, or interference adversely affecting an activity on the Critical Path, as of the time of the delay, disruption, or interference.

2. Adjustments of Contract Times or Contract Price are subject to the provisions of Article 11.

E. Each Contractor request or Change Proposal seeking an increase in Contract Times or, if applicable, Contract Price shall be supplemented by supporting data that sets forth in detail the following:

1. The circumstances that form the basis for the requested adjustment;

2. The date upon which each cause of delay, disruption, or interference began to affect the progress of the Work;

3. The number of days' increase in Contract Times claimed as a consequence of each such cause of delay, disruption, or interference; and

4. The impact on Contract Price, in accordance with the provisions of Paragraph 11.07.

Contractor shall also furnish such additional supporting documentation as Owner requires, including but not limited to where appropriate, a revised progress schedule indicating all the activities affected by the delay, disruption, or interference, and an explanation of the effect of the delay, disruption, or interference on the Critical Path.

F. Delays, disruption, and interference to the performance or progress of the Work resulting from the existence of a differing subsurface or physical condition, an Underground Facility

Copyright© 2018 National Society of Professional Engineers, American Council of Engineering Companies, and American Society of Civil Engineers. All rights reserved.

that was not shown or indicated by the Contract Documents, or one not shown or indicated with reasonable accuracy, and those resulting from Hazardous Environmental Conditions, are governed by Article 5, together with the provisions of Paragraphs 4.05.D and 4.05.E.

G. Paragraph 8.03 addresses delays, disruption, and interference to the performance or progress of the Work resulting from the performance of certain other work at or adjacent to the Site.

H. Except as specifically set forth in the Contract, an adjustment of the Contract Times shall be Contractor's sole and exclusive remedy for any delay, disruption, interference, hindrance or obstruction in Contractor's commencement, performance or completion of the Work, loss of productivity, or other similar claims (collectively "Delays"), whether or not such Delays are foreseeable. In no event shall Contractor be entitled to any compensation or recovery of any damages in connection with any Delays, including but not limited to actual damages, consequential damages, lost opportunity costs, impact damages, extended general conditions, or other similar costs or damages. Owner's exercise of any of its rights or remedies under the Contract, including but not limited to ordering changes in the Work, directing suspension of the Work, rescheduling, correction of the Work, or terminating the Contract for convenience, regardless of the extent or frequency of such exercise, shall not be construed as a delay, disruption, or interference with Contractor's performance or progress of the Work under Paragraph 4.05.A.

ARTICLE 5—SITE; SUBSURFACE AND PHYSICAL CONDITIONS; HAZARDOUS ENVIRONMENTAL CONDITIONS

5.01 *Availability of Lands*

A. Owner shall furnish the Site. Owner shall notify Contractor in writing of any known encumbrances or restrictions not of general application but specifically related to use of the Site with which Contractor shall comply in performing the Work.

B. Upon reasonable written request, Owner shall furnish Contractor with a current statement of record legal title and legal description of the lands upon which permanent improvements are to be made and Owner's interest therein.

C. If necessary for timely and proper performance of the Work, Contractor shall arrange for use of and access to all additional lands required for temporary construction facilities and storage of materials and equipment.

5.02 *Use of Site and Other Areas*

A. *Limitation on Use of Site and Other Areas*

1. Contractor shall confine construction equipment, temporary construction facilities, the storage of materials and equipment, and the operations of workers to the Site, adjacent areas that Contractor has arranged to use or access through construction easements or otherwise, and other adjacent areas permitted by Laws and Regulations, and shall not unreasonably encumber the Site and such other adjacent areas with construction equipment or other materials or equipment. Contractor shall assume full responsibility for (a) damage to the Site; (b) damage to any areas used for Contractor's operations; (c) damage to any other land or areas, or to improvements, structures, utilities, or similar facilities; and (d) for injuries and losses sustained by the owners or occupants of any such

Copyright© 2018 National Society of Professional Engineers, American Council of Engineering Companies, and American Society of Civil Engineers. All rights reserved.

land or areas; provided that such damage or injuries result from the performance of the Work or from other actions or conduct of any of the Contractor Parties.

2. If a damage or injury claim is made by the owner or occupant of any such land or area because of the performance of the Work, or because of other actions or conduct of any of the Contractor Parties, Contractor shall (a) take immediate corrective or remedial action as required by Paragraph 7.13, or otherwise; (b) promptly attempt to settle the claim as to all parties through negotiations with such owner or occupant, or otherwise resolve the claim by arbitration or other dispute resolution proceeding, or in a court of competent jurisdiction; and (c) to the full extent permitted by Laws and Regulations, defend (at Owner's option in its sole discretion), indemnify and hold harmless the Owner Parties and Engineer, and the consultants and subcontractors of each and any of them, from and against all such claims, and against all costs, losses, and damages (including but not limited to all fees and charges of engineers, architects, attorneys, and other professionals and all court or arbitration or other dispute resolution costs) arising out of or relating to any claim or action, legal or equitable, brought by any such owner or occupant against any of the Owner Parties, Engineer, or any other party indemnified hereunder to the extent caused directly or indirectly, in whole or in part by, or based upon, performance of the Work, or because of other actions or conduct of any of the Contractor Parties.

B. *Removal of Debris During Performance of the Work*: During the progress of the Work the Contractor shall keep the Site and other adjacent areas free from accumulations of waste materials, rubbish, and other debris. Removal and disposal of such waste materials, rubbish, and other debris shall conform to applicable Laws and Regulations.

C. *Cleaning*: Prior to Substantial Completion of the Work Contractor shall clean the Site and the Work and make it ready for utilization by Owner. Upon completion of the Work at the Site, Contractor shall remove from the Site and adjacent areas all tools, appliances, construction equipment and machinery, and surplus materials and shall restore to original condition all property not designated for alteration by the Contract Documents.

D. *Loading of Structures*: Contractor shall not load nor permit any part of any structure to be loaded in any manner that will endanger the structure, its contents or any person, nor shall Contractor subject any part of the Work or adjacent structures or land to stresses or pressures that will endanger them or any contents or persons.

5.03 *Subsurface and Physical Conditions*

A. *Underground Facilities*: Information and data regarding the presence or location of Underground Facilities are not intended to be categorized, identified, or defined as Technical Data.

B. *Reliance by Contractor on Technical Data*: Contractor may reasonably rely upon the accuracy of Technical Data.

C. *Limitations of Other Data and Documents*: Except for such reliance on Technical Data, Contractor may not rely upon or make any claim against any of the Owner Parties or Engineer, or any of their consultants or contractors, with respect to:

1. the completeness of such reports and drawings for Contractor's purposes, including but not limited to any aspects of the means, methods, techniques, sequences, and procedures

Copyright© 2018 National Society of Professional Engineers, American Council of Engineering Companies, and American Society of Civil Engineers. All rights reserved.

of construction to be employed by Contractor, and safety precautions and programs incident thereto;

2. other data, interpretations, opinions, and information contained in such reports or shown or indicated in such drawings;

3. the contents of other Site-related documents made available to Contractor, such as record drawings from other projects at or adjacent to the Site, or Owner's archival documents concerning the Site; or

4. any Contractor interpretation of or conclusion drawn from any Technical Data or any such other data, interpretations, opinions, or information.

5.04 *Differing Subsurface or Physical Conditions*

A. *Notice by Contractor*: If Contractor believes that any subsurface or physical condition that is uncovered or revealed at the Site:

1. is of such a nature as to establish that any Technical Data on which Contractor is entitled to reasonably rely as provided in Paragraph 5.03 is materially inaccurate;

2. is of such a nature as to require a change in the Drawings or Specifications;

3. differs materially from that shown or indicated in the Contract Documents; or

4. is of an unusual nature, and differs materially from conditions ordinarily encountered and generally recognized as inherent in work of the character provided for in the Contract Documents;

then Contractor shall, promptly after becoming aware thereof and before further disturbing the subsurface or physical conditions or performing any Work in connection therewith (except in an emergency as required by Paragraph 7.15), notify Owner in writing about such condition. Contractor shall not further disturb such condition or perform any Work in connection therewith (except with respect to an emergency) until the Owner has a reasonable opportunity to review the subsurface or physical condition in question.

B. *Owner's Review*: After receipt of written notice as required by the preceding paragraph, Owner shall promptly review the subsurface or physical condition in question; determine whether it is necessary to obtain additional exploration or tests with respect to the condition; conclude whether the condition falls within any one or more of the differing site condition categories in Paragraph 5.04.A; and obtain any pertinent cost or schedule information from Contractor.

C. *Owner's Statement to Contractor Regarding Site Condition*: Owner shall issue a written statement to Contractor regarding the subsurface or physical condition in question, addressing the resumption of Work in connection with such condition, and indicating whether any change in the Drawings or Specifications will be made.

D. *Early Resumption of Work*: If at any time Owner determines that Work in connection with the subsurface or physical condition in question may resume prior to completion of Owner's review or issuance of its statement to Contractor, because the condition in question has been adequately documented, and analyzed on a preliminary basis, then Owner may at its discretion instruct Contractor to resume such Work.

Copyright© 2018 National Society of Professional Engineers, American Council of Engineering Companies, and American Society of Civil Engineers. All rights reserved.

E. *Possible Price and Times Adjustments*

1. Contractor shall be entitled to an adjustment in Contract Times, and might be entitled to an adjustment in Contract Price (excluding any overhead or profit), each as reasonably determined by Owner, to the extent that the existence of a differing subsurface or physical condition, or any related delay, disruption, or interference, causes an increase or decrease in Contractor's cost of, or time required for, performance of the Work; subject, however, to the following:

   a. Such condition falls within one or more of the categories described in Paragraph 5.04.A;

   b. With respect to Work that is paid for on a unit price basis, any adjustment in Contract Price shall be subject to the provisions of Paragraph 13.03; and,

   c. Contractor's entitlement to an adjustment of the Contract Times is subject to the provisions of Paragraphs 4.05.D and 4.05.E.

2. Contractor shall not be entitled to any adjustment in the Contract Price or Contract Times with respect to a subsurface or physical condition if:

   a. Contractor knew of the existence of such condition at the time Contractor made a commitment to Owner with respect to Contract Price and Contract Times by the submission of a Bid, or otherwise;

   b. The existence of such condition reasonably could have been discovered or revealed as a result of any examination, investigation, exploration, test, or study of the Site and contiguous areas expressly required by the Bidding Requirements or Contract Documents to be conducted by or for Contractor; or

   c. Contractor failed to give the written notice required by Paragraph 5.04.A.

3. If Owner and Contractor agree regarding Contractor's entitlement to and the amount or extent of any adjustment in the Contract Price or Contract Times, then any such adjustment shall be set forth in a Change Order.

4. Contractor may submit a Change Proposal regarding its entitlement to or the amount or extent of any adjustment in the Contract Price or Contract Times no later than 14 days after Owner's issuance of the Owner's written statement to Contractor regarding the subsurface or physical condition in question.

F. *Human Remains; Artifacts.* If, in the course of the Work, Contractor encounters or recognizes the existence of human remains, burial markers, archaeological sites, historic sites or artifacts, or wetlands not indicated in the Contract Documents, Contractor shall immediately suspend any operations that would affect them and notify Owner. Upon receipt of such notice, Owner shall promptly take action to obtain any governmental authorization required to resume the operations. Contractor shall continue to suspend such operations until otherwise instructed by Owner in writing, but shall continue with all other operations that do not affect those remains or features. Any requests for adjustments in the Contract Price or Contract Times arising from the existence of such remains or features shall be governed by the foregoing provisions of this Paragraph 5.04.

Copyright© 2018 National Society of Professional Engineers, American Council of Engineering Companies, and American Society of Civil Engineers. All rights reserved.

G. *Underground Facilities; Hazardous Environmental Conditions*: Paragraph 5.05 governs rights and responsibilities regarding the presence or location of Underground Facilities. Paragraph 5.06 governs rights and responsibilities regarding Hazardous Environmental Conditions. The provisions of Paragraphs 5.03 and 5.04 are not applicable to the presence or location of Underground Facilities or to Hazardous Environmental Conditions.

5.05 *Underground Facilities*

A. *Contractor's Responsibilities*: The cost of all of the following are included in the Contract Price, and Contractor shall have full responsibility for:

1. reviewing and checking all information and data regarding existing Underground Facilities at the Site;
2. complying with applicable state and local utility damage prevention Laws and Regulations;
3. verifying the actual location of those Underground Facilities shown or indicated in the Contract Documents as being within the area affected by the Work, by exposing such Underground Facilities during the course of construction;
4. coordination of the Work with the owners (including Owner) of such Underground Facilities, during construction; and
5. the safety and protection of all existing Underground Facilities at the Site, and repairing any damage thereto resulting from the Work.

B. *Notice by Contractor*: If Contractor believes that an Underground Facility that is uncovered or revealed at the Site was not shown or indicated on the Drawings, or was not shown or indicated on the Drawings with reasonable accuracy, then Contractor shall, promptly after becoming aware thereof and before further disturbing conditions affected thereby or performing any Work in connection therewith (except in an emergency as required by Paragraph 7.15), notify Owner in writing regarding such Underground Facility.

C. *Owner's Review*: After receipt of such notice, Owner shall:

1. promptly review the Underground Facility and conclude whether such Underground Facility was not shown or indicated on the Drawings, or was not shown or indicated with reasonable accuracy;
2. identify and communicate with the owner of the Underground Facility; and, if necessary, issue any preliminary instructions to Contractor regarding the Contractor's resumption of Work in connection with the Underground Facility in question; and
3. obtain any pertinent schedule information from Contractor; determine the extent, if any, to which a change is required in the Drawings or Specifications to reflect and document the consequences of the existence or location of the Underground Facility.

During such time, Contractor shall be responsible for the safety and protection of such Underground Facility.

D. *Owner's Statement to Contractor Regarding Underground Facility*: Owner shall issue a written statement to Contractor regarding the Underground Facility in question, addressing the resumption of Work in connection with such Underground Facility, and indicating whether any change in the Drawings or Specifications will be made.

Copyright© 2018 National Society of Professional Engineers, American Council of Engineering Companies, and American Society of Civil Engineers. All rights reserved.

E. *Early Resumption of Work*: If at any time Owner determines that Work in connection with the Underground Facility may resume prior to completion of Owner's review or issuance of its statement to Contractor, because the Underground Facility in question and conditions affected by its presence have been adequately documented, and analyzed on a preliminary basis, then the Owner may at its discretion instruct Contractor to resume such Work.

F. *Possible Time Adjustments*

1. Contractor shall be entitled to an adjustment in the Contract Times, but no adjustment in Contract Price, as reasonably determined by Owner, to the extent any existing Underground Facility at the Site that was not shown or indicated on the Drawings, or was not shown or indicated with reasonable accuracy, or any related delay, disruption, or interference, causes an increase or decrease in Contractor's time required for performance of the Work; subject, however, to the following:

   a. Contractor's entitlement to an adjustment of the Contract Times is subject to the provisions of Paragraphs 4.05.D and 4.05.E; and

   c. Contractor gave the notice required in Paragraph 5.05.B.

2. If Owner and Contractor agree regarding Contractor's entitlement to and the extent of any adjustment in the Contract Times, then any such adjustment shall be set forth in a Change Order.

3. Contractor may submit a Change Proposal regarding its entitlement to or the extent of any adjustment in the Contract Times, no later than 14 days after Owner's issuance of the Owner's written statement to Contractor regarding the Underground Facility in question.

5.06 *Hazardous Environmental Conditions*

A. *Reliance by Contractor on Technical Data Authorized*: Contractor may reasonably rely upon the accuracy of the Technical Data. Except for such reliance on Technical Data, Contractor may not rely upon or make any claim against any of the Owner Parties or Engineer, or any of their consultants or subcontractors, with respect to:

1. the completeness of such reports and drawings for Contractor's purposes, including but not limited to any aspects of the means, methods, techniques, sequences and procedures of construction to be employed by Contractor, and safety precautions and programs incident thereto;

2. other data, interpretations, opinions, and information contained in such reports or shown or indicated in such drawings; or

3. any Contractor interpretation of or conclusion drawn from any Technical Data or any such other data, interpretations, opinions or information.

C. Contractor shall not be responsible for removing or remediating any Hazardous Environmental Condition encountered, uncovered, or revealed at the Site unless such removal or remediation is expressly identified in the Contract Documents to be within the scope of the Work.

D. Contractor shall be responsible for controlling, containing, and duly removing all Constituents of Concern brought to the Site by any of the Contractor Parties, and for any associated costs;

Copyright© 2018 National Society of Professional Engineers, American Council of Engineering Companies, and American Society of Civil Engineers. All rights reserved.

and for the costs of removing and remediating any Hazardous Environmental Condition created by the presence of any such Constituents of Concern.

E. If Contractor encounters, uncovers, or reveals a Hazardous Environmental Condition whose removal or remediation is not expressly identified in the Contract Documents as being within the scope of the Work, or if any of the Contractor Parties creates a Hazardous Environmental Condition, then Contractor shall immediately: (1) secure or otherwise isolate such condition; (2) stop all Work in connection with such condition and in any area that could reasonably be affected thereby (except in an emergency as required by Paragraph 7.15); and (3) notify Owner (and promptly thereafter confirm such notice in writing). Owner shall consider the necessity to retain a qualified expert to evaluate such condition or take corrective action, if any. Owner shall take such actions as are necessary to permit Owner to timely obtain required permits and provide Contractor the written notice required by Paragraph 5.06.F. If any of the Contractor Parties created the Hazardous Environmental Condition in question, then Owner may remove and remediate the Hazardous Environmental Condition and impose a set-off against payments to account for the associated costs.

F. Contractor shall not resume Work in connection with such Hazardous Environmental Condition or in any affected area until after Owner has obtained all required permits related thereto, and delivered written notice to Contractor either (1) specifying that such condition and any affected area is or has been rendered safe for the resumption of Work, or (2) specifying any special conditions under which such Work may be resumed safely.

G. If Owner and Contractor cannot agree as to entitlement to, or on the amount or extent of, any adjustment in Contract Price or Contract Times as a result of such Work stoppage, such special conditions under which Work is agreed to be resumed by Contractor, or any costs or expenses incurred in response to the Hazardous Environmental Condition, then within 14 days after Owner's written notice regarding the resumption of Work, Contractor may submit a Change Proposal and Owner, without waiting 14 days, may impose a set-off. Entitlement to any such adjustment is subject to the provisions of Paragraphs 4.05.D, 4.05.E, 11.07, and 11.08. In any event, Contractor shall not be entitled to increased overhead or profit in connection with any adjustment of the Contract Price under this Paragraph 5.06.

H. If, after receipt of such written notice, Contractor does not agree to resume such Work based on a reasonable belief it is unsafe, or does not agree to resume such Work under such special conditions, then Owner may order the portion of the Work that is in the area affected by such condition to be deleted from the Work, following the contractual change procedures in Article 11. Owner may have such deleted portion of the Work performed by Owner's own forces or others in accordance with Article 8.

I. To the full extent permitted by Laws and Regulations, Contractor shall defend (at Owner's option in its sole discretion), indemnify and hold harmless the Owner Parties and Engineer, and consultants and subcontractors of each and any of them, from and against all claims, costs, losses, and damages (including but not limited to all fees and charges of engineers, architects, attorneys, and other professionals and all court or arbitration or other dispute resolution costs) arising out of or relating to the failure to control, contain, or remove any Constituents of Concern brought to the Site by any of the Contractor Parties, to a Hazardous Environmental Condition created by any of the Contractor Parties, or failure by any of the Contractor Parties to fulfill a specific responsibility under the Contract with respect to a Hazardous Environmental Condition or any other environmental matters. Nothing in this

Copyright© 2018 National Society of Professional Engineers, American Council of Engineering Companies, and American Society of Civil Engineers. All rights reserved.

Paragraph 5.06.I obligates Contractor to defend or indemnify any individual or entity from and against the consequences of that individual's or entity's own negligence.

ARTICLE 6—BONDS AND INSURANCE

6.01 *Performance, Payment, and Other Bonds*

A. Contractor shall furnish a performance bond and a payment bond, each in an amount at least equal to the Contract Price, as security for the faithful performance and payment of Contractor's obligations under the Contract. These bonds shall remain in effect until at least one year after Final Completion or until completion of the correction period specified in Paragraph 15.08, whichever is later, except as provided otherwise by Laws or Regulations, the terms of a prescribed bond form, or other provisions of the Contract.

B. Contractor shall also furnish such other bonds (if any) as are required by other provisions of the Contract.

C. All bonds shall be in the form included in the Bidding Documents or otherwise specified by Owner prior to signing the Contract, except as provided otherwise by Laws or Regulations, and shall be issued and signed by a surety named in "Companies Holding Certificates of Authority as Acceptable Sureties on Federal Bonds and as Acceptable Reinsuring Companies" as published in Department Circular 570 (as amended and supplemented) by the Bureau of the Fiscal Service, U.S. Department of the Treasury. A bond signed by an agent or attorney-in-fact shall be accompanied by a certified copy of that individual's authority to bind the surety. The evidence of authority shall show that it is effective on the date the agent or attorney-in-fact signed the accompanying bond.

D. Contractor shall obtain the required bonds from surety companies that are duly licensed or authorized, in the state or jurisdiction in which the Project is located, to issue bonds in the required amounts.

E. If the surety on a bond furnished by Contractor is declared bankrupt or becomes insolvent, or the surety ceases to meet the requirements of this Paragraph 6.01, then Contractor shall promptly notify Owner in writing and shall, within 20 days after the event giving rise to such notification, provide another bond and surety, both of which shall comply with the bond and surety requirements in this Paragraph 6.01.

F. If Contractor has failed to obtain a required bond, Owner may exclude the Contractor from the Site and exercise Owner's termination rights under Article 16.

G. Upon request to Owner from any Subcontractor, Supplier, or other person or entity claiming to have performed or furnished labor, services, materials, or equipment used in the performance of the Work, Owner may provide a copy of the payment bond to such person or entity.

H. Upon request to Contractor from any Subcontractor, Supplier, or other person or entity claiming to have performed or furnished labor, services, materials, or equipment used in the performance of the Work, Contractor shall provide a copy of the payment bond to such person or entity.

Copyright© 2018 National Society of Professional Engineers, American Council of Engineering Companies, and American Society of Civil Engineers. All rights reserved.

6.02 *Insurance—General Provisions*

A. Owner and Contractor shall obtain and maintain insurance required of each of them, respectively, in this article and elsewhere in the Contract.

B. All insurance required by the Contract to be purchased and maintained by Owner or Contractor shall be obtained from and maintained with insurance companies that are duly licensed or authorized in the state or jurisdiction in which the Project is located to issue insurance policies for the required limits and coverages. All companies that provide insurance policies required under this Contract shall have an A.M. Best rating of A-VII or better.

C. Alternative forms of insurance coverage, including but not limited to self-insurance and "Occupational Accident and Excess Employer's Indemnity Policies," are not sufficient to meet the insurance requirements of this Contract.

D. Contractor shall deliver to Owner, with copies to each additional insured identified in the Contract, certificates of insurance and endorsements establishing that Contractor has obtained and is maintaining the policies and coverages required by the Contract. Upon request by Owner or any other insured, Contractor shall also furnish other evidence of such required insurance, including but not limited to copies of policies, documentation of applicable self-insured retentions (if allowed) and deductibles, full disclosure of all relevant exclusions, and evidence of insurance required to be purchased and maintained by Subcontractors or Suppliers. In any documentation furnished under this provision, Contractor, Subcontractors, and Suppliers may block out (redact) (1) any confidential premium or pricing information and (2) any wording specific to a project or jurisdiction other than that applicable to this Contract.

E. Owner shall deliver to Contractor, with copies to each additional insured identified in the Contract, certificates of insurance and endorsements establishing that Owner has obtained and is maintaining the policies and coverages required of Owner by the Contract (if any). Upon request by Contractor or any other insured, Owner shall also provide other evidence of such required insurance (if any), including but not limited to copies of policies, documentation of applicable self-insured retentions (if allowed) and deductibles, and full disclosure of all relevant exclusions. In any documentation furnished under this provision, Owner may block out (redact) (1) any confidential premium or pricing information and (2) any wording specific to a project or jurisdiction other than that relevant to this Contract.

F. Failure of Owner or Contractor to demand such certificates or other evidence of the other party's full compliance with these insurance requirements, or failure of Owner or Contractor to identify a deficiency in compliance from the evidence provided, shall not be construed as a waiver of the other party's obligation to obtain and maintain such insurance.

G. In addition to the liability insurance required to be provided by Contractor, the Owner, at Owner's option, may purchase and maintain Owner's own liability insurance. Owner's liability policies, if any, operate separately and independently from policies required to be provided by Contractor, and Contractor cannot rely upon Owner's liability policies for any of Contractor's obligations to the Owner, Engineer, or third parties.

H. Contractor shall require:

1. Subcontractors to purchase and maintain worker's compensation, commercial general liability, and other insurance that is appropriate for their participation in the Project, and

Copyright© 2018 National Society of Professional Engineers, American Council of Engineering Companies, and American Society of Civil Engineers. All rights reserved.

to name as additional insureds the Owner Parties and Engineer (and any other individuals or entities identified in the Contract as additional insureds on Contractor's liability policies) on each Subcontractor's commercial general liability insurance policy; and

2. Suppliers to purchase and maintain insurance that is appropriate for their participation in the Project.

I. If either party does not purchase or maintain the insurance required of such party by the Contract, such party shall notify the other party in writing of such failure to purchase prior to the start of the Work, or of such failure to maintain prior to any change or lapse in the required coverage.

J. If Contractor has failed to obtain and maintain required insurance, Contractor's entitlement to enter or remain at the Site shall end immediately, and Owner may impose a set-off against payment for any associated costs (including but not limited to the cost of purchasing necessary insurance coverage), and exercise Owner's termination rights under Article 16.

K. Without prejudice to any other right or remedy, if a party has failed to obtain required insurance, the other party may elect (but is in no way obligated) to obtain equivalent insurance to protect such other party's interests at the expense of the party who was required to provide such coverage, and the Contract Price shall be adjusted accordingly.

L. Owner does not represent that insurance coverage and limits established in this Contract necessarily will be adequate to protect Contractor or Contractor's interests. Contractor is responsible for determining whether such coverage and limits are adequate to protect its interests, and for obtaining and maintaining any additional insurance that Contractor deems necessary.

M. The insurance and insurance limits required under this Contract shall not be deemed as a limitation on Contractor's liability, or that of its Subcontractors or Suppliers, under the indemnities granted to Owner and other individuals and entities in the Contract, or otherwise.

N. All the policies of insurance required to be purchased and maintained under this Contract shall contain a provision or endorsement that the coverage afforded shall not be canceled, or renewal refused, until at least 10 days prior written notice has been given to the purchasing policyholder. Within three days after receipt of any such written notice, the purchasing policyholder shall provide a copy of the notice to each other insured, additional insured, and the other party to the Contract.

6.03 *Contractor's Insurance*

A. *Required Insurance*: Contractor shall purchase and maintain commercial general liability, automobile liability, worker's compensation and employer's liability, umbrella or excess liability, and other insurance pursuant to the specific requirements of the Contract.

B. *General Provisions*: The policies of insurance required under this Contract shall:

1. include at least the specific coverages required;

2. be written for not less than the limits set forth in the Agreement, or those required by Laws or Regulations, whichever is greater;

3. remain in effect at least until Final Completion, and longer if expressly required elsewhere in this Contract, and at all times thereafter when Contractor is correcting, removing, or

Copyright© 2018 National Society of Professional Engineers, American Council of Engineering Companies, and American Society of Civil Engineers. All rights reserved.

replacing defective Work as a warranty or correction obligation, or otherwise, or returning to the Site to conduct other tasks arising from the Contract;

4. apply with respect to the performance of the Work by any of the Contractor Parties; and
5. include all necessary endorsements to support the stated requirements.

C. *Additional Insureds*: The Contractor's commercial general liability, automobile liability, employer's liability, umbrella or excess, pollution liability, and unmanned aerial vehicle liability policies, if required by this Contract, shall:

1. include and list as additional insureds the Owner Parties and Engineer, and any individuals or entities identified as additional insureds in the Contract;
2. include coverage for the respective officers, directors, members, partners, employees, and consultants of all such additional insureds;
3. afford primary coverage to these additional insureds for all claims covered thereby (including, as applicable, those arising from both ongoing and completed operations);
4. not seek contribution from insurance maintained by the additional insured; and
5. as to commercial general liability insurance, apply to additional insureds with respect to liability caused in whole or in part by Contractor's acts or omissions, or the acts and omissions of those working on Contractor's behalf, in the performance of Contractor's operations.

D. *Commercial General Liability—Claims Covered:* Contractor shall purchase and maintain commercial general liability insurance, covering all operations by or on behalf of Contractor, on an occurrence basis, against claims for:

1. damages because of bodily injury, sickness or disease, or death of any person other than Contractor's employees,
2. damages insured by reasonably available personal injury liability coverage, and
3. damages because of injury to or destruction of tangible property wherever located, including but not limited to loss of use resulting therefrom.

E. *Commercial General Liability—Form and Content:* Contractor's commercial liability policy shall be written on a 1996 (or later) Insurance Services Organization, Inc. (ISO) commercial general liability form (occurrence form) and include at least the following coverages and endorsements:

1. Products and completed operations coverage.
   a. Such insurance shall be maintained for at least five years after Final Completion.
   b. Contractor shall furnish Owner and each other additional insured (as identified in the Contract) evidence of continuation of such insurance at Final Completion and every required year thereafter.
2. Blanket contractual liability coverage, including but not limited to coverage of Contractor's contractual indemnity obligations in Paragraph 7.18.
3. Severability of interests and no insured-versus-insured or cross-liability exclusions.

Copyright© 2018 National Society of Professional Engineers, American Council of Engineering Companies, and American Society of Civil Engineers. All rights reserved.

4. Underground, explosion, and collapse coverage.
5. Personal injury coverage.
6. Additional insured endorsements that include both ongoing operations and products and completed operations coverage through ISO Endorsements CG 20 10 10 01 and CG 20 37 10 01 (together). If Contractor demonstrates to Owner that the specified ISO endorsements are not commercially available, then Contractor may satisfy this requirement by providing equivalent endorsements.

F. *Commercial General Liability—Excluded Content:* The commercial general liability insurance policy, including its coverages, endorsements, and incorporated provisions, shall not include any of the following:

1. Any modification of the standard definition of "insured contract" (except to delete the railroad protective liability exclusion if Contractor is required to indemnify a railroad or others with respect to Work within 50 feet of railroad property).
2. Any exclusion for water intrusion or water damage.
3. Any provisions resulting in the erosion of insurance limits by defense costs other than those already incorporated in ISO form CG 00 01.
4. Any exclusion of coverage relating to earth subsidence or movement.
5. Any exclusion for the insured's vicarious liability, strict liability, or statutory liability (other than worker's compensation).
6. Any limitation or exclusion based on the nature of Contractor's work.
7. Any professional liability exclusion broader in effect than the most recent edition of ISO form CG 22 79.

G. *Commercial General Liability—Minimum Policy Limits:* Contractor's commercial general liability policy shall be written for not less than the limits set forth in the Agreement.

H. *Automobile Liability:* Contractor shall purchase and maintain automobile liability insurance for damages because of bodily injury or death of any person or property damage arising out of the ownership, maintenance, or use of any motor vehicle. The automobile liability policy shall be written on an occurrence basis, and shall be written for not less than the limits set forth in the Agreement.

I. *Umbrella or Excess Liability:* Contractor shall purchase and maintain umbrella or excess liability insurance written over the underlying employer's liability, commercial general liability, and automobile liability insurance described in this Paragraph 6.03. The coverage afforded shall be at least as broad as that of each and every one of the underlying policies, and shall be written for not less than the limits set forth in the Agreement.

J. *Waiver of Subrogation:* Contractor shall obtain a waiver of subrogation endorsement to each insurance policy required by this Paragraph 6.03 that waives the insurer's right to subrogate a claim against any of the Owner Parties. Contractor also shall require each of its Subcontractors with such insurance policies applicable to the Project to obtain similar endorsements to those policies in favor of the Owner Parties.

Copyright© 2018 National Society of Professional Engineers, American Council of Engineering Companies, and American Society of Civil Engineers. All rights reserved.

K. *Professional Liability Coverage (if applicable):* If any provision of the Contract requires any of the Contractor Parties to provide professional services, including but not limited to any architectural, engineering, design, construction management, surveying or other professional service, Contractor shall obtain and require such Contractor Party to obtain Professional Liability (errors and omissions) coverage applicable to that party's portion of the Work, with limits reasonably acceptable to Owner.

6.04 *Builder's Risk and Other Property Insurance*

A. *Builder's Risk*: Unless otherwise provided in the Contract, Contractor shall purchase and maintain builder's risk insurance upon the Work on a completed value basis, in the amount of the Work's full insurable replacement cost (subject to such deductible amounts as provided in the Contract or required by Laws and Regulations, whichever is less).

B. *Property Insurance for Facilities of Owner Where Work Will Occur*: Owner is responsible for obtaining and maintaining property insurance covering each existing structure, building, or facility in which any part of the Work will occur, or to which any part of the Work will attach or be adjoined. Such property insurance shall be written on a special perils (all-risk) form, on a replacement cost basis, providing coverage consistent with that required for the builder's risk insurance, and shall be maintained until the Work is complete, as set forth in Paragraph 15.06.

C. *Property Insurance for Substantially Complete Facilities*: Promptly after Substantial Completion, and before actual occupancy or use of the substantially completed Work, Owner shall obtain property insurance for such substantially completed Work, and maintain such property insurance at least until the Work is complete, as set forth in Paragraph 15.06. Such property insurance shall be written on a special perils (all-risk) form, on a replacement cost basis, and provide coverage consistent with that required for the builder's risk insurance. The builder's risk insurance may terminate upon written confirmation of Owner's procurement of such property insurance.

D. *Partial Occupancy or Use by Owner*: If Owner will occupy or use a portion or portions of the Work prior to Substantial Completion of all the Work, as provided in Paragraph 15.04, then Owner (directly, if it is the purchaser of the builder's risk policy, or through Contractor) shall provide advance notice of such occupancy or use to the builder's risk insurer, and obtain an endorsement consenting to the continuation of coverage prior to commencing such partial occupancy or use.

E. *Insurance of Other Property; Additional Insurance*: If the express insurance provisions of the Contract do not require or address the insurance of a property item or interest, then the entity or individual owning such property item shall be responsible for insuring it. If Contractor elects to obtain other special insurance to be included in or supplement the builder's risk or property insurance policies provided under this Paragraph 6.04, it may do so at Contractor's expense.

6.05 *Property Losses; Subrogation*

A. The builder's risk insurance policy purchased and maintained in accordance with Paragraph 6.04 (or an installation floater policy if authorized by the Contract), shall contain provisions to the effect that in the event of payment of any loss or damage the insurer shall have no rights of recovery against any insureds thereunder, or against Engineer or its

Copyright© 2018 National Society of Professional Engineers, American Council of Engineering Companies, and American Society of Civil Engineers. All rights reserved.

consultants, or their officers, directors, members, partners, employees, agents, consultants, or subcontractors.

1. Owner and Contractor waive all rights against each other and the respective officers, directors, members, partners, employees, agents, consultants, and subcontractors of each and any of them, for all losses and damages caused by, arising out of, or resulting from any of the perils, risks, or causes of loss covered by such policies and any other property insurance applicable to the Work, but only to the extent of insurance proceeds received for such losses and damages; and, in addition, waive all such rights against Engineer, its consultants, all individuals or entities identified in the Contract as builder's risk or installation floater insureds, and the officers, directors, members, partners, employees, agents, consultants, and subcontractors of each and any of them, under such policies for losses and damages so caused, but only to the extent of insurance proceeds received for such losses and damages.
2. None of the waivers in this Paragraph 6.05 extends to the rights that any party making such waiver has to the proceeds of insurance held by Owner or Contractor as trustee or fiduciary, or otherwise payable under any policy so issued.

B. Any property insurance policy maintained by Owner covering any loss, damage, or consequential loss to Owner's existing structures, buildings, or facilities in which any part of the Work will occur, or to which any part of the Work will attach or adjoin; to adjacent structures, buildings, or facilities of Owner; or to part or all of the completed or substantially completed Work, during partial occupancy or use pursuant to Paragraph 15.04, after Substantial Completion, or after Final Completion, shall contain provisions to the effect that in the event of payment of any loss or damage the insurer shall have no rights of recovery against any insureds thereunder, or against Contractor, Subcontractors, or Engineer, or the officers, directors, members, partners, employees, agents, consultants, or subcontractors of each and any of them, and that the insured is allowed to waive the insurer's rights of subrogation in a written contract signed prior to the loss, damage, or consequential loss.

1. Owner waives all rights against Contractor, Subcontractors, and Engineer, and the officers, directors, members, partners, employees, agents, consultants and subcontractors of each and any of them, for all losses and damages caused by, arising out of, or resulting from fire or any of the perils, risks, or causes of loss covered by such policies, but only to the extent of insurance proceeds received for such losses and damages.

C. The waivers in this Paragraph 6.05 include the waiver of rights due to business interruption, loss of use, or other consequential loss extending beyond direct physical loss or damage to Owner's property or the Work caused by, arising out of, or resulting from fire or other insured peril, risk, or cause of loss.

D. Contractor shall be responsible for assuring that each Subcontract contains provisions whereby the Subcontractor waives all rights against Owner, Contractor, all individuals or entities identified in the Contract as insureds, the Engineer and its consultants, and the officers, directors, members, partners, employees, agents, consultants, and subcontractors of each and any of them, for all losses and damages caused by, arising out of, relating to, or resulting from fire or other peril, risk, or cause of loss covered by builder's risk insurance, installation floater, and any other property insurance applicable to the Work.

Copyright© 2018 National Society of Professional Engineers, American Council of Engineering Companies, and American Society of Civil Engineers. All rights reserved.

6.06 *Receipt and Application of Property Insurance Proceeds*

A. Any insured loss under the builder's risk and other policies of property insurance required by Paragraph 6.04 shall be adjusted and settled with the named insured that purchased the policy. Such named insured shall act as fiduciary for the other insureds, and give notice to such other insureds that adjustment and settlement of a claim is in progress. Any other insured shall state its position regarding a claim for insured loss in writing within 14 days after notice of such claim.

B. Proceeds for such insured losses may be made payable by the insurer either jointly to multiple insureds, or to the named insured that purchased the policy in its own right and as fiduciary for other insureds, subject to the requirements of any applicable mortgage clause. A named insured receiving insurance proceeds under the builder's risk and other policies of insurance required by Paragraph 6.04 shall maintain such proceeds in a segregated account, and distribute such proceeds in accordance with such agreement as the parties in interest may reach, or as otherwise required under the dispute resolution provisions of this Contract or applicable Laws and Regulations.

C. If no other special agreement is reached, Contractor shall repair or replace the damaged Work, using allocated insurance proceeds.

ARTICLE 7—CONTRACTOR'S RESPONSIBILITIES

7.01 *Contractor's Means and Methods of Construction*

A. Contractor shall be solely responsible for the means, methods, techniques, sequences, and procedures of construction.

B. If the Contract Documents note, or Contractor determines, that professional engineering or other design services are needed to carry out Contractor's responsibilities for construction means, methods, techniques, sequences, and procedures, or for Site safety, then Contractor shall cause such services to be provided by a properly licensed design professional, at Contractor's expense. Such services are not Owner-delegated professional design services under this Contract, and neither Owner nor Engineer has any responsibility with respect to (1) Contractor's determination of the need for such services, (2) the qualifications or licensing of the design professionals retained or employed by Contractor, (3) the performance of such services, or (4) any errors, omissions, or defects in such services.

7.02 *Supervision and Superintendence*

A. Contractor shall supervise, inspect, and direct the Work competently and efficiently, devoting such attention thereto and applying such skills and expertise as necessary to perform the Work in accordance with the Contract Documents.

B. At all times during the progress of the Work, Contractor shall assign a competent resident superintendent who shall not be replaced without written approval of Owner, except under extraordinary circumstances.

7.03 *Labor; Working Hours*

A. Contractor shall provide competent, suitably qualified personnel to survey and lay out the Work and perform construction as required by the Contract Documents. Contractor shall maintain good discipline and order at the Site.

Copyright© 2018 National Society of Professional Engineers, American Council of Engineering Companies, and American Society of Civil Engineers. All rights reserved.

B. Contractor shall be fully responsible to Owner for all acts and omissions of the Contractor Parties, just as Contractor is responsible for Contractor's own acts and omissions.

C. Except as otherwise required for the safety or protection of persons or the Work or property at the Site or adjacent thereto, and except as otherwise stated in the Contract Documents, all Work at the Site shall be performed during regular working hours, Monday through Friday. Contractor shall not perform Work on a Saturday, Sunday, or any legal holiday. Contractor may perform Work outside regular working hours or on Saturdays, Sundays, or legal holidays only with Owner's written consent, which shall not be unreasonably withheld.

1. As used in the Contract, "regular working hours" shall mean 7:00 AM to 6:00 PM.

2. As used in Contract, "legal holiday" shall mean each of the following:

Holiday	**Date**
New Year's Day	January 1
Martin Luther King's Birthday	3rd Monday in January
Good Friday	Friday before Easter
Memorial Day	Last Monday in May
Independence Day	July 4
Labor Day	1st Monday in September
Thanksgiving Day	4th Thursday in November
Friday after Thanksgiving	4th Friday in November
Christmas Day	December 25
Bonus Christmas Day	The first week day after Christmas Day, unless otherwise determined by Owner

7.04 *Services, Materials, and Equipment*

A. Unless otherwise specified in the Contract Documents, Contractor shall provide and assume full responsibility for all services, materials, equipment, labor, transportation, construction equipment and machinery, tools, appliances, fuel, power, light, heat, telephone, water, sanitary facilities, temporary facilities, and all other facilities and incidentals necessary for the performance, testing, start up, and completion of the Work, whether or not such items are specifically called for in the Contract Documents.

B. All materials and equipment incorporated into the Work shall be new and of good quality, except as otherwise provided in the Contract Documents. All warranties and guarantees in or required by the Contract Documents shall expressly run to the benefit of Owner. If required

Copyright© 2018 National Society of Professional Engineers, American Council of Engineering Companies, and American Society of Civil Engineers. All rights reserved.

by Owner, Contractor shall furnish satisfactory evidence (including but not limited to reports of required tests) as to the source, kind, and quality of materials and equipment.

C. All materials and equipment shall be stored, applied, installed, connected, erected, protected, used, cleaned, and conditioned in accordance with instructions of the applicable Supplier, except as otherwise provided in the Contract Documents.

7.05 *"Or Equals"*

A. *Contractor's Request; Governing Criteria*: Whenever an item of equipment or material is specified or described in the Contract Documents by using the names of one or more proprietary items or specific Suppliers, the Contract Price has been based upon Contractor furnishing such item as specified. The specification or description of such an item is intended to establish the type, function, appearance, and quality required. Unless the specification or description contains or is followed by words reading that no like, equivalent, or "or equal" item is permitted, Contractor may request that Owner authorize the use of other items of equipment or material, or items from other proposed Suppliers, under the following circumstances:

1. If Owner in its sole discretion determines that an item of equipment or material proposed by Contractor is functionally equal to that named and sufficiently similar so that no change in related Work will be required, Owner may deem it an "or equal" item. For the purposes of this paragraph, a proposed item of equipment or material shall be considered functionally equal to an item so named if:

   a. in the exercise of reasonable judgment Owner determines that the proposed item:

      1) is at least equal in materials of construction, quality, durability, appearance, strength, and design characteristics;

      2) will reliably perform at least equally well the function and achieve the results imposed by the design concept of the completed Project as a functioning whole;

      3) has a proven record of performance and availability of responsive service; and

      4) is not objectionable to Owner.

   b. Contractor certifies that, if the proposed item is approved and incorporated into the Work:

      1) there will be no increase in cost to the Owner or increase in Contract Times; and

      2) the item will conform substantially to the detailed requirements of the item named in the Contract Documents.

B. *Contractor's Expense*: Contractor shall provide all data in support of any proposed "or equal" item at Contractor's expense.

C. *Owner's Evaluation and Determination*: Owner shall be allowed a reasonable time to evaluate each "or-equal" request. Owner may require Contractor to furnish additional data about the proposed "or-equal" item. Owner shall be the sole judge of acceptability. No "or-equal" item shall be ordered, furnished, installed, or utilized until Owner's review is complete and Owner determines that the proposed item is an "or-equal," which shall be evidenced by an approved Shop Drawing or other written communication. Owner shall advise Contractor in writing of any negative determination.

Copyright© 2018 National Society of Professional Engineers, American Council of Engineering Companies, and American Society of Civil Engineers. All rights reserved.

D. *Effect of Owner's Determination*: Neither approval nor denial of an "or-equal" request shall result in any change in Contract Price. The Owner's denial of an "or-equal" request shall be final and binding, and may not be reversed through an appeal under any provision of the Contract.

E. *Treatment as a Substitution Request*: If Owner determines that an item of equipment or material proposed by Contractor does not qualify as an "or-equal" item, Contractor may request that Owner consider the item a proposed substitute pursuant to Paragraph 7.06.

7.06 *Substitutes*

A. *Contractor's Request; Governing Criteria*: Unless the specification or description of an item of equipment or material required to be furnished under the Contract Documents contains or is followed by words reading that no substitution is permitted, Contractor may request that Owner authorize the use of other items of equipment or material under the following circumstances (to the extent possible such requests shall be made before commencement of related construction at the Site):

1. Contractor shall submit sufficient information as provided in this Paragraph 7.06.A to allow Owner to determine if the item of material or equipment proposed is functionally equivalent to that named and an acceptable substitute therefor. Owner shall not accept requests for review of proposed substitute items of equipment or material from anyone other than Contractor.

2. The requirements for review by Owner shall be as set forth in Paragraph 7.06.B, as supplemented by the Specifications, and as Owner decides is appropriate under the circumstances.

3. Contractor shall make written application to Owner for review of a proposed substitute item of equipment or material that Contractor seeks to furnish or use. The application:

a. shall certify that the proposed substitute item will:

1) perform adequately the functions and achieve the results called for by the general design;

2) be similar in substance to the item specified; and

3) be suited for the same use as the item specified.

b. shall state:

1) the extent, if any, to which the use of the proposed substitute item will necessitate a change in Contract Times;

2) whether use of the proposed substitute item in the Work will require a change in any of the Contract Documents (or in the provisions of any other direct contract with Owner for other work on the Project) to adapt the design to the proposed substitute item; and

3) whether incorporation or use of the proposed substitute item in connection with the Work is subject to payment of any license fee or royalty.

c. shall identify:

1) all variations of the proposed substitute item from the item specified; and

Copyright© 2018 National Society of Professional Engineers, American Council of Engineering Companies, and American Society of Civil Engineers. All rights reserved.

2) available engineering, sales, maintenance, repair, and replacement services.

d. shall contain an itemized estimate of all costs or credits that will result directly or indirectly from use of such substitute item, including but not limited to changes in Contract Price, shared savings, costs of redesign, and claims of other contractors affected by any resulting change.

B. *Owner's Evaluation and Determination*: Owner shall be allowed a reasonable time to evaluate each substitute request. Owner may require Contractor to furnish additional data about the proposed substitute item. Owner shall be the sole judge of acceptability. No substitute shall be ordered, furnished, installed, or utilized until Owner's review is complete and Owner determines that the proposed item is an acceptable substitute. Owner's determination shall be evidenced by a Field Order or a proposed Change Order accounting for the substitution itself and all related impacts, including changes in Contract Price or Contract Times. Owner shall advise Contractor in writing of any negative determination.

C. *Special Guarantee*: Owner may require Contractor to furnish at Contractor's expense a special performance guarantee or other surety with respect to any substitute.

D. *Reimbursement of Owner Cost*: Contractor shall bear Owner's costs in evaluating a substitute proposed or submitted by Contractor. Whether or not Owner approves a substitute so proposed or submitted by Contractor, Contractor shall reimburse Owner for the reasonable charges of an engineer or other consultant for assistance in evaluating each such proposed substitute. Contractor shall also reimburse Owner for the reasonable charges of an engineer or other consultant for making changes in the Contract Documents (or in the provisions of any other direct contract with Owner) resulting from the acceptance of each proposed substitute.

E. *Contractor's Expense*: Contractor shall provide all data in support of any proposed substitute at Contractor's expense.

F. *Effect of Owner Determination*: If Owner approves the substitution request, Contractor shall sign the proposed Change Order and proceed with the substitution. Owner's denial of a substitution request shall be final and binding, and may not be reversed through an appeal under any provision of the Contract. Contractor may challenge the scope of reimbursement costs imposed under Paragraph 7.06.D, by timely submittal of a Change Proposal.

7.07 *Concerning Subcontractors and Suppliers*

A. Contractor may retain Subcontractors and Suppliers for the performance of parts of the Work, subject to acceptance by Owner of such Subcontractors and Suppliers. The Contractor's retention of a Subcontractor or Supplier for the performance of parts of the Work shall not relieve Contractor's obligation to Owner to perform and complete the Work in accordance with the Contract Documents.

B. Contractor shall retain specific Subcontractors and Suppliers for the performance of designated parts of the Work if required by the Contract to do so.

C. Subsequent to the submittal of Contractor's Bid, Owner may not require Contractor to retain any Subcontractor or Supplier to furnish or perform any of the Work against which Contractor has reasonable objection.

Copyright© 2018 National Society of Professional Engineers, American Council of Engineering Companies, and American Society of Civil Engineers. All rights reserved.

D. Prior to entry into any binding subcontract or purchase order, Contractor shall submit to Owner in writing the identity of the proposed Subcontractor or Supplier (unless Owner has already deemed such proposed Subcontractor or Supplier acceptable during the bidding process or otherwise). Such proposed Subcontractor or Supplier shall be deemed acceptable to Owner unless Owner raises a substantive, reasonable objection within 14 days after receipt of Contractor's written submission.

E. Owner may require the replacement of any Subcontractor or Supplier. Owner also may require Contractor to retain specific replacements; provided, however, that Owner may not require a replacement to which Contractor has a reasonable objection. If Contractor has submitted the identity of certain Subcontractors or Suppliers for acceptance by Owner, and Owner has accepted it (either in writing or by failing to make written objection thereto), then Owner may subsequently revoke the acceptance of any such Subcontractor or Supplier so identified solely on the basis of substantive, reasonable objection after due investigation. Contractor shall submit an acceptable replacement for the rejected Subcontractor or Supplier.

F. If Owner requires the replacement of any Subcontractor or Supplier retained by Contractor to perform any part of the Work, then Contractor shall be entitled to an adjustment in Contract Price or Contract Times with respect to the replacement; and Contractor shall initiate a Change Proposal for such adjustment within 30 days after Owner's requirement of replacement.

G. No acceptance by Owner of any such Subcontractor or Supplier, whether initially or as a replacement, shall constitute a waiver of the right of Owner to the completion of the Work in accordance with the Contract Documents.

H. On a monthly basis, Contractor shall submit to Owner a complete list of all Subcontractors and Suppliers having a direct contract with Contractor, and of all other Subcontractors and Suppliers known to Contractor at the time of submittal.

I. Contractor shall be solely responsible for scheduling and coordinating the work of Subcontractors and Suppliers.

J. The divisions and sections of the Specifications and the identifications of any Drawings do not control Contractor in dividing the Work among Subcontractors or Suppliers, or in delineating the Work to be performed by any specific trade.

K. All Work performed for Contractor by a Subcontractor or Supplier shall be pursuant to an appropriate written contractual agreement that specifically binds the Subcontractor or Supplier to the applicable provisions of the Contract for the benefit of Owner. Contractor shall furnish to Owner copies of all agreements with Subcontractors as requested by Owner.

L. Owner may furnish to any Subcontractor or Supplier, to the extent practicable, information about amounts paid to Contractor for Work performed for Contractor by the Subcontractor or Supplier.

M. Contractor shall restrict all Subcontractors and Suppliers from communicating with Engineer and Owner, except through Contractor or in case of an emergency, or as otherwise expressly allowed in this Contract.

Copyright© 2018 National Society of Professional Engineers, American Council of Engineering Companies, and American Society of Civil Engineers. All rights reserved.

7.08 *Patent Fees and Royalties*

A. Contractor shall pay all license fees and royalties and assume all costs incident to the use in the performance of the Work or the incorporation in the Work of any invention, design, process, product, or device that is the subject of patent rights or copyrights held by others. If an invention, design, process, product, or device is specified in the Contract Documents for use in the performance of the Work and if, to the actual knowledge of Owner or Engineer, its use is subject to patent rights or copyrights calling for the payment of any license fee or royalty to others, the existence of such rights shall be disclosed in the Contract Documents.

B. To the full extent permitted by Laws and Regulations, Owner shall indemnify and hold harmless Contractor, and its officers, directors, members, partners, employees, agents, consultants, and subcontractors, from and against all claims, costs, losses, and damages (including but not limited to all fees and charges of engineers, architects, attorneys, and other professionals, and all court or arbitration or other dispute resolution costs) arising out of or relating to any infringement of patent rights or copyrights incident to the proper use in the performance of the Work or resulting from the incorporation in the Work of any invention, design, process, product, or device specified in the Contract Documents, but not identified as being subject to payment of any license fee or royalty to others required by patent rights or copyrights.

C. To the full extent permitted by Laws and Regulations, Contractor shall defend (at Owner's option in its sole discretion), indemnify and hold harmless the Owner Parties and Engineer, and consultants and subcontractors of each and any of them, from and against all claims, costs, losses, and damages (including but not limited to all fees and charges of engineers, architects, attorneys, and other professionals and all court or arbitration or other dispute resolution costs) arising out of or relating to any infringement of patent rights or copyrights incident to the use in the performance of the Work or resulting from the incorporation in the Work of any invention, design, process, product, or device not specified in the Contract Documents.

7.09 *Permits*

A. Unless otherwise provided in the Contract Documents, Contractor shall obtain and pay for all construction permits, licenses, and certificates of occupancy. Owner shall assist Contractor, when necessary, in obtaining such permits and licenses. Contractor shall pay all governmental charges and inspection fees necessary for the prosecution of the Work that are applicable at the time of the submission of Contractor's Bid. Owner shall pay all charges of utility owners for connections for providing permanent service to the Work.

B. If Owner acquires any permits from CSX, U.S. Army Corps of Engineers, Tennessee Department Environment and Conservation, Tennessee Department of Transportation, Williamson County, City of Franklin, or other utilities or agencies, the terms of the restrictions and conditions applicable to such permits shall be disclosed to Contractor, and Contractor shall perform the Work in accordance with all such restrictions and conditions.

7.10 *Taxes*

A. Contractor shall pay all sales, consumer, use, and other similar taxes required to be paid by Contractor in accordance with Laws and Regulations.

Copyright© 2018 National Society of Professional Engineers, American Council of Engineering Companies, and American Society of Civil Engineers. All rights reserved.

7.11 *Laws and Regulations*

A. Contractor shall give all notices required by and shall comply with all Laws and Regulations. Neither Owner nor Engineer shall be responsible for monitoring Contractor's compliance with any Laws or Regulations.

B. If any of the Contractor Parties performs any Work or takes any other action knowing or having reason to know that it is contrary to Laws or Regulations, Contractor shall bear all resulting costs and losses, and shall, to the full extent permitted by Laws and Regulations, defend (at Owner's option in its sole discretion), indemnify and hold harmless the Owner Parties and Engineer, and consultants, and subcontractors of each and any of them, from and against all claims, costs, losses, and damages (including but not limited to all fees and charges of engineers, architects, attorneys, and other professionals and all court or arbitration or other dispute resolution costs) arising out of or relating to such Work or other action. It is not Contractor's responsibility to make certain that the Work described in the Contract Documents is in accordance with Laws and Regulations, but this does not relieve Contractor of its obligations under Paragraph 3.03.

C. Owner or Contractor may give written notice to the other party of any changes after the submission of Contractor's Bid in Laws or Regulations having an effect on the cost or time of performance of the Work, including but not limited to changes in Laws or Regulations having an effect on procuring permits and on sales, use, value-added, consumption, and other similar taxes. If Owner and Contractor are unable to agree on entitlement to or on the amount or extent, if any, of any adjustment in Contract Price or Contract Times resulting from such changes, then within 14 days after such written notice Contractor may submit a Change Proposal, or Owner may initiate a Claim at any time.

7.12 *Record Documents*

A. Contractor shall maintain in a safe place at the Site one printed record copy of all Drawings, Specifications, Addenda, Change Orders, Work Change Directives, Field Orders, written interpretations and clarifications, and approved Shop Drawings. Contractor shall keep such record documents in good order and annotate them to show changes made during construction. These record documents, together with all approved Samples, shall be available to Owner for reference. Upon Final Completion of the Work, Contractor shall deliver these record documents to Owner.

7.13 *Safety and Protection*

A. Contractor shall be solely responsible for initiating, maintaining, and supervising all safety precautions and programs in connection with the Work. Such responsibility does not relieve Subcontractors or Suppliers of their responsibility for the safety of persons or property in the performance of their Work, nor for compliance with applicable safety Laws and Regulations.

B. Contractor shall designate a qualified and experienced safety representative whose duties and responsibilities are the prevention of Work-related accidents and the maintenance and supervision of safety precautions and programs.

C. Contractor shall take all necessary precautions for the safety of and shall provide the necessary protection to prevent damage, injury, or loss to:

1. all persons on the Site or who might be affected by the Work;

Copyright© 2018 National Society of Professional Engineers, American Council of Engineering Companies, and American Society of Civil Engineers. All rights reserved.

2. all the Work, materials, and equipment to be incorporated therein, whether in storage on or off the Site; and

3. other property at the Site or adjacent thereto, including but not limited to trees, shrubs, lawns, walks, pavements, roadways, structures, other work in progress, utilities, and Underground Facilities not designated for removal, relocation, or replacement in the course of construction.

D. All damage, injury, or loss to any property referred to in Paragraph 7.13.C.2 or 7.13.C.3 caused, directly or indirectly, in whole or in part, by any of the Contractor Parties shall be remedied by Contractor at its expense (except damage or loss attributable to the fault of Drawings or Specifications or to the acts or omissions of Owner or Engineer or anyone employed by any of them, or anyone for whose acts any of them is liable, and not attributable, directly or indirectly, in whole or in part, to the fault or negligence of any of the Contractor Parties).

E. Contractor shall comply with all applicable Laws and Regulations relating to the safety of persons or property, or to the protection of persons or property from damage, injury, or loss; and shall erect and maintain all necessary safeguards for such safety and protection. Contractor shall promptly notify Owner of any damage, injury, or loss to the persons or property of the type referred to in Paragraph 7.13.C.

F. Contractor shall notify Owner; the owners of adjacent property; the owners of Underground Facilities and other utilities (if the identity of such owners is known to Contractor); and other contractors and utility owners performing work at or adjacent to the Site, in writing, when Contractor knows the Work might affect them, and shall cooperate with them in the protection, removal, relocation, and replacement of their property or work in progress.

G. Contractor shall comply with the applicable requirements of Owner's safety programs, if any, but such responsibility shall not affect Contractor's other obligations under this Paragraph 7.13. Any of Owner's safety programs that are applicable to the Work are identified or included in the Contract Documents. Contractor shall immediately notify Owner if Contractor thinks any of Owner's safety programs might not be safe or might conflict with Contractor's other obligations.

H. Contractor shall inform Owner and Engineer of the specific requirements of Contractor's safety program with which Owner's and Engineer's employees and representatives shall comply while at the Site.

I. Contractor's duties and responsibilities for safety and protection shall continue until all the Work is completed and Contractor has left the Site (except as otherwise expressly provided in the Contract Documents in connection with Substantial Completion).

J. Contractor's duties and responsibilities for safety and protection shall resume whenever Contractor or any Subcontractor or Supplier returns to the Site to fulfill warranty or correction obligations, or to conduct other tasks arising from the Contract Documents.

7.14 *Hazard Communication Programs*

A. Contractor shall be responsible for coordinating any exchange of safety data sheets (formerly known as material safety data sheets) or other hazard communication information required

Copyright© 2018 National Society of Professional Engineers, American Council of Engineering Companies, and American Society of Civil Engineers. All rights reserved.

to be made available to or exchanged between or among employers at the Site in accordance with Laws or Regulations.

7.15 *Emergencies*

A. In emergencies affecting the safety or protection of persons or the Work or property at the Site or adjacent thereto, Contractor is obligated to act to prevent damage, injury, or loss. Contractor shall give Owner prompt written notice if Contractor believes that any significant changes in the Work or variations or deviations from the Contract Documents have been caused by an emergency, or are required as a result of Contractor's response to an emergency. If Owner determines that a change in the Contract Documents is required because of an emergency or Contractor's response, a Work Change Directive or Change Order shall be issued.

7.16 *Submittals*

A. *Shop Drawing and Sample Requirements*

1. Before submitting a Shop Drawing or Sample, Contractor shall:

a. review and coordinate the Shop Drawing or Sample with other Shop Drawings and Samples and with the requirements of the Work and the Contract Documents;

b. determine and verify:

1) all field measurements, quantities, dimensions, specified performance and design criteria, installation requirements, materials, catalog numbers, and similar information with respect to the Submittal;

2) the suitability of all materials and equipment offered with respect to the indicated application, fabrication, shipping, handling, storage, assembly, and installation pertaining to the performance of the Work; and

3) all information relative to Contractor's responsibilities for means, methods, techniques, sequences, and procedures of construction, and safety precautions and programs incident thereto; and

c. confirm that the Submittal is complete with respect to all related data included in the Submittal.

2. Each Shop Drawing or Sample shall bear a stamp or specific written certification that Contractor has satisfied Contractor's obligations under the Contract Documents with respect to Contractor's review of that Submittal, and that Contractor approves the Submittal.

3. With each Shop Drawing or Sample, Contractor shall give Owner specific written notice of any variations that the Submittal has from the requirements of the Contract Documents. This notice shall be set forth in a written communication separate from the Submittal; and, in addition, in the case of a Shop Drawing by a specific notation made on the Shop Drawing itself.

B. *Submittal Procedures for Shop Drawings and Samples*: Contractor shall label and submit Shop Drawings and Samples to Owner for review and approval in accordance with the accepted Schedule of Submittals.

Copyright© 2018 National Society of Professional Engineers, American Council of Engineering Companies, and American Society of Civil Engineers. All rights reserved.

1. *Shop Drawings*

   a. Contractor shall submit the number of copies required in the Specifications.

   b. Data shown on the Shop Drawings shall be complete with respect to quantities, dimensions, specified performance and design criteria, materials, and similar data to show Owner the services, materials, and equipment Contractor proposes to provide, and to enable Owner to review the information for the limited purposes required by Paragraph 7.16.C.

2. *Samples*

   a. Contractor shall submit the number of Samples required in the Specifications.

   b. Contractor shall clearly identify each Sample as to material, Supplier, pertinent data such as catalog numbers, the use for which intended and other data as Owner requires to enable Owner to review the Submittal for the limited purposes required by Paragraph 7.16.C.

3. Where a Shop Drawing or Sample is required by the Contract Documents or the Schedule of Submittals, any related Work performed prior to Owner's review and approval of the pertinent submittal shall be at the sole expense and responsibility of Contractor.

C. *Owner's Review of Shop Drawings and Samples*

1. Owner shall provide timely review of Shop Drawings and Samples in accordance with the accepted Schedule of Submittals. Owner's review and approval shall be only to determine if the items covered by the Submittals will, after installation or incorporation in the Work, comply with the requirements of the Contract Documents, and be compatible with the design concept of the completed Project as a functioning whole as indicated by the Contract Documents.

2. Owner's review and approval shall not extend to means, methods, techniques, sequences, or procedures of construction, or to safety precautions or programs incident thereto.

3. Owner's review and approval of a separate item as such shall not indicate approval of the assembly in which the item functions.

4. Owner's review and approval of a Shop Drawing or Sample shall not relieve Contractor from responsibility for any variation from the requirements of the Contract Documents unless Contractor has complied with the requirements of Paragraph 7.16.A.3 and Owner has given written approval of each such variation by specific written notation thereof incorporated in or accompanying the Shop Drawing or Sample. Owner shall document any such approved variation from the requirements of the Contract Documents in a Field Order or other appropriate Contract modification.

5. Owner's review and approval of a Shop Drawing or Sample shall not relieve Contractor from responsibility for complying with the requirements of Paragraphs 7.16.A and B.

6. Owner's review and approval of a Shop Drawing or Sample, or of a variation from the requirements of the Contract Documents, shall not, under any circumstances, change the Contract Times or Contract Price, unless such changes are included in a Change Order.

Copyright© 2018 National Society of Professional Engineers, American Council of Engineering Companies, and American Society of Civil Engineers. All rights reserved.

7. Neither Owner's receipt, review, acceptance, or approval of a Shop Drawing or Sample shall result in such item becoming a Contract Document.

8. Contractor shall perform the Work in compliance with the requirements and commitments set forth in approved Shop Drawings and Samples, subject to the provisions of Paragraph 7.16.C.4.

D. *Resubmittal Procedures for Shop Drawings and Samples*

1. Contractor shall make corrections required by Owner and shall return the required number of corrected copies of Shop Drawings and submit, as required, new Samples for review and approval. Contractor shall direct specific attention in writing to revisions other than the corrections called for by Owner on previous Submittals.

2. Contractor shall furnish required Shop Drawing and Sample submittals with sufficient information and accuracy to obtain required approval of an item with no more than two resubmittals. Contractor shall bear Owner' costs for reviewing a third or subsequent resubmittal of a Shop Drawing or Sample, and Contractor shall be responsible for an engineer's or other consultant's charges to Owner for assistance with such review. Owner may impose a set-off against payments due Contractor to secure reimbursement for such charges.

3. If Contractor requests a change of a previously approved Shop Drawing or Sample, Contractor shall be responsible for an engineer's or other consultant's charges to Owner for its review time, and Owner may impose a set-off against payments due Contractor to secure reimbursement for such charges, unless the need for such change is beyond the control of Contractor.

E. *Submittals Other than Shop Drawings, Samples, and Owner-Delegated Designs*

1. The following provisions apply to all Submittals other than Shop Drawings, Samples, and Owner-delegated designs:

   a. Contractor shall submit all such Submittals to Owner in accordance with the Schedule of Submittals and pursuant to the applicable provisions of the Contract Documents.

   b. Owner shall provide timely review of all such Submittals in accordance with the Schedule of Submittals and return such Submittals with a notation of either Accepted or Not Accepted. Any such Submittal that is not returned within the time established in the Schedule of Submittals shall be deemed accepted.

   c. Owner's review shall be only to determine if the Submittal is acceptable under the requirements of the Contract Documents as to general form and content of the Submittal.

   d. If any such Submittal is not accepted, Contractor shall confer with Owner regarding the reason for the non-acceptance, and resubmit an acceptable document.

2. Procedures for the submittal and acceptance of the Progress Schedule, the Schedule of Submittals, and the Schedule of Values are set forth in Paragraphs 2.03. 2.04, and 2.05.

F. Owner-delegated Designs: Submittals pursuant to Owner-delegated designs are governed by the provisions of Paragraph 7.19.

Copyright© 2018 National Society of Professional Engineers, American Council of Engineering Companies, and American Society of Civil Engineers. All rights reserved.

7.17 *Contractor's General Warranty and Guarantee*

A. Contractor warrants and guarantees to Owner that all Work will be of good quality, new (unless the Contract Documents permit otherwise) and in accordance with the Contract Documents, and will not be defective. Owner is entitled to rely on Contractor's warranty and guarantee.

B. Owner's rights under this warranty and guarantee are in addition to, and are not limited by, Owner's rights under the correction period provisions of Paragraph 15.08. The time in which Owner may enforce its warranty and guarantee rights under this Paragraph 7.17 is limited only by applicable Laws and Regulations restricting actions to enforce such rights; provided, however, that after the end of the correction period under Paragraph 15.08:

1. Owner shall give Contractor written notice of any defective Work within 60 days after Owner's discovery that such Work is defective; and

2. Such notice shall be deemed the start of an event giving rise to a Claim under Paragraph 12.01.B, such that any related Claim shall be brought within 30 days after the notice.

C. Contractor's warranty and guarantee hereunder excludes defects or damage caused by:

1. abuse, or improper modification, maintenance, or operation, by persons other than any of the Contractor Parties; or

2. normal wear and tear under normal usage.

D. Contractor's obligations to perform and complete the Work and other obligations in accordance with the Contract Documents is absolute. No approval, consent, acceptance, or other action or exercise of rights by Owner, including but not limited to those set forth below in this Paragraph 7.17.D, shall constitute an acceptance of Work or performance by Contractor that is not in accordance with the Contract Documents, a release of Contractor's obligation to perform the Work in accordance with the Contract Documents, or a release of Owner's warranty and guarantee rights under the Contract Documents:

1. Any of Owner's or Engineer's rights or obligations under Article 10, including but not limited to site visits or observations by Owner or Engineer;

2. Payment by Owner of any progress or final payment;

3. Use or occupancy of the Work or any part thereof by Owner;

4. Any review and approval of a Submittal, Shop Drawing, Sample submittal or schedule;

5. The issuance of a notice of acceptability;

6. The end of the correction period established in Paragraph 15.08;

7. Any inspection, test, or approval by others; or

8. Any correction of defective Work by Owner.

E. If the Contract requires the Contractor to accept the assignment of a contract entered into by Owner, then the specific warranties, guarantees, and correction obligations contained in the assigned contract shall govern with respect to Contractor's performance obligations to Owner for the Work described in the assigned contract.

Copyright© 2018 National Society of Professional Engineers, American Council of Engineering Companies, and American Society of Civil Engineers. All rights reserved.

7.18 *Indemnification*

A. To the full extent permitted by Laws and Regulations, and in addition to any other obligations of Contractor under the Contract or otherwise, Contractor shall defend (at Owner's option in its sole discretion), indemnify and hold harmless the Owner Parties and Engineer, and consultants and subcontractors of each and any of them, from and against all claims, actions, liabilities, losses, damages, costs, expenses and judgments (including but not limited to all fees and charges of engineers, architects, attorneys, and other professionals, and all court or arbitration or other dispute resolution costs) arising out of, relating to or resulting from the performance, or failure in performance, of the Work, provided that such claim, action, liability, loss, cost, expense, judgment or damage is attributable, in whole or in part to any act or omission of any of the Contractor Parties.

B. In any and all claims against any of the Owner Parties or Engineer, or any of their consultants or subcontractors, by any employee (or the survivor or personal representative of such employee) of any of the Contractor Parties, the defense and indemnification obligations under Paragraph 7.18.A shall not be limited in any way by any limitation on the amount or type of damages, compensation, or benefits payable by or for any of the Contractor Parties under workers' compensation acts, disability benefit acts, or other employee benefit acts.

7.19 *Delegation of Professional Design Services*

A. Owner may require Contractor to provide professional design services for a portion of the Work by express delegation in the Contract Documents. Such delegation shall specify the performance and design criteria that such services shall satisfy, and the Submittals that Contractor shall furnish to Owner with respect to the Owner-delegated design.

B. Contractor shall cause such Owner-delegated professional design services to be provided pursuant to the professional standard of care by a properly licensed design professional, whose signature and seal shall appear on all drawings, calculations, specifications, certifications, and Submittals prepared by such design professional. Such design professional shall issue all certifications of design required by Laws and Regulations.

C. If a Shop Drawing or other Submittal related to the Owner-delegated design is prepared by Contractor, a Subcontractor, then such Shop Drawing or other Submittal shall bear the written approval of Contractor's design professional when submitted by Contractor.

D. Owner and Engineer shall be entitled to rely upon the adequacy, accuracy, and completeness of the services, certifications, and approvals performed or provided by the design professionals retained or employed by Contractor under an Owner-delegated design, subject to the professional standard of care and the performance and design criteria stated in the Contract Documents.

E. Pursuant to this Paragraph 7.19, Owner's review, approval, and other determinations regarding design drawings, calculations, specifications, certifications, and other Submittals furnished by Contractor pursuant to an Owner-delegated design shall be only for the following limited purposes:

1. Checking for conformance with the requirements of this Paragraph 7.19;

2. Confirming that Contractor (through its design professionals) has used the performance and design criteria specified in the Contract Documents; and

Copyright© 2018 National Society of Professional Engineers, American Council of Engineering Companies, and American Society of Civil Engineers. All rights reserved.

3. Establishing that the design furnished by Contractor is consistent with the design concept expressed in the Contract Documents.

F. Contractor shall not be responsible for the adequacy of performance or design criteria specified by Owner or Engineer.

G. Contractor is not required to provide professional services in violation of applicable Laws and Regulations, and Contractor shall promptly notify Owner if Contractor relies on or invokes this provision.

ARTICLE 8—OTHER WORK AT THE SITE

8.01 *Other Work*

A. In addition to and apart from the Work under the Contract Documents, the Owner may perform other work at or adjacent to the Site. Such other work may be performed by Owner's employees, or through contracts between the Owner and third parties. Owner may also arrange to have third-party utility owners perform work on their utilities and facilities at or adjacent to the Site.

B. If Owner performs other work at or adjacent to the Site with Owner's employees, or through contracts for such other work, then Owner shall give Contractor written notice thereof prior to starting any such other work. If Owner has advance information regarding the start of any third-party utility work that Owner has arranged to take place at or adjacent to the Site, Owner shall provide such information to Contractor.

C. Contractor shall afford proper and safe access to the Site to each contractor that performs such other work, each utility owner performing other work, and Owner, if Owner is performing other work with Owner's employees, and provide a reasonable opportunity for the introduction and storage of materials and equipment and the performance of such other work.

D. Contractor shall do all cutting, fitting, and patching of the Work that is required to properly connect or otherwise make its several parts come together and properly integrate with such other work. Contractor shall not endanger any work of others by cutting, excavating, or otherwise altering such work; provided, however, that Contractor may cut or alter others' work with the written consent of Owner and the others whose work will be affected.

E. If the proper performance or results of any part of Contractor's Work depends upon work performed by others, Contractor shall inspect such other work and promptly report to Owner in writing any delays, defects, or deficiencies in such other work that render it unavailable or unsuitable for the proper performance and results of Contractor's Work. Contractor's failure to so report shall constitute an acceptance of such other work as fit and proper for integration with Contractor's Work except for latent defects and latent deficiencies in such other work.

F. The provisions of this article are not applicable to work that is performed by third-party utilities or other third-party entities without a contract with Owner, or that is performed without having been arranged by Owner. If such work occurs, then any related delay, disruption, or interference incurred by Contractor is governed by the provisions of Paragraph 4.05.C.3.

Copyright© 2018 National Society of Professional Engineers, American Council of Engineering Companies, and American Society of Civil Engineers. All rights reserved.

8.02 *Coordination*

A. If Owner intends to contract with others for the performance of other work at or adjacent to the Site, to perform other work at or adjacent to the Site with Owner's employees, or to arrange to have utility owners perform work at or adjacent to the Site, the following shall be provided to Contractor prior to the start of any such other work:

1. The identity of the individual or entity that will have authority and responsibility for coordination of the activities among the various contractors;

2. An itemization of the specific matters to be covered by such authority and responsibility; and

3. The extent of such authority and responsibilities.

B. Unless otherwise provided in the Contract Documents, Owner shall have sole authority and responsibility for such coordination.

8.03 *Legal Relationships*

A. If, in the course of performing other work for Owner at or adjacent to the Site, the Owner's employees, any other contractor working for Owner, or any utility owner that Owner has arranged to perform work, causes damage to the Work or to the property of Contractor or its Subcontractors, or delays, disrupts, interferes with, or increases the scope or cost of the performance of the Work, through actions or inaction, then Contractor shall be entitled to an adjustment in the Contract Price or the Contract Times, each as reasonably determined by Owner. Contractor shall submit any Change Proposal seeking an adjustment in the Contract Price or the Contract Times under this paragraph within 14 days after the damaging, delaying, disrupting, or interfering event. The entitlement to, and extent of, any such adjustment shall take into account information (if any) regarding such other work that was provided to Contractor in the Contract Documents prior to the submittal of the Bid, and any remedies available to Contractor under Laws or Regulations concerning utility action or inaction. When applicable, any such adjustment in Contract Price shall be conditioned on Contractor assigning to Owner all Contractor's rights against such other contractor or utility owner with respect to the damage, delay, disruption, or interference that is the subject of the adjustment. Contractor's entitlement to an adjustment of the Contract Times or Contract Price is subject to the provisions of Paragraphs 4.05.D and 4.05.E.

B. Contractor shall take reasonable and customary measures to avoid damaging, delaying, disrupting, or interfering with the work of Owner, any other contractor, or any utility owner performing other work at or adjacent to the Site.

1. If Contractor fails to take such measures and as a result damages, delays, disrupts, or interferes with the work of any such other contractor or utility owner, then Owner may impose a set-off against payments due Contractor, and assign to such other contractor or utility owner the Owner's contractual rights against Contractor with respect to the breach of the obligations set forth in this Paragraph 8.03.B.

2. When Owner is performing other work at or adjacent to the Site with Owner's employees, Contractor shall be liable to Owner for damage to such other work, and for the reasonable direct delay, disruption, and interference costs incurred by Owner as a result of Contractor's failure to take reasonable and customary measures with respect to Owner's

Copyright© 2018 National Society of Professional Engineers, American Council of Engineering Companies, and American Society of Civil Engineers. All rights reserved.

other work. In response to such damage, delay, disruption, or interference, Owner may impose a set-off against payments due Contractor.

C. If Contractor damages, delays, disrupts, or interferes with the work of any other contractor, or any utility owner performing other work at or adjacent to the Site, through Contractor's failure to take reasonable and customary measures to avoid such impacts, or if any claim arising out of Contractor's actions, inactions, or negligence in performance of the Work at or adjacent to the Site is made by any such other contractor or utility owner against Contractor, any of the Owner Parties, or Engineer, then Contractor shall (1) promptly attempt to settle the claim as to all parties through negotiations with such other contractor or utility owner, or otherwise resolve the claim by arbitration or other dispute resolution proceeding or at law, and (2) to the full extent permitted by Laws and Regulations, defend (at Owner's option in its sole discretion), indemnify and hold harmless the Owner Parties and Engineer, and consultants and subcontractors of each and any of them from and against all such claims, and against all costs, losses, and damages (including but not limited to all fees and charges of engineers, architects, attorneys, and other professionals and all court or arbitration or other dispute resolution costs) arising out of or relating to such damage, delay, disruption, or interference.

ARTICLE 9—OWNER'S RESPONSIBILITIES

9.01 *Communications to Contractor*

A. Except as otherwise provided in these General Conditions, Owner shall issue all communications directly to Contractor.

B. Owner's Designated Representative identified in the Agreement, and Owner's City Administrator, Assistant City Administrator, City Engineer, and Department Directors, are the only individuals authorized to give approvals, consents, and otherwise act on Owner's behalf under the Contract Documents, including with respect to, but not limited to, Change Orders, Work Change Directives, Change Proposals, Field Orders, amendments, and other modifications to the Contract. From time to time, Owner may also designate in writing other representatives who are authorized to act on Owner's behalf.

C. In any event, any modification to the Contract in the amount of $25,000 or greater shall be effective only if signed by Owner's City Administrator, and all modifications to the Contract are subject to final written approval by the City of Franklin Board of Mayor and Aldermen.

9.02 *Replacement and Role of Engineer*

A. Owner may at its discretion appoint an engineer to replace Engineer, provided Contractor makes no reasonable objection to the replacement engineer. The replacement engineer's status under the Contract Documents shall be that of the former Engineer.

B. At Owner's sole discretion, Owner may utilize Engineer to assist with any of Owner's rights, duties, responsibilities, and obligations under the Contract during construction of the Work, and, with prior written notice to Contractor, may engage Engineer to carry out and administer such rights, duties and obligations on Owner's behalf.

9.03 *Furnish Data*

A. Owner shall promptly furnish the data required of Owner under the Contract Documents.

Copyright© 2018 National Society of Professional Engineers, American Council of Engineering Companies, and American Society of Civil Engineers. All rights reserved.

9.04 *Pay When Due*

A. Owner shall make payments to Contractor when they are due as provided in the Agreement.

9.05 *Lands and Easements; Reports, Tests, and Drawings*

A. Owner's duties with respect to providing lands and easements are set forth in Paragraph 5.01.

B. Owner's duties with respect to providing engineering surveys to establish reference points are set forth in Paragraph 4.03.

C. Article 5 refers to Owner's identifying and making available to Contractor copies of reports of explorations and tests of conditions at the Site, and drawings of physical conditions relating to existing surface or subsurface structures at the Site.

9.06 *Insurance*

A. Owner's responsibilities, if any, with respect to purchasing and maintaining liability and property insurance are set forth in Article 6.

9.07 *Change Orders*

A. Owner's responsibilities with respect to Change Orders are set forth in Article 11.

9.08 *Inspections, Tests, and Approvals*

A. Owner's responsibility with respect to certain inspections, tests, and approvals is set forth in Paragraph 14.02.B.

9.09 *Limitations on Owner's Responsibilities*

A. The Owner shall not supervise, direct, or have control or authority over, nor be responsible for, Contractor's means, methods, techniques, sequences, or procedures of construction, or the safety precautions and programs incident thereto, or for any failure of Contractor to comply with Laws and Regulations applicable to the performance of the Work. Owner shall not be responsible for Contractor's failure to perform the Work in accordance with the Contract Documents.

9.10 *Undisclosed Hazardous Environmental Condition*

A. Owner's responsibility in respect to an undisclosed Hazardous Environmental Condition is set forth in Paragraph 5.06.

9.11 *Evidence of Financial Arrangements*

A. Upon the reasonable request of Contractor, Owner shall furnish Contractor reasonable evidence that financial arrangements have been made to satisfy Owner's obligations under the Contract (including obligations under proposed changes in the Work).

9.12 *Safety Programs*

A. While at the Site, Owner's employees and representatives shall comply with the specific applicable requirements of Contractor's safety programs of which Owner has been informed.

B. Owner shall furnish copies of any applicable Owner safety programs to Contractor.

Copyright© 2018 National Society of Professional Engineers, American Council of Engineering Companies, and American Society of Civil Engineers. All rights reserved.

ARTICLE 10—ENGINEER'S AND OWNER'S STATUS DURING CONSTRUCTION

10.01 *Authority of Engineer*

A. The duties and responsibilities and the limitations of authority of Engineer during construction, if any, are set forth in the Contract.

10.02 *Visits to Site*

A. Owner and Engineer may make visits to the Site at intervals appropriate to the various stages of construction as Owner deems necessary in order to observe the progress that has been made and the quality of the various aspects of Contractor's Work. Based on information obtained during such visits and observations, Owner may determine, in general, if the Work is proceeding in accordance with the Contract Documents. Owner shall not be required to make exhaustive or continuous inspections on the Site to check the quality or quantity of the Work. Owner's efforts shall be directed toward providing for Owner a degree of confidence that the completed Work will conform generally to the Contract Documents.

10.03 *Determinations for Unit Price Work*

A. Owner shall determine the actual quantities and classifications of Unit Price Work performed by Contractor as set forth in Paragraph 13.03.

10.04 *Decisions on Requirements of Contract Documents and Acceptability of Work*

A. Owner shall render decisions regarding the requirements of the Contract Documents, and judge the acceptability of the Work, pursuant to the specific procedures set forth herein for initial interpretations, Change Proposals, and acceptance of the Work.

10.05 *Limitations on Owner's Authority and Responsibilities*

A. Neither Owner's authority or responsibility under this Article 10, nor any decision made by Owner in good faith either to exercise or not exercise such authority or responsibility, shall create, impose, or give rise to any duty in contract, tort, or otherwise owed by Owner to any of the Contractor Parties.

B. Owner shall not supervise, direct, control, or have authority over or be responsible for Contractor's means, methods, techniques, sequences, or procedures of construction, or the safety precautions and programs incident thereto, or for any failure of Contractor to comply with Laws and Regulations applicable to the performance of the Work. Owner shall not be responsible for Contractor's failure to perform the Work in accordance with the Contract Documents.

C. Owner shall not be responsible for the acts or omissions of Contractor or of any Subcontractor, any Supplier, or of any other individual or entity performing any of the Work.

D. Owner's review of the final Application for Payment and accompanying documentation, and all maintenance and operating instructions, schedules, guarantees, bonds, certificates of inspection, tests and approvals, and other documentation required to be delivered by Contractor under Paragraph 15.06.A, shall only be to determine generally that their content complies with the requirements of, and in the case of certificates of inspections, tests, and approvals, that the results certified indicate compliance with, the Contract Documents.

Copyright© 2018 National Society of Professional Engineers, American Council of Engineering Companies, and American Society of Civil Engineers. All rights reserved.

10.06 *Compliance with Safety Program*

A. While at the Site, Owner's employees and representatives shall comply with the specific applicable requirements of Contractor's safety programs.

ARTICLE 11—CHANGES TO THE CONTRACT

11.01 *Amending and Supplementing the Contract*

A. The Contract may be amended or supplemented by a Change Order, a Work Change Directive, or a Field Order.

B. If an amendment or supplement to the Contract includes a change in the Contract Price or the Contract Times, such amendment or supplement shall be set forth in a Change Order.

11.02 *Change Orders*

A. Owner and Contractor shall sign appropriate Change Orders covering:

1. Changes in Contract Price or Contract Times agreed to by the parties, including any undisputed sum or amount of time for Work actually performed in accordance with a Work Change Directive;

2. Changes in Contract Price resulting from an Owner set-off, unless Contractor has duly contested such set-off by submitting a Claim;

3. Changes in the Work: (a) ordered by Owner pursuant to Paragraph 11.05, (b) required because of Owner's acceptance of defective Work under Paragraph 14.04 or Owner's correction of defective Work under Paragraph 14.07, or (c) agreed to by the parties; and

4. Changes that embody the substance of any final and binding results under: Paragraph 11.03.B, resolving the impact of a Work Change Directive; Paragraph 11.09, concerning Change Proposals; Article 12, Claims; Paragraph 13.02.D, final adjustments resulting from allowances; Paragraph 13.03.D, final adjustments relating to determination of quantities for Unit Price Work; and similar provisions.

B. If Contractor refuses to sign a Change Order that is required to be signed under Paragraph 11.02.A, it shall be deemed to be of full force and effect, as if fully signed.

11.03 *Work Change Directives*

A. A Work Change Directive shall not change the Contract Price or the Contract Times but is evidence that the parties expect that the modification ordered or documented by a Work Change Directive will be incorporated in a subsequently issued Change Order, following negotiations by the parties as to the Work Change Directive's effect, if any, on the Contract Price and Contract Times; or, if negotiations are unsuccessful, by a determination under the Contract Documents governing adjustments, expressly including Paragraph 11.07 regarding change of Contract Price.

B. If Owner has issued a Work Change Directive and:

1. Contractor believes that an adjustment in Contract Times or Contract Price is necessary, then Contractor shall submit any Change Proposal seeking such an adjustment no later than 14 days after the completion of the Work set out in the Work Change Directive.

Copyright© 2018 National Society of Professional Engineers, American Council of Engineering Companies, and American Society of Civil Engineers. All rights reserved.

2. Owner believes that an adjustment in Contract Times or Contract Price is necessary, then Owner shall submit any Claim seeking such an adjustment no later than 60 days after issuance of the Work Change Directive.

11.04 *Field Orders*

A. Owner may authorize changes in the Work if the changes do not involve an adjustment in the Contract Price or the Contract Times and are compatible with the design concept of the completed Project as a functioning whole as indicated by the Contract Documents. Such changes shall be accomplished by a Field Order and shall be binding on Contractor, which shall perform the Work involved promptly.

B. If Contractor believes that a Field Order justifies an adjustment in the Contract Price or Contract Times, then, before proceeding with the Work at issue, Contractor shall submit a Change Proposal as provided herein.

11.05 *Owner-Authorized Changes in the Work*

A. Without invalidating the Contract and without notice to any surety, Owner may, at any time or from time to time, order additions, deletions, or revisions in the Work.

B. Such changes in the Work may be accomplished by a Change Order, if Owner and Contractor have agreed as to the effect, if any, of the changes on Contract Times or Contract Price; or by a Work Change Directive. Upon receipt of any such document, Contractor shall promptly proceed with the Work involved; or, in the case of a deletion in the Work, promptly cease construction activities with respect to such deleted Work. Added or revised Work shall be performed under the applicable conditions of the Contract Documents.

C. Nothing in this Paragraph 11.05 obligates Contractor to undertake work that Contractor reasonably concludes cannot be performed in a manner consistent with Contractor's safety obligations under the Contract Documents or Laws and Regulations.

11.06 *Unauthorized Changes in the Work*

A. Contractor shall not be entitled to an increase in the Contract Price or an extension of the Contract Times with respect to any work performed that is not required by the Contract Documents, as amended, modified, or supplemented, except in the case of an emergency as provided in Paragraph 7.15 or in the case of uncovering Work as provided in Paragraph 14.05.C.2.

11.07 *Change of Contract Price*

A. The Contract Price may only be changed by a Change Order. Any Change Proposal for an adjustment in the Contract Price shall comply with the provisions of Paragraph 11.09. Any Claim for an adjustment of Contract Price shall comply with the provisions of Article 12.

B. An adjustment in the Contract Price shall be determined as follows:

1. Where the Work involved is covered by unit prices contained in the Contract Documents, then by application of such unit prices to the quantities of the items involved (subject to the provisions of Paragraph 13.03);

2. Where the Work involved is not covered by unit prices contained in the Contract Documents, then by a mutually agreed lump sum (which might include an allowance for overhead and profit not necessarily in accordance with Paragraph 11.07.C.2); or

Copyright© 2018 National Society of Professional Engineers, American Council of Engineering Companies, and American Society of Civil Engineers. All rights reserved.

3. Where the Work involved is not covered by unit prices contained in the Contract Documents and the parties do not reach mutual agreement to a lump sum, then on the basis of the Cost of the Work (determined as provided in Paragraph 13.01) plus a Contractor's fee for overhead and profit (determined as provided in Paragraph 11.07.C).

C. *Contractor's Fee*: When applicable, the Contractor's fee for overhead and profit shall be determined as follows:

1. A mutually acceptable fixed fee; or

2. If a fixed fee is not agreed upon, then a fee based on the following percentages of the various portions of the Cost of the Work:

a. For costs incurred under Paragraphs 13.01.B.1 and 13.01.B.2, the Contractor's fee shall be 15 percent of the costs;

b. For costs incurred under Paragraph 13.01.B.3, the Contractor's fee shall be 5 percent of the costs;

c. Where one or more tiers of subcontracts are on the basis of Cost of the Work plus a fee and no fixed fee is agreed upon, the intent of Paragraphs 11.07.C.2.a and 11.07.C.2.b is that the Contractor's fee shall be based on: (1) a fee of 15 percent of the costs incurred under Paragraphs 13.01.B.1 and 13.01.B.2 by the Subcontractor that actually performs the Work, at whatever tier, and (2) with respect to Contractor itself and to any Subcontractors of a tier higher than that of the Subcontractor that actually performs the Work, a fee of 5 percent of the amount (fee plus underlying costs incurred) attributable to the next lower tier Subcontractor; provided, however, that for any such subcontracted Work the maximum total fee to be paid by Owner shall be no greater than 27 percent of the costs incurred by the Subcontractor that actually performs the Work;

d. No fee shall be payable on the basis of costs itemized under Paragraphs 13.01.B.4, 13.01.B.5, or 13.01.C;

e. The amount of credit to be allowed by Contractor to Owner for any change that results in a net decrease in Cost of the Work shall be the amount of the actual net decrease in Cost of the Work and a deduction of an additional amount equal to 5 percent of such actual net decrease in Cost of the Work; and

f. When both additions and credits are involved in any one change or Change Proposal, the adjustment in Contractor's fee shall be computed by determining the sum of the costs in each of the cost categories in Paragraph 13.01.B (specifically, payroll costs, Paragraph 13.01.B.1; incorporated materials and equipment costs, Paragraph 13.01.B.2; Subcontract costs, Paragraph 13.01.B.3; special consultants costs, Paragraph 13.01.B.4; and other costs, Paragraph 13.01.B.5) and applying to each such cost category sum the appropriate fee from Paragraphs 11.07.C.2.a through 11.07.C.2.e, inclusive.

11.08 *Change of Contract Times*

A. The Contract Times may only be changed by a Change Order. Any Change Proposal for an adjustment in the Contract Times shall comply with the provisions of Paragraph 11.09. Any Claim for an adjustment in the Contract Times shall comply with the provisions of Article 12.

Copyright© 2018 National Society of Professional Engineers, American Council of Engineering Companies, and American Society of Civil Engineers. All rights reserved.

B. Delay, disruption, and interference in the Work, and any related changes in Contract Times, are addressed in and governed by Paragraph 4.05.

11.09 *Change Proposals*

A. *Purpose and Content*: Contractor shall submit a Change Proposal to Owner to request an adjustment in the Contract Times or Contract Price; contest an initial decision by Owner concerning the requirements of the Contract Documents or relating to the acceptability of the Work under the Contract Documents; challenge a set-off against payment due; or seek other relief or changes under the Contract. The Change Proposal shall specify any proposed change in Contract Times or Contract Price, or other proposed relief, and explain the reason for the proposed change, with citations to any governing or applicable provisions of the Contract Documents. Each Change Proposal shall address only one issue, or a set of closely related issues.

B. *Change Proposal Procedures*

1. *Submittal*: Contractor shall submit each Change Proposal to Owner within 14 days after the start of the event giving rise thereto; otherwise any request by Contractor for an adjustment in the Contract Times or Contract Price associated with such Change Proposal shall be deemed waived.

2. *Supporting Data*: The Contractor shall submit supporting data, including but not limited to the proposed change in Contract Price or Contract Time (if any), to Owner within 14 days after the submittal of the Change Proposal.

   a. Change Proposals based on or related to delay, interruption, or interference shall comply with the provisions of Paragraphs 4.05.D and 4.05.E.

   b. Change proposals related to a change of Contract Price shall include full and detailed accounts of materials incorporated into the Work and labor and equipment used for the subject Work.

   The supporting data shall be accompanied by a written statement that the supporting data are accurate and complete, and that any requested time or price adjustment is the entire adjustment to which Contractor believes it is entitled as a result of said event.

3. *Owner's Initial Review*: If in its discretion Owner concludes that additional supporting data is needed before conducting a full review and making a decision regarding the Change Proposal, then Owner may request that Contractor submit such additional supporting data by a date specified by Owner, prior to Owner beginning its full review of the Change Proposal.

4. *Owner's Full Review and Action on the Change Proposal*: Upon receipt of Contractor's supporting data (including any additional data requested by Owner), Owner shall conduct a full review of each Change Proposal and, within 30 days after such receipt of the Contractor's supporting data, either approve the Change Proposal in whole, deny it in whole, or approve it in part and deny it in part. Such actions shall be in writing, with a copy provided to Contractor. If Owner does not take action on the Change Proposal within 30 days, then the Change Proposal is deemed denied, thereby commencing the time for appeal of the denial under Article 12.

Copyright© 2018 National Society of Professional Engineers, American Council of Engineering Companies, and American Society of Civil Engineers. All rights reserved.

5. *Binding Decision*: Owner's decision is final and binding upon Contractor, unless Contractor timely appeals the decision by filing a Claim under Article 12.

C. *Post-Completion*: Contractor shall not submit any Change Proposals after Final Completion.

11.10 *Notification to Surety*

A. If the provisions of any bond require notice to be given to a surety of any change affecting the general scope of the Work or the provisions of the Contract Documents (including but not limited to Contract Price or Contract Times), the giving of any such notice shall be Contractor's responsibility. The amount of each applicable bond shall be adjusted to reflect the effect of any such change.

ARTICLE 12—CLAIMS

12.01 *Claims*

A. *Claims Process*: Claims between Owner and Contractor, including but not limited to the following, are subject to the process set forth in this article:

1. Appeals by Contractor of Owner's decisions regarding Change Proposals;

2. Owner demands for adjustments in the Contract Price or Contract Times, or other relief under the Contract Documents;

3. Subject to the waiver provisions of Paragraph 15.07, any dispute arising after Final Completion.

B. *Submittal of Claim*: The party submitting a Claim shall deliver it directly to the other party to the Contract promptly (but in no event later than 30 days) after the start of the event giving rise thereto; in the case of appeals regarding Change Proposals within 14 days after the decision under appeal. The responsibility to substantiate a Claim rests with the party making the Claim. In the case of a Claim by Contractor seeking an increase in the Contract Times or Contract Price, Contractor's Contractor shall certify that the Claim is made in good faith, that the supporting data are accurate and complete, and that to the best of Contractor's knowledge and belief the amount of time or money requested accurately reflects the full amount to which Contractor is entitled. Claims by Contractor seeking an increase in the Contract Times or Contract Price that are not made within the time limits set forth in this Paragraph 12.01.B shall be deemed waived.

C. *Review and Resolution*: The party receiving a Claim shall review it thoroughly, giving full consideration to its merits. The two parties shall seek to resolve the Claim through the exchange of information and direct negotiations. The parties may extend the time for resolving the Claim by mutual agreement. All actions taken on a Claim shall be stated in writing and submitted to the other party.

D. *Mediation*

1. At any time after initiation of a Claim, Owner and Contractor may mutually agree to mediation of the underlying dispute. The agreement to mediate shall stay the Claim submittal and response process.

2. If Owner and Contractor agree to mediation, then after 60 days from such agreement, either Owner or Contractor may unilaterally terminate the mediation process, and the

Copyright© 2018 National Society of Professional Engineers, American Council of Engineering Companies, and American Society of Civil Engineers. All rights reserved.

Claim submittal and decision process shall resume as of the date of the termination. If the mediation proceeds but is unsuccessful in resolving the dispute, the Claim submittal and decision process shall resume as of the date of the conclusion of the mediation, as determined by the mediator.

3. Owner and Contractor shall each pay one-half of the mediator's fees and costs, unless otherwise agreed.

E. *Partial Approval*: If Owner approves a Claim by Contractor in part and denies it in part, such action shall be final and binding unless within 30 days after such action Contractor invokes the procedure set forth in Article 17 for final resolution of disputes.

F. *Denial of Claim*: If efforts to resolve a Claim are not successful, the party receiving the Claim may deny it by giving written notice of denial to the other party. If the receiving party does not take action on the Claim within 90 days after the written notice of denial, then the Claim is deemed denied. A denial of the Claim shall be final and binding unless within 30 days after the denial the other party invokes the procedure set forth in Article 17 for the final resolution of disputes.

G. *Final and Binding Results*: If the parties reach a mutual agreement regarding a Claim, whether through approval of the Claim, direct negotiations, mediation, or otherwise; or if a Claim is approved in part and denied in part, or denied in full, and such actions become final and binding; then the results of the agreement or action on the Claim shall be incorporated in a Change Order or other written document to the extent they affect the Contract, including the Work, the Contract Times, or the Contract Price.

ARTICLE 13—COST OF THE WORK; ALLOWANCES; UNIT PRICE WORK

13.01 *Cost of the Work*

A. *Purposes for Determination of Cost of the Work*: As used in the Contract Documents, the term Cost of the Work means the sum of all costs necessary for the proper performance of the Work at issue, as further defined in this Paragraph 13.01. The provisions of this Paragraph 13.01 are used for two distinct purposes:

1. To determine Cost of the Work when Cost of the Work is a component of the Contract Price, under cost-plus-fee, time-and-materials, or other cost-based terms; or

2. When needed to determine the value of a Change Order, Change Proposal, Claim, set-off, or other adjustment in Contract Price. When the value of any such adjustment is determined on the basis of Cost of the Work, Contractor is entitled only to those additional or incremental costs required because of the change in the Work or because of the event giving rise to the adjustment.

B. *Costs Included*: Except as otherwise agreed to in writing by Owner, costs included in the Cost of the Work shall be in amounts no higher than those commonly incurred in the locality of the Project, shall not include any of the costs itemized in Paragraph 13.01.C, and shall include only the following items:

1. Payroll costs for employees in the direct employ of Contractor in the performance of the Work under schedules of job classifications agreed upon by Owner and Contractor in advance of the subject Work. Such employees include superintendents, foremen, safety

Copyright© 2018 National Society of Professional Engineers, American Council of Engineering Companies, and American Society of Civil Engineers. All rights reserved.

managers, safety representatives, and other personnel employed full time on the Work. Payroll costs for employees not employed full time on the Work shall be apportioned on the basis of their time spent on the Work. Payroll costs include salaries and wages plus the cost of fringe benefits, which include social security contributions, unemployment, excise, and payroll taxes, workers' compensation, health and retirement benefits, sick leave, and vacation and holiday pay applicable thereto. The expenses of performing Work outside of regular working hours, on Saturday, Sunday, or legal holidays, shall be included in the costs included in this Paragraph 13.01.B.1 to the extent authorized by Owner.

2. Cost of all materials and equipment furnished and incorporated in the Work, including but not limited to costs of transportation and storage thereof, and Suppliers' field services required in connection therewith. All cash discounts accrue to Contractor unless Owner deposits funds with Contractor with which to make payments to which the discounts apply, in which case the cash discounts shall accrue to Owner. Contractor may not keep any cash discounts unless it has provided Owner seven days' prior written notice thereof and the opportunity to deposit funds with Contractor with which to make payments to which the discounts apply. All trade discounts, rebates, and refunds and returns from sale of surplus materials and equipment shall accrue to Owner, and Contractor shall make provisions so that they can be obtained.

3. Payments made by Contractor to Subcontractors for Work performed by Subcontractors. If required by Owner, Contractor shall obtain competitive bids from subcontractors acceptable to Owner and Contractor and shall deliver such bids to Owner, which shall then determine which bids, if any, will be acceptable. If any subcontract provides that the Subcontractor is to be paid on the basis of Cost of the Work plus a fee, the Subcontractor's Cost of the Work and fee shall be determined in the same manner as Contractor's Cost of the Work and fee as provided in this Paragraph 13.01.

4. Costs of special consultants (including but not limited to engineers, architects, testing laboratories, surveyors, attorneys, and accountants) employed or retained for services specifically related to the Work.

5. Other costs consisting of the following:

   a. The proportion of necessary transportation, travel, and subsistence expenses of Contractor's employees incurred in discharge of duties connected with the Work.

   b. Cost, including transportation and maintenance, of all materials, supplies, equipment, machinery, appliances, office, and temporary facilities at the Site, that are consumed in the performance of the Work, and cost, less market value, of such items used but not consumed that remain the property of Contractor.

      1) In establishing included costs for materials such as scaffolding, plating, or sheeting, consideration shall be given to the actual or the estimated life of the material for use on other projects; or rental rates may be established on the basis of purchase or salvage value of such items, whichever is less. Contractor shall not be eligible for compensation for such items in an amount that exceeds the purchase cost of such item.

Copyright© 2018 National Society of Professional Engineers, American Council of Engineering Companies, and American Society of Civil Engineers. All rights reserved.

c. *Construction Equipment Rental*

1) Rentals of all construction equipment and machinery, and the parts thereof, in accordance with rental agreements approved by Owner as to price (including any surcharge or special rates applicable to overtime use of the construction equipment or machinery), and the costs of transportation, loading, unloading, assembly, dismantling, and removal thereof. All such costs shall be in accordance with the terms of said rental agreements. The rental of any such equipment, machinery, or parts shall cease when the use thereof is no longer necessary for the Work.

2) Costs for equipment and machinery owned by Contractor or a Contractor-related entity shall be paid at a rate shown for such equipment in the equipment rental rate book specified in the Contract Documents or, in the absence of such a book, at rates no higher than standard rates paid in Williamson County, Tennessee. An hourly rate shall be computed by dividing the monthly rates by 176. These computed rates shall include all operating costs.

3) With respect to Work that is the result of a Change Order, Change Proposal, Claim, set-off, or other adjustment in Contract Price ("changed Work"), included costs shall be based on the time the equipment or machinery is in use on the changed Work and the costs of transportation, loading, unloading, assembly, dismantling, and removal when directly attributable to the changed Work. The cost of any such equipment or machinery, or parts thereof, shall cease to accrue when the use thereof is no longer necessary for the changed Work.

d. Sales, consumer, use, and other similar taxes related to the Work, and for which Contractor is responsible, as imposed by Laws and Regulations.

e. Deposits lost for causes other than negligence of any of the Contractor Parties, and royalty payments and fees for permits and licenses.

f. Losses and damages (and related expenses) caused by damage to the Work, not compensated by insurance or otherwise, sustained by Contractor in connection with the performance of the Work (except losses and damages within the deductible amounts of builder's risk or other property insurance established in accordance with Paragraph 6.04), provided such losses and damages have resulted from causes other than the negligence of any of the Contractor Parties. Such losses include settlements made with the written consent and approval of Owner. No such losses, damages, and expenses shall be included in the Cost of the Work for the purpose of determining Contractor's fee.

g. The cost of utilities, fuel, and sanitary facilities at the Site.

h. Minor expenses such as communication service at the Site, express and courier services, and similar petty cash items in connection with the Work.

i. The costs of premiums for all bonds and insurance that Contractor is required by the Contract Documents to purchase and maintain.

Copyright© 2018 National Society of Professional Engineers, American Council of Engineering Companies, and American Society of Civil Engineers. All rights reserved.

C. *Costs Excluded*: The term Cost of the Work does not include any of the following items:

1. Payroll costs and other compensation of Contractor's officers, executives, principals, general managers, engineers, architects, estimators, attorneys, auditors, accountants, purchasing and contracting agents, expediters, timekeepers, clerks, and other personnel employed by Contractor, whether at the Site or in Contractor's principal or branch office in connection with the Work, who are not specifically included in the agreed upon schedule of job classifications referred to in Paragraph 13.01.B.1 or specifically covered by Paragraph 13.01.B.4. The payroll costs and other compensation excluded here are to be considered administrative costs covered by the Contractor's fee.
2. The cost of purchasing, renting, or furnishing small tools and hand tools.
3. Expenses of Contractor's principal and branch offices other than Contractor's office at the Site.
4. Any part of Contractor's capital expenses, including interest on Contractor's capital employed for the Work and charges against Contractor for delinquent payments.
5. Costs due to the negligence or breach of contract of any of the Contractor Parties, including but not limited to, the correction of defective Work, disposal of materials or equipment wrongly supplied, and making good any damage to property.
6. Expenses incurred in preparing and advancing or defending Claims.
7. Other overhead or general expense costs of any kind and the costs of any item not specifically and expressly included in Paragraph 13.01.B.

D. *Contractor's Fee*

1. When the Work as a whole is performed on the basis of cost-plus-a-fee, then:
   a. Contractor's fee for the Work set forth in the Contract Documents as of the Effective Date of the Contract shall be determined as set forth in the Agreement.
   b. for any Work covered by a Change Order, Change Proposal, Claim, set-off, or other adjustment in Contract Price on the basis of Cost of the Work, Contractor's fee shall be determined as follows:
      1) When the fee for the Work as a whole is a percentage of the Cost of the Work, the fee shall automatically adjust as the Cost of the Work changes.
      2) When the fee for the Work as a whole is a fixed fee, the fee for any additions or deletions shall be determined in accordance with Paragraph 11.07.C.2.
2. When the Work as a whole is performed on the basis of a stipulated sum, or any other basis other than cost-plus-a-fee, then Contractor's fee for any Work covered by a Change Order, Change Proposal, Claim, set-off, or other adjustment in Contract Price on the basis of Cost of the Work shall be determined in accordance with Paragraph 11.07.C.2.

E. *Documentation and Audit*: Whenever the Cost of the Work for any purpose is to be determined pursuant to this Article 13, Contractor and pertinent Subcontractors shall establish and maintain records of the costs in accordance with generally accepted accounting practices. Subject to prior written notice, Owner shall be afforded reasonable access, during normal business hours, to all Contractor's accounts, records, books, correspondence,

Copyright© 2018 National Society of Professional Engineers, American Council of Engineering Companies, and American Society of Civil Engineers. All rights reserved.

instructions, drawings, receipts, vouchers, memoranda, and similar data relating to the Cost of the Work and Contractor's fee. Contractor shall preserve all such documents for a period of five years after Final Completion. Pertinent Subcontractors shall afford such access to Owner, and preserve such documents, to the same extent required of Contractor.

13.02 *Allowances*

A. It is understood that Contractor has included in the Contract Price all allowances so named in the Contract Documents and shall cause the Work so covered to be performed for no more than such sums and by persons or entities acceptable to Owner.

B. *Cash Allowances*: Contractor agrees that:

1. the cash allowances include the cost to Contractor (less any applicable trade discounts) of materials and equipment required by the allowances to be delivered at the Site, and all applicable taxes; and

2. Contractor's costs for unloading and handling on the Site, labor, installation, overhead, profit, and other expenses contemplated for the cash allowances have been included in the Contract Price and not in the allowances, and no demand for additional payment for any of the foregoing shall be valid.

C. *Owner's Contingency Allowance*: Contractor agrees that an Owner's contingency allowance, if any, is for the sole use of Owner to cover unanticipated costs.

D. Prior to Final Completion, an appropriate Change Order shall be issued to reflect actual amounts due Contractor for Work covered by allowances, and the Contract Price shall be correspondingly adjusted.

E. Contractor shall not exceed any allowance amount set forth in the Contract Documents, and shall not be entitled to payment for any such excess amounts, without Owner's prior written approval.

13.03 *Unit Price Work*

A. Where the Contract Documents provide that all or part of the Work is to be Unit Price Work, initially the Contract Price shall be deemed to include for all Unit Price Work an amount equal to the sum of the unit price for each separately identified item of Unit Price Work times the estimated quantity of each item as indicated in the Agreement.

B. The estimated quantities of items of Unit Price Work are not guaranteed and are solely for the purpose of comparison of Bids and determining an initial Contract Price. Payments to Contractor for Unit Price Work shall be based on actual quantities.

C. Each unit price shall be deemed to include an amount considered by Contractor to be adequate to cover Contractor's overhead and profit for each separately identified item.

D. Owner shall determine the actual quantities and classifications of Unit Price Work performed by Contractor. Owner shall review with Contractor the Owner's preliminary determinations on such matters before rendering a written decision thereon. Owner's written decision thereon shall be final and binding upon Contractor, and the final adjustment of Contract Price shall be set forth in a Change Order, subject to the provisions of the following paragraph.

Copyright© 2018 National Society of Professional Engineers, American Council of Engineering Companies, and American Society of Civil Engineers. All rights reserved.

E. *Adjustments in Unit Price*

1. Contractor or Owner shall be entitled to an adjustment in the unit price with respect to an item of Unit Price Work if:

   a. the quantity of the item of Unit Price Work performed by Contractor differs materially and significantly from the estimated quantity of such item indicated in the Agreement; and

   b. Contractor's unit costs to perform the item of Unit Price Work have changed materially and significantly as a result of the quantity change.

2. The adjustment in unit price shall account for and be coordinated with any related changes in quantities of other items of Work, and in Contractor's costs to perform such other Work, such that the resulting overall change in Contract Price is equitable to Owner and Contractor.

3. Adjusted unit prices shall apply to all units of that item.

ARTICLE 14—TESTS AND INSPECTIONS; CORRECTION, REMOVAL, OR ACCEPTANCE OF DEFECTIVE WORK

14.01 *Access to Work*

A. Owner, Engineer, their consultants and other representatives and personnel of Owner, independent testing laboratories, and authorities having jurisdiction have access to the Site and the Work at reasonable times for their observation, inspection, and testing. Contractor shall provide them proper and safe conditions for such access and advise them of Contractor's safety procedures and programs so that they can comply with such procedures and programs as applicable.

14.02 *Tests, Inspections, and Approvals*

A. Contractor shall give Owner timely notice of readiness of the Work (or specific parts thereof) for all required inspections and tests, and shall cooperate with inspection and testing personnel to facilitate required inspections and tests.

B. Owner shall retain and pay for the services of an independent inspector, testing laboratory, or other qualified individual or entity to perform all inspections and tests expressly required by the Contract Documents to be furnished and paid for by Owner, except that costs incurred in connection with tests or inspections of covered Work shall be governed by the provisions of Paragraph 14.05.

C. If Laws or Regulations of any public body having jurisdiction require any Work specifically to be inspected, tested, or approved by an employee or other representative of such public body, Contractor shall assume full responsibility for arranging and obtaining such inspections, tests, or approvals, pay all costs in connection therewith, and furnish Owner the required certificates of inspection or approval.

D. Contractor shall be responsible for arranging, obtaining, and paying for all inspections and tests required:

1. by the Contract Documents, unless the Contract Documents expressly allocate responsibility for a specific inspection or test to Owner;

Copyright© 2018 National Society of Professional Engineers, American Council of Engineering Companies, and American Society of Civil Engineers. All rights reserved.

2. to attain Owner's acceptance of materials or equipment to be incorporated in the Work;
3. by manufacturers of equipment furnished under the Contract Documents;
4. for testing, adjusting, and balancing of mechanical, electrical, and other equipment to be incorporated into the Work; and
5. for acceptance of materials, mix designs, or equipment submitted for approval prior to Contractor's purchase thereof for incorporation in the Work.

Such inspections and tests shall be performed by independent inspectors, testing laboratories, or other qualified individuals or entities acceptable to Owner.

E. If the Contract Documents require the Work to be approved by Owner or another designated individual or entity, then Contractor shall assume full responsibility for arranging and obtaining such approvals.

F. If any Work (or the work of others) that is to be inspected, tested, or approved is covered by Contractor without written concurrence of Owner, Contractor shall, if requested by Owner, uncover such Work for observation. Such uncovering shall be at Contractor's expense unless Contractor had given Owner timely notice of Contractor's intention to cover the same and Owner had not acted with reasonable promptness in response to such notice.

14.03 *Defective Work*

A. *Contractor's Obligation*: It is Contractor's obligation to assure that the Work is not defective.

B. *Owner's Authority*: Owner has the authority to determine whether Work is defective, and to reject defective Work.

C. *Notice of Defects*: Reasonably timely written notice of all defective Work of which Owner has actual knowledge shall be given to Contractor.

D. *Correction, or Removal and Replacement*: Promptly after receipt of written notice of defective Work, Contractor shall correct all such defective Work, whether or not fabricated, installed, or completed, or, if Owner has rejected the defective Work, remove it from the Project and replace it with Work that is not defective.

E. *Preservation of Warranties*: When correcting defective Work, Contractor shall take no action that would void or otherwise impair Owner's warranty and guarantee, if any, on said Work.

F. *Costs and Damages*: In addition to its correction, removal, and replacement obligations with respect to defective Work, Contractor shall pay all claims, costs, losses, and damages arising out of or relating to defective Work, including but not limited to the cost of the inspection, testing, correction, removal, replacement, or reconstruction of such defective Work, fines levied against Owner by governmental authorities because the Work is defective, and the costs of repair or replacement of work of others resulting from defective Work. Prior to Final Completion, if Owner and Contractor are unable to agree as to the measure of such claims, costs, losses, and damages resulting from defective Work, then Owner may impose a set-off against payments due under Article 15.

14.04 *Acceptance of Defective Work*

A. If, instead of requiring correction or removal and replacement of defective Work, Owner prefers to accept it, Owner may do so. Contractor shall pay all claims, costs, losses, and

Copyright© 2018 National Society of Professional Engineers, American Council of Engineering Companies, and American Society of Civil Engineers. All rights reserved.

damages attributable to Owner's evaluation of and determination to accept such defective Work, and for the diminished value of the Work to the extent not otherwise paid by Contractor. If any such acceptance occurs prior to Final Completion, the necessary revisions in the Contract Documents with respect to the Work shall be incorporated in a Change Order. If the parties are unable to agree as to the decrease in the Contract Price, reflecting the diminished value of Work so accepted, then Owner may impose a set-off against payments due under Article 15. If the acceptance of defective Work occurs after Final Completion, Contractor shall pay an appropriate amount to Owner.

14.05 *Uncovering Work*

A. Owner has the authority to require additional inspection or testing of the Work, whether or not the Work is fabricated, installed, or completed.

B. If any Work is covered contrary to the written request of Owner, then Contractor shall, if requested by Owner, uncover such Work for Owner's observation, and then replace the covering, all at Contractor's expense.

C. If Owner considers it necessary or advisable that covered Work be observed by Owner or inspected or tested by others, then Contractor, at Owner's request, shall uncover, expose, or otherwise make available for observation, inspection, or testing as Owner requires, that portion of the Work in question, and provide all necessary labor, material, and equipment.

1. If it is found that the uncovered Work is defective, Contractor shall be responsible for all claims, costs, losses, and damages arising out of or relating to such uncovering, exposure, observation, inspection, and testing, and of satisfactory replacement or reconstruction (including but not limited to all costs of repair or replacement of work of others); and pending Contractor's full discharge of this responsibility the Owner shall be entitled to impose a reasonable set-off against payments due under Article 15.

2. If the uncovered Work is not found to be defective, Contractor shall be allowed an increase in the Contract Price or an extension of the Contract Times directly attributable to such uncovering, exposure, observation, inspection, testing, replacement, and reconstruction. If the parties are unable to agree as to the amount or extent thereof, then Contractor may submit a Change Proposal within 14 days after the determination that the Work is not defective.

14.06 *Owner May Stop the Work*

A. If the Work is defective, or Contractor fails to supply sufficient skilled workers or suitable materials or equipment, or fails to perform the Work in such a way that the completed Work shall conform to the Contract Documents, then Owner may order Contractor to stop the Work, or any portion thereof, until the cause for such order has been eliminated; however, this right of Owner to stop the Work shall not give rise to any duty on the part of Owner to exercise this right for the benefit of any of the Contractor Parties.

14.07 *Owner May Correct Defective Work*

A. If Contractor fails within a reasonable time after written notice from Owner to correct defective Work, or to remove and replace defective Work as required by Owner, then Owner may, after 7 days' written notice to Contractor, correct or remedy any such deficiency.

Copyright© 2018 National Society of Professional Engineers, American Council of Engineering Companies, and American Society of Civil Engineers. All rights reserved.

B. In exercising the rights and remedies under this Paragraph 14.07, Owner shall proceed expeditiously. In connection with such corrective or remedial action, Owner may exclude Contractor from all or part of the Site, take possession of all or part of the Work and suspend Contractor's services related thereto, and incorporate in the Work all materials and equipment stored at the Site or for which Owner has paid Contractor but which are stored elsewhere. Contractor shall allow Owner, Owner's representatives, agents and employees, Owner's other contractors, and Engineer and Engineer's consultants access to the Site to enable Owner to exercise the rights and remedies under this paragraph.

C. All claims, costs, losses, and damages incurred or sustained by Owner in exercising the rights and remedies under this Paragraph 14.07 shall be charged against Contractor as set-offs against payments due under Article 15. Such claims, costs, losses and damages shall include but not be limited to all costs of repair, or replacement of work of others destroyed or damaged by correction, removal, or replacement of Contractor's defective Work.

D. Contractor shall not be allowed an extension of the Contract Times because of any delay in the performance of the Work attributable to the exercise by Owner of Owner's rights and remedies under this Paragraph 14.07.

ARTICLE 15—PAYMENTS TO CONTRACTOR; SET-OFFS; COMPLETION; CORRECTION PERIOD

15.01 *Progress Payments*

A. *Basis for Progress Payments*: The Schedule of Values established as provided in Article 2 shall serve as the basis for progress payments and shall be incorporated into a form of Application for Payment acceptable to Owner. Progress payments for Unit Price Work shall be based on the number of units completed during the pay period, as determined under the provisions of Paragraph 13.03. Progress payments for cost-based Work shall be based on Cost of the Work completed by Contractor during the pay period.

B. *Applications for Payments*

1. Not more often than once a month, Contractor shall submit to Owner for review an Application for Payment filled out and signed by Contractor covering the Work completed as of the date of the Application and accompanied by such supporting documentation as is required by the Contract Documents.

2. If payment is requested on the basis of materials and equipment not incorporated in the Work but delivered and suitably stored at the Site or at another location agreed to in writing, the Application for Payment shall also be accompanied by: (a) a bill of sale, invoice, copies of subcontract or purchase order payments, or other documentation establishing full payment by Contractor for the materials and equipment; (b) at Owner's request, documentation warranting that Owner has received the materials and equipment free and clear of all Liens; and (c) evidence that the materials and equipment are covered by appropriate property insurance, a warehouse bond, or other arrangements to protect Owner's interest therein, all of which shall be satisfactory to Owner.

3. Beginning with the second Application for Payment, each Application shall include an affidavit of Contractor, acceptable to Owner, stating that all previous progress payments

Copyright© 2018 National Society of Professional Engineers, American Council of Engineering Companies, and American Society of Civil Engineers. All rights reserved.

received by Contractor have been applied to discharge Contractor's legitimate obligations associated with prior Applications for Payment.

C. *Review of Applications*

1. Owner may, after receipt of each Application for Payment, including each resubmittal, return the Application to Contractor indicating in writing any reasons for refusing the Application in whole or in part. In such case, Contractor shall make the necessary corrections and resubmit the Application.

2. Contractor's Application for Payment shall constitute a representation by Contractor to Owner that to the best of Contractor's knowledge, information and belief:

   a. the Work has progressed to the point indicated;

   b. the quality of the Work is generally in accordance with the Contract Documents; and

   c. the conditions precedent to Contractor's being entitled to such payment appear to have been fulfilled.

3. By approving any Application for Payment Owner shall not be deemed to have represented that:

   a. inspections made to check the quality or the quantity of the Work as it has been performed have been exhaustive, extended to every aspect of the Work in progress, or involved detailed inspections of the Work; or

   b. there are not other matters or issues between the parties that might entitle Owner to withhold payment to Contractor.

4. Owner may reject, in whole or in part, an Application for Payment if necessary in Owner's opinion to protect Owner from loss because:

   a. the Work is defective, requiring correction or replacement;

   b. the Contract Price has been reduced by Change Orders;

   c. Owner has been required to correct defective Work in accordance with Paragraph 14.07, or has accepted defective Work pursuant to Paragraph 14.04;

   d. Owner has been required to remove, remediate, or otherwise address a Hazardous Environmental Condition for which Contractor is responsible; or

   e. Owner has actual knowledge of the occurrence of any of the events that would constitute a default by Contractor.

D. *Payment Becomes Due*

1. Thirty days after Owner's approval of the Application for Payment, the amount approved by Owner (subject to any Owner set-offs and Owner's rights to withhold payment under this Paragraph 15.01) shall become due, and when due shall be paid by Owner to Contractor.

Copyright© 2018 National Society of Professional Engineers, American Council of Engineering Companies, and American Society of Civil Engineers. All rights reserved.

E. *Reductions in Payment by Owner*

1. In addition to any reductions in payment by Owner under Paragraph 15.01.C, Owner is entitled to impose a set-off against payment, and withhold payment in whole or in part, based on any of the following:

   a. Claims have been made against Owner based on Contractor's conduct in the performance or furnishing of the Work, or Owner has incurred costs, losses, or damages resulting from Contractor's conduct in the performance or furnishing of the Work, including but not limited to claims, costs, losses, or damages from workplace injuries, adjacent property damage, non-compliance with Laws and Regulations, or patent infringement;

   b. Contractor has failed to take reasonable and customary measures to avoid damage, delay, disruption, and interference with other work at or adjacent to the Site;

   c. Contractor has failed to provide and maintain required bonds or insurance;

   d. Owner has been required to remove, remediate, or otherwise address a Hazardous Environmental Condition for which Contractor is responsible;

   e. Owner has incurred extra charges or engineering costs related to Submittal reviews, evaluations of proposed substitutes, tests and inspections, or return visits to manufacturing or assembly facilities;

   f. The Work is defective, requiring correction or replacement;

   g. Owner has been required to correct defective Work in accordance with Paragraph 14.07, or has accepted defective Work pursuant to Paragraph 14.04;

   h. The Contract Price has been reduced by Change Orders;

   i. An event has occurred that would constitute a default by Contractor and therefore justify a termination of the Contract for cause;

   j. Liquidated or other damages have accrued as a result of Contractor's failure to achieve Milestones, Substantial Completion, or Final Completion of the Work;

   k. Liens have been asserted or filed in connection with the Work, except where Contractor has delivered a specific bond satisfactory to Owner to secure the satisfaction and discharge of such Liens; or

   l. Other items entitle Owner to impose a set-off against the amount requested.

2. If Owner withholds or imposes any set-off against payment, Owner shall give Contractor prompt written notice stating the reasons for such action and the specific amount of the reduction, and promptly pay Contractor any amount remaining after deduction of the amount so withheld. Owner shall promptly pay Contractor the amount so withheld, or any adjustment thereto agreed to by Owner and Contractor, if Contractor remedies the reasons for such action. The reduction imposed shall be binding on Contractor unless it duly submits a Change Proposal contesting the reduction.

3. Upon a subsequent determination that Owner's refusal of payment was not justified, the amount wrongfully withheld shall be treated as an amount due as determined by Paragraph 15.01.D.1.

Copyright© 2018 National Society of Professional Engineers, American Council of Engineering Companies, and American Society of Civil Engineers. All rights reserved.

F. If Owner reasonably believes it is necessary, Owner may, at its sole option, issue joint checks to Contractor and any Subcontractor or Supplier, or issue direct payments to any Subcontractor or Supplier, to whom Contractor has failed to make payment for Work properly performed or material or equipment suitably delivered.

15.02 *Contractor's Warranty of Title*

A. Contractor warrants and guarantees that title to all Work, materials, and equipment performed and furnished under the Contract shall pass to Owner free and clear of (1) all Liens and other title defects, and (2) all patent, licensing, copyright, or royalty obligations, upon payment by Owner.

15.03 *Substantial Completion*

A. When Contractor considers the entire Work ready for its intended use, Contractor shall notify Owner in writing that the entire Work is substantially complete and submit to Owner an initial draft of punch list items to be completed or corrected before Final Completion.

B. Promptly after Contractor's notification, Owner and Contractor shall make an inspection of the Work to determine the status of completion. If Owner does not consider the Work substantially complete, Owner shall notify Contractor in writing, giving the reasons therefor.

C. If Owner considers the Work substantially complete, Owner shall deliver to Contractor a revised punch list of items to be completed or corrected, reflecting Owner's changes, if any, to the initial draft punch list.

D. At the time of Owner's receipt of Contractor's initial notification that Contractor believes the Work is substantially complete, Owner and Contractor also shall confer regarding Owner's use or occupancy of the Work following Substantial Completion, review the builder's risk insurance policy with respect to the end of the builder's risk coverage, and confirm the transition to coverage of the Work under a permanent property insurance policy held by Owner. Unless Owner and Contractor agree otherwise in writing, Owner shall bear responsibility for security, operation, protection of the Work, property insurance, maintenance, heat, and utilities upon Owner's use or occupancy of the Work.

E. After Substantial Completion, the Contractor shall promptly begin work on the punch list of items to be completed or corrected prior to Final Completion. In appropriate cases, Contractor may submit monthly Applications for Payment for completed punch list items, following the progress payment procedures set forth in Paragraph 15.01.

F. Owner shall have the right to exclude Contractor from the Site after the date of Substantial Completion, subject to allowing Contractor reasonable access to remove its property and complete or correct items on the punch list.

15.04 *Partial Use or Occupancy*

A. Prior to Substantial Completion of all the Work, Owner may use or occupy any substantially completed part of the Work that has specifically been identified in the Contract Documents, or that Owner and Contractor agree constitutes a separately functioning and usable part of the Work that can be used by Owner for its intended purpose without significant interference

Copyright© 2018 National Society of Professional Engineers, American Council of Engineering Companies, and American Society of Civil Engineers. All rights reserved.

with Contractor's performance of the remainder of the Work, subject to the following conditions:

1. At any time, Owner may request in writing that Contractor permit Owner to use or occupy any such part of the Work that Owner believes to be substantially complete. If and when Contractor agrees that such part of the Work is substantially complete, Contractor and Owner shall follow the procedures of Paragraph 15.03.A through 15.03.E for that part of the Work.

2. At any time, Contractor may notify Owner in writing that Contractor considers any such part of the Work substantially complete and request Owner to follow the procedures of Paragraph 15.03.A through 15.03.E for that part of the Work.

3. Within a reasonable time after either such request, Owner and Contractor shall make an inspection of that part of the Work to determine its status of completion. If Owner does not consider that part of the Work to be substantially complete, Owner shall notify Contractor in writing giving the reasons therefor. If Owner considers that part of the Work to be substantially complete, the provisions of Paragraph 15.03 shall apply with respect to certification of Substantial Completion of that part of the Work and the division of responsibility in respect thereof and access thereto.

4. No use or occupancy or separate operation of part of the Work may occur prior to compliance with the requirements of Paragraph 6.04 regarding builder's risk or other property insurance.

15.05 *Final Inspection*

A. Upon written notice from Contractor that it considers the entire Work or an agreed portion thereof to be finally complete, Owner shall promptly make a final inspection with Contractor and shall notify Contractor in writing of all particulars in which this inspection reveals that the Work, or agreed portion thereof, is incomplete or defective. Contractor shall immediately take such measures as are necessary to complete such Work and remedy such deficiencies.

15.06 *Final Completion and Payment*

A. *Application for Payment*

1. After Contractor has, in the opinion of Owner, satisfactorily completed all corrections and other Work identified during the final inspection and has delivered, in accordance with the Contract Documents, all maintenance and operating instructions, schedules, guarantees, bonds, certificates or other evidence of insurance, certificates of inspection, annotated record documents (as provided in Paragraph 7.12), and other documents, Contractor may make application for final payment.

2. The final Application for Payment shall be accompanied (except as previously delivered) by:

   a. all documentation called for in, and in the format required by, the Contract Documents, including but not limited to as-built drawings and specifications reflecting all changes to, and the final condition of, the Work as constructed;

   b. consent of all sureties to final payment;

Copyright© 2018 National Society of Professional Engineers, American Council of Engineering Companies, and American Society of Civil Engineers. All rights reserved.

c. satisfactory evidence that all title issues have been resolved such that title to all Work, materials, and equipment has passed to Owner free and clear of any Liens or other title defects, or will so pass upon final payment.

d. a list of all duly pending Change Proposals and Claims; and

e. complete and legally effective releases or waivers (satisfactory to Owner) of all Lien rights arising out of the Work, and of Liens filed in connection with the Work.

3. In lieu of the releases or waivers of Liens specified in Paragraph 15.06.A.2, if approved by Owner, Contractor may furnish receipts or releases in full and an affidavit of Contractor that: (a) the releases and receipts include all labor, services, material, and equipment for which a Lien could be filed; and (b) all payrolls, material and equipment bills, and other indebtedness connected with the Work for which Owner might in any way be responsible, or that might in any way result in Liens or other burdens on Owner's property, have been paid or otherwise satisfied. If any Subcontractor or Supplier fails to furnish such a release or receipt in full, Contractor may furnish a bond or other collateral satisfactory to Owner to indemnify Owner against any Lien, or Owner at its option may issue joint checks payable to Contractor and specified Subcontractors and Suppliers. In any event, to the full extent permitted by Laws and Regulations, Contractor shall defend (at Owner's option in its sole discretion), indemnify and hold harmless the Owner Parties from and against all claims, costs, losses, and damages (including but not limited to all fees and charges of engineers, architects, attorneys, and other professionals and all court or arbitration or other dispute resolution costs) arising out of or relating to any Liens and claims asserted or filed because of the Work.

B. *Owner's Review of Final Application for Payment*: If, on the basis of Owner's observation of the Work during construction and final inspection, and Owner's review of the final Application for Payment and accompanying documentation as required by the Contract Documents, Owner is satisfied that the Work has been finally completed and Contractor's other obligations under the Contract have been fulfilled, final payment shall become due under Paragraph 15.06.D Such determination shall account for any set-offs against payment that are necessary in Owner's opinion to protect Owner from loss for the reasons stated in Paragraphs 15.01.C and 15.01.E with respect to progress payments. Otherwise, Owner shall return the Application for Payment to Contractor, indicating in writing the reasons for refusing to make final payment, in which case Contractor shall make the necessary corrections and resubmit the Application for Payment.

C. *Completion of Work*: The Work is finally complete (subject to surviving obligations) when final payment is due from Owner to Contractor as established under this Paragraph 15.06.

D. *Final Payment Becomes Due*: Upon Final Completion, Owner shall set off against the amount for final payment any further sum to which Owner is entitled, including but not limited to set-offs for liquidated damages and set-offs allowed under Paragraphs 15.01.C and 15.01.E with respect to progress payments. Owner shall pay the resulting balance due to Contractor within 30 days after Owner's receipt and approval of the final Application for Payment from Contractor.

Copyright© 2018 National Society of Professional Engineers, American Council of Engineering Companies, and American Society of Civil Engineers. All rights reserved.

15.07 *Waiver of Claims*

A. By making final payment, Owner waives its claim or right to liquidated damages or other damages for late completion by Contractor, except as set forth in an outstanding Claim, appeal under the provisions of Article 17, set-off, or express reservation of rights by Owner. Owner reserves all other claims or rights after final payment.

B. The acceptance of final payment by Contractor shall constitute a waiver by Contractor of all claims and rights against Owner other than those pending matters that have been duly submitted as a Claim or appealed under the provisions of Article 17.

15.08 *Correction Period*

A. If, within one year after the date of Substantial Completion (or such longer period of time prescribed by the Contract Documents or the terms of any applicable warranty or guarantee required by or contained in the Contract Documents), Owner gives Contractor written notice that any Work has been found to be defective, or that Contractor's repair of any damages to the Site or adjacent areas has been found to be defective, then after receipt of such notice of defect Contractor shall promptly, without cost to Owner and in accordance with Owner's written instructions:

1. correct the defective repairs to the Site or such adjacent areas;
2. correct such defective Work;
3. remove the defective Work from the Project and replace it with Work that is not defective, if the defective Work has been rejected by Owner, and
4. satisfactorily correct or repair or remove and replace any damage to other Work, to the work of others, or to other land or areas resulting from the corrective measures.

B. Owner shall give Contractor reasonably timely notice of any such defect after Owner discovers it. If such notice is given after the end of the correction period, the notice shall be deemed a notice of defective Work under Paragraph 7.17.B.

C. If, after receipt of a notice of defect, Contractor does not promptly comply with the Owner's written instructions, or in an emergency where delay would cause serious risk of loss or damage, Owner may have the defective Work corrected or repaired or may have the rejected Work removed and replaced. Contractor shall pay all costs, losses, and damages (including but not limited to all fees and charges of engineers, architects, attorneys, and other professionals and all court or arbitration or other dispute resolution costs) arising out of or relating to such correction or repair or such removal and replacement (including but not limited to all costs of repair or replacement of work of others). Contractor's failure to pay such costs, losses, and damages within 10 days after invoice from Owner shall be deemed the start of an event giving rise to a Claim under Paragraph 12.01.B, such that any related Claim shall be brought within 30 days after the failure to pay.

D. In special circumstances where a particular item of equipment is placed in continuous service before Substantial Completion of all the Work, the correction period for that item may start to run from an earlier date if so provided in the Specifications.

E. Where defective Work (and damage to other Work resulting therefrom) has been corrected or removed and replaced under this paragraph, the correction period hereunder with respect

Copyright© 2018 National Society of Professional Engineers, American Council of Engineering Companies, and American Society of Civil Engineers. All rights reserved.

to such Work shall be extended for an additional period of one year after such correction or removal and replacement has been satisfactorily completed.

F. Contractor's obligations under this paragraph are in addition to all other obligations and warranties. The provisions of this paragraph are not to be construed as a substitute for, or a waiver of, the provisions of any applicable warranty or statute of limitation or repose.

ARTICLE 16—SUSPENSION OF WORK AND TERMINATION

16.01 *Owner May Suspend Work*

A. At any time and without cause, Owner may suspend the Work or any portion thereof for a period of not more than 90 consecutive days by written notice to Contractor. Such notice shall fix the date on which Work will be resumed. Contractor shall resume the Work on the date so fixed. Contractor shall be entitled to an extension of the Contract Times directly attributable to any such suspension, to the extent not caused by any of the Contractor Parties. Any Change Proposal seeking such adjustment shall be submitted no later than 14 days after the date fixed for resumption of Work.

16.02 *Contractor Default; Owner May Terminate the Contract for Cause*

A. The occurrence of any one or more of the following events shall constitute a default by Contractor and entitle Owner to all rights and remedies available to it under the Contract and Laws and Regulations, including but not limited to Owner's termination of the Contract for cause:

1. Contractor's failure to perform the Work in accordance with the Contract Documents (including but not limited to failure to supply sufficient skilled workers or suitable materials or equipment, or failure to adhere to the Progress Schedule);
2. Failure of Contractor to perform or otherwise to comply with a material term of the Contract Documents;
3. Contractor's disregard or violation of Laws or Regulations; or
4. Contractor's disregard of the authority of Owner or Engineer.

B. If one or more of the events identified in Paragraph 16.02.A occurs, then after giving Contractor (and any surety) 10 days' written notice that Owner is considering a declaration that Contractor is in default and termination of the Contract, Owner may proceed to:

1. declare Contractor to be in default, and give Contractor (and any surety) written notice that the Contract is terminated;
2. enforce the rights available to Owner under any applicable performance bond; and/or
3. exercise or pursue any other rights and remedies available to Owner under the Contract and Laws and Regulations.

C. Subject to the terms and operation of any applicable performance bond, if Owner has terminated the Contract for cause, Owner may exclude Contractor from the Site, take possession of the Work, incorporate in the Work all materials and equipment stored at the Site or for which Owner has paid Contractor but that are stored elsewhere, and complete the Work as Owner deems expedient.

Copyright© 2018 National Society of Professional Engineers, American Council of Engineering Companies, and American Society of Civil Engineers. All rights reserved.

D. Owner may not proceed with termination of the Contract under Paragraph 16.02.B if Contractor, within 7 days after receipt of notice of intent to terminate, begins to correct its failure to perform and diligently cures such failure.

E. If Owner proceeds as provided in Paragraph 16.02.B, Contractor shall not be entitled to receive any further payment until the Work is completed. If the unpaid balance of the Contract Price exceeds the cost to complete the Work, including but not limited to all related claims, costs, losses, and damages (including but not limited to all fees and charges of engineers, architects, attorneys, and other professionals) sustained by Owner, such excess shall be paid to Contractor. If the cost to complete the Work, including but not limited to such related claims, costs, losses, and damages exceeds such unpaid balance, Contractor shall pay the difference to Owner. When exercising any rights or remedies under this paragraph, Owner shall not be required to obtain the lowest price for the Work performed.

F. Where the Contract has been so terminated by Owner, the termination shall not affect any rights or remedies of Owner against Contractor then existing or that thereafter accrue, or any rights or remedies of Owner against Contractor or any surety under any payment bond or performance bond. Any retention or payment of money due Contractor by Owner shall not release Contractor from liability.

16.03 *Owner May Terminate the Contract for Convenience*

A. Upon 7 days' written notice to Contractor, Owner may, without cause and without prejudice to any other right or remedy of Owner, terminate the Contract. In such case, Contractor shall be paid for (without duplication of any items):

1. completed and acceptable Work performed in accordance with the Contract Documents prior to the effective date of termination, including fair and reasonable sums for overhead and profit on such Work;

2. expenses sustained prior to the effective date of termination in performing services and furnishing labor, materials, or equipment as required by the Contract Documents in connection with uncompleted Work, plus fair and reasonable sums for overhead and profit on such expenses; and

3. other reasonable expenses directly attributable to termination, including costs incurred to prepare a termination for convenience cost proposal.

B. Contractor shall not be paid for any loss of anticipated profits or revenue, post-termination overhead costs, or other economic loss arising out of or resulting from such termination.

16.04 *Contractor May Stop Work or Terminate the Contract*

A. If, through no act or fault of Contractor, (1) the Work is suspended for more than 90 consecutive days by Owner or under an order of court or other public authority, or (2) Owner fails to act on any Application for Payment within 60 days after it is submitted, or (3) Owner fails for 30 days to pay Contractor any sum finally determined to be due, then Contractor may, upon 7 days' written notice to Owner, and provided Owner does not remedy such suspension or failure within that time, terminate the Contract and recover from Owner payment on the same terms as provided in Paragraph 16.03.

B. In lieu of terminating the Contract and without prejudice to any other right or remedy, if Owner has failed to act on an Application for Payment within 60 days after it is submitted, or

Copyright© 2018 National Society of Professional Engineers, American Council of Engineering Companies, and American Society of Civil Engineers. All rights reserved.

Owner has failed for 30 days to pay Contractor any sum finally determined to be due, Contractor may, 7 days after written notice to Owner, stop the Work until payment is made of all such amounts due Contractor. The provisions of this paragraph are not intended to preclude Contractor from submitting a Change Proposal for an adjustment in the Contract directly attributable to Contractor's stopping the Work as permitted by this paragraph.

ARTICLE 17—FINAL RESOLUTION OF DISPUTES

17.01 *Methods and Procedures*

A. *Disputes Subject to Final Resolution*: The following disputed matters are subject to final resolution under the provisions of this article:

1. A timely appeal of an approval in part and denial in part of a Claim, or of a denial in full, pursuant to Article 12; and

2. Disputes between Owner and Contractor concerning the Work, or obligations under the Contract Documents, that arise after Final Completion.

B. *Final Resolution of Disputes*: For any dispute subject to resolution under this article, Owner or Contractor may:

1. Before bringing any action in court pertaining to any Claim, dispute or other matter in question arising out of or related to the Contract Documents or the breach thereof, the claimant shall first provide notice of the Claim, dispute or other matter in question to the other party to this Contract in writing and make a specific demand for settlement of said Claim, dispute or matter. If the other party fails to agree to an acceptable resolution to said Claim, dispute or matter, or offer a specific counter-proposal thereto within five days after the receipt of such notice, or the claimant fails to accept any counter-proposal from the other party within five days after receipt thereof, either party shall be free to submit the Claim, dispute or other matter to litigation in accordance with Paragraph 17.01.B.2.

2. Any Claim, dispute, or other matter in question arising out of or related to the Contract or the Project shall be litigated in the Tennessee Judicial Circuit Court in and for Williamson, County, Tennessee, and the prevailing party to any such litigation shall be entitled to an award of all reasonable attorneys' and experts' fees, expenses and court costs incurred by such prevailing party against the non-prevailing party, including in connection with any appeals.

ARTICLE 18—MISCELLANEOUS

18.01 *Giving Notice*

A. Whenever any provision of the Contract requires the giving of written notice to Owner or Contractor, it shall be deemed to have been validly given only if delivered:

1. in person, by a commercial courier service or otherwise, to the recipient's place of business;

2. by registered or certified mail, postage prepaid, to the recipient's place of business; or

3. by e-mail to the recipient, if also sent by one of the methods in Paragraph 18.01.A.1 or .2.

Copyright© 2018 National Society of Professional Engineers, American Council of Engineering Companies, and American Society of Civil Engineers. All rights reserved.

18.02 *Computation of Times*

A. When any period of time is referred to in the Contract by days, it shall be computed to exclude the first and include the last day of such period. If the last day of any such period falls on a Saturday or Sunday or legal holiday, such day shall be omitted from the computation.

18.03 *Cumulative Remedies*

A. Except as otherwise specifically provided in the Contract Documents, the duties and obligations imposed by the Contract Documents, and the rights and remedies available thereunder, are in addition to, and are not to be construed in any way as a limitation of, any rights and remedies available to any or all of them that are otherwise imposed or available by Laws or Regulations, by warranty or guarantee, or by other provisions of the Contract. The provisions of this paragraph shall be as effective as if repeated specifically in the Contract Documents in connection with each particular duty, obligation, right, and remedy to which they apply.

18.04 *Limitation of Damages*

A. With respect to any and all Change Proposals, Claims, disputes subject to final resolution, and other matters at issue, neither the Owner Parties nor Engineer, nor any of their consultants or subcontractors, shall be liable to Contractor for any claims, costs, losses, or damages sustained by Contractor on or in connection with any other project or anticipated project.

18.05 *No Waiver*

A. A party's non-enforcement of any provision shall not constitute a waiver of that provision, nor shall it affect the enforceability of that provision or of the remainder of this Contract.

18.06 *Survival of Obligations*

A. All representations, indemnifications, warranties, and guarantees made in, required by, or given in accordance with the Contract, as well as all other obligations in the Contract that logically should survive Final Completion or earlier termination of the Contract, shall survive Final Completion or earlier termination of the Contract.

18.07 *Controlling Law*

A. This Contract is to be governed by the laws of the State of Tennessee.

18.08 *Assignment of Contract*

A. Unless expressly agreed to elsewhere in the Contract, no assignment by a party to this Contract of any rights under or interests in the Contract shall be binding on the other party without the written consent of the party sought to be bound; and, specifically but without limitation, money that becomes due and money that is due may not be assigned without such consent (except to the extent that the effect of this restriction is limited by law), and unless specifically stated to the contrary in any written consent to an assignment, no assignment shall release or discharge the assignor from any duty or responsibility under the Contract.

18.09 *Successors and Assigns*

A. Owner and Contractor each binds itself, its successors and assigns to the other party hereto and its successors and assigns in respect to all covenants, agreements, and obligations contained in the Contract Documents.

Copyright© 2018 National Society of Professional Engineers, American Council of Engineering Companies, and American Society of Civil Engineers. All rights reserved.

18.10 *Headings*

A. Article and paragraph headings are inserted for convenience only and do not constitute parts of these General Conditions.

Copyright© 2018 National Society of Professional Engineers, American Council of Engineering Companies, and American Society of Civil Engineers. All rights reserved.

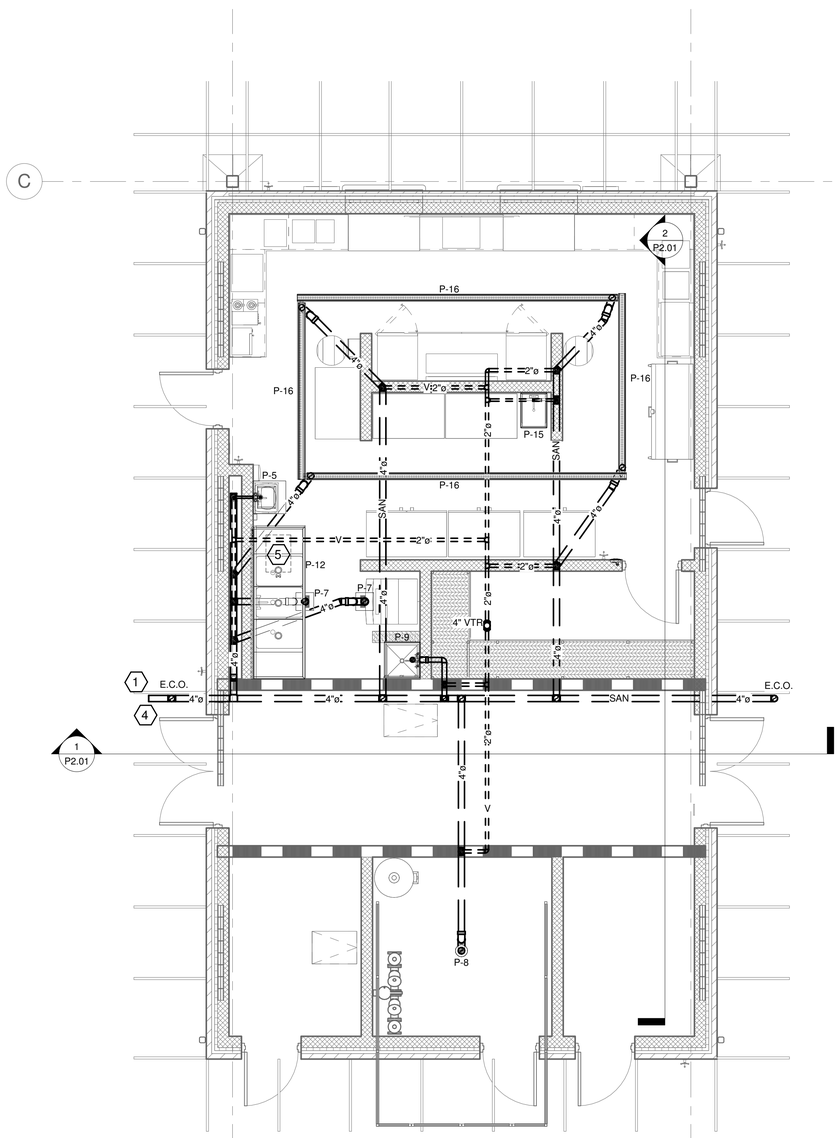

1 PLUMBING WASTE & VENT FLOOR PLAN-BUILDING A
1/4" = 1'-0"

PLUMBING PLAN NOTES:

1 REFER TO THE CIVIL SITE PLAN FOR CONTINUATION OF THE LINE.

2 REFER TO THE WATER ENTRY DETAIL 2 ON SHEET PM2.01.

3 PROVIDE A 1/2" UNDERGROUND COLD WATER LINE FROM A TRAP PRIMER TO TIE INTO THE DRAIN. (SEE DETAIL 4 ON SHEET PM.01)

4 INVERT DEPTH IS APPROXIMATELY 3'.

5 JR SMITH #8035 GREASE INTERCEPTOR(GI): 35 GPM; 70 LBS. GREASE CAPACITY. TIE THE THREE DRAINS FROM THE SINK TO THE GI. ROUTE A DRAIN FROM THE GI TO THE FLOOR SINK WITH AN OPEN AIR GAP.

PLUMBING GENERAL NOTES:

1. PAINT ALL ROOF AND WALL PENETRATIONS TO MATCH ROOF/WALL COLOR. COLOR TO BE SELECTED BY THE ARCHITECT.

2. NO HOSE BIBB SHALL BE INSTALLED ON SPLIT FACE BLOCKS AND/OR JOINTS. HOSE BIBB SHALL BE MOUNTED ON SMOOTH FACE OF CMU AT THE HORIZONTAL CENTERLINE OF THE BLOCK, CAULK AROUND THE HOSE BIBB.

3. ALL WASTE PIPING SHALL BE 4" UNLESS OTHERWISE NOTED.

4. ALL VENT PIPING SHALL BE 2" UNLESS OTHERWISE NOTED.

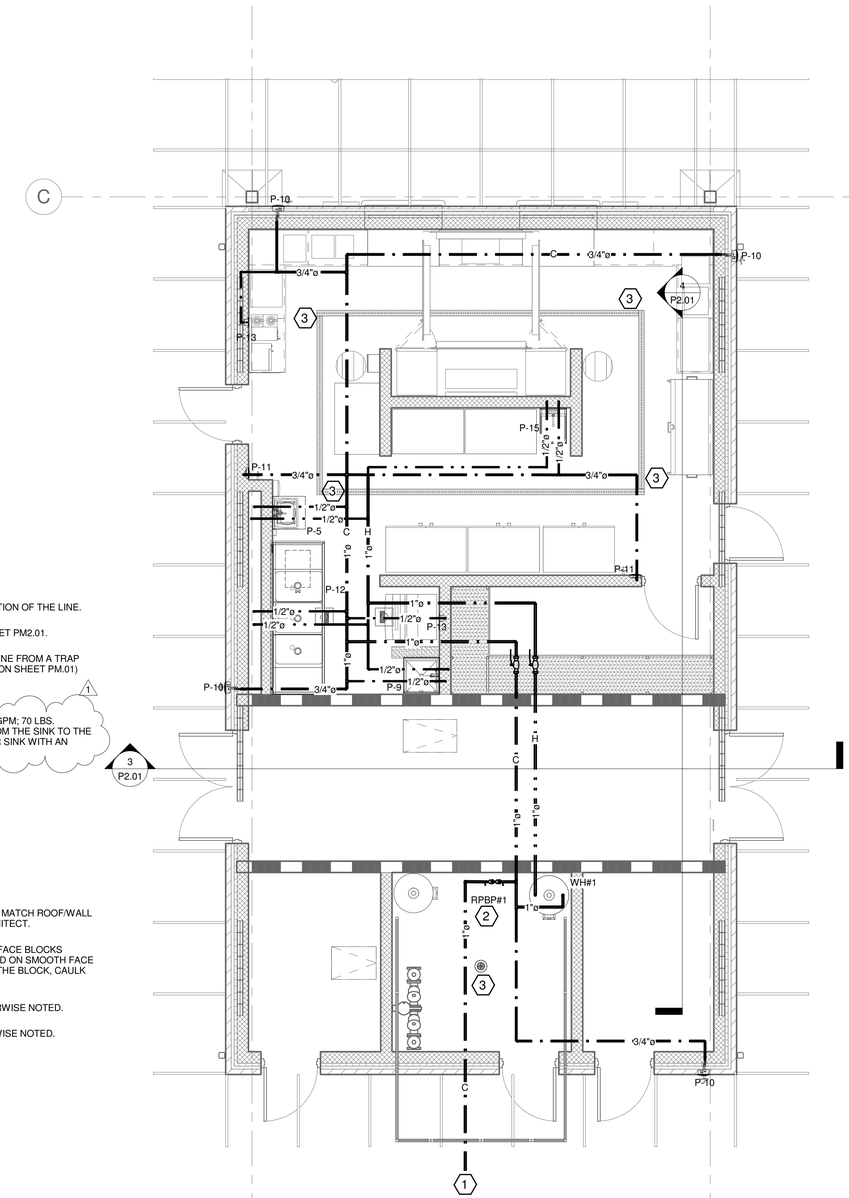

2 PLUMBING WATER FLOOR PLAN-BUILDING A
1/4" = 1'-0"

LOSE DESIGN
SPACES FOR LIFE.

THIS DRAWING AND THE DESIGN SHOWN IS THE PROPERTY OF THE ARCHITECT. REPRODUCTION, COPYING, OR USE OF THIS DRAWING WITHOUT THEIR WRITTEN CONSENT IS PROHIBITED, AND ANY INFRINGEMENT IS SUBJECT TO LEGAL ACTION.

TIMOTHY MICHAEL HARMS
REGISTERED ENGINEER
COMMERCIAL
No. 102530
STATE OF TENNESSEE
Timothy M. Harms
06-22-2020

HARMS
ENGINEERING, INC.
NASHVILLE, TENNESSEE
HARMSENGINEERING.NET

FREEDOM BALL FIELDS
C.O.F. AND F.S.S.D. BALL FIELD CONSTRUCTION
PREPARED FOR:
CITY OF FRANKLIN
750 NEW HIGHWAY 96 WEST, FRANKLIN, TENNESSEE 37064

SUBMITTALS / REVISIONS

NO	DATE	DESCRIPTION
1	06-22-20	Code Comments

SHEET TITLE
PLUMBING FLOOR PLANS - BUILDING A

PROJECT NO. 18062-1	DATE 03/20/2020
DRAWN BY TMH	SCALE 1/4" = 1'-0"
CHECKED BY TMH	

SHEET NO.
P1.01

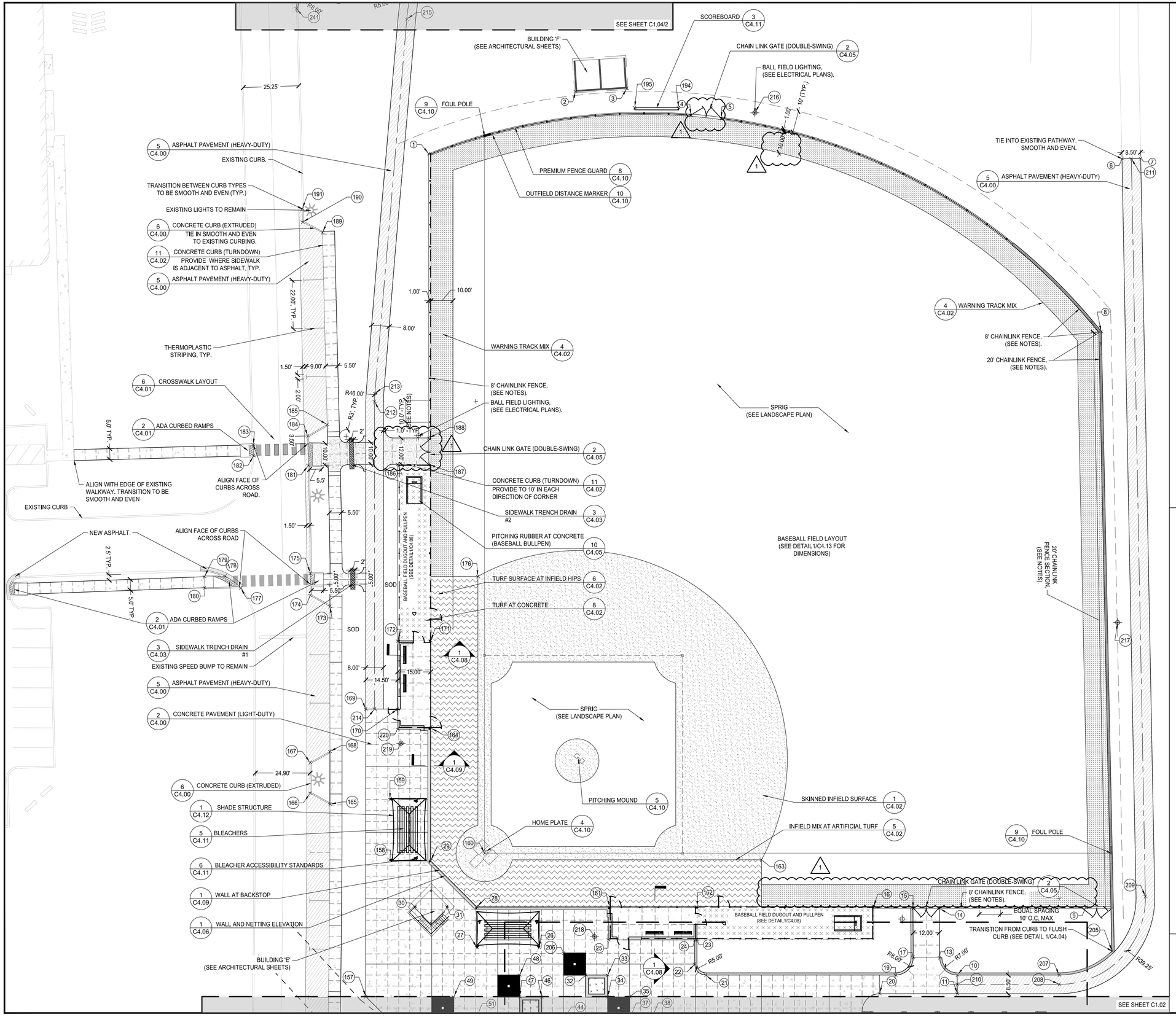

LAYOUT NOTES:

1. SEE SHEET 'C0.01 FOR GENERAL NOTES.
2. SEE ARCHITECTURAL SHEETS FOR BUILDINGS.
3. SEE DETAILS FOR DUGOUT AND DUGOUT WALL SYSTEM
4. INSTALL JOINTS WHERE SHOWN TO ALIGN TO WALLS, BUILDINGS, RADII, ETC. EVENLY SPACE BETWEEN ELEMENTS AS SHOWN. PROVIDE EXPANSION JOINTS BETWEEN CONCRETE PAVEMENT AND VERTICAL ELEMENTS (WALL, CURBS, ETC.). ALL JOINTS TO BE STRAIGHT AND TRUE.
5. LAYOUT ALL CURVES SMOOTHLY WITH NO ABRUPT CHANGES AT TANGENT POINTS.
6. ALL CURBS ARE DIMENSIONED TO THE FACE OF CURB.
7. ALL WALKWAYS ADJACENT TO ASPHALT SHALL HAVE A TURN-DOWN CURB.
8. CONTRACTOR TO TAKE ALL PRECAUTIONS TO FIND AND AVOID SITE UTILITIES. ALL UTILITIES ARE NOT SHOWN ON DRAWING. VERIFY LOCATIONS AND CONSIDER SUCH WHEN ESTIMATING.
9. ALL PAVEMENT MARKING AND TRAFFIC CONTROL DEVICES SHALL BE INSTALLED PER THE MANUAL ON UNIFORM TRAFFIC CONTROL DEVICES (MUTCD), LATEST EDITION.
10. ALL PAVEMENT MARKINGS TO BE THERMOPLASTIC, UNLESS OTHERWISE NOTED.
11. ALL CONSTRUCTION AND MATERIALS SHALL COMPLY WITH TDOT'S STANDARDS FOR ROADWAY AND BRIDGE CONSTRUCTION, LATEST EDITION.
12. ALL ANGLES ARE 90° UNLESS OTHERWISE NOTED.
13. SEE SHEET C4.13 FOR PLAY FIELD DIMENSIONS.
14. SEE DETAILS FOR CHAINLINK FENCE POST LAYOUT AT BACKSTOP AND DUGOUT.
15. CHAINLINK FENCE POST FOR FOUL LINE AND OUTFIELD TO BE EVENLY AND EQUAL SPACED TO ACCOMMODATE GATE OPENINGS AND FIELD SIZE.
16. CONTRACTOR RESPONSIBLE FOR RETAINING SURVEYOR TO LOCATE POINTS ACROSS ALL TRADES TO ENSURE LAYOUT COORDINATIN THROUGHOUT ENTIRETY OF PROJECT.

LAYOUT LEGEND:

- LOD — SITE BOUNDARY / LIMITS OF DISTURBANCE
- ASPHALT (HEAVY-DUTY)
- CONCRETE (LIGHT-DUTY)
- CONCRETE (HEAVY-DUTY)
- CHAIN LINK FENCE
- JOINTS
  - EXPANSION JOINT (EJ)
  - CONTROL JOINT (CJ)

0 20 40 60

SCALE: 1" = 20 '

TENNESSEE STATE PLANE COORDINATE SYSTEM, ZONE 5301, FIPSZONE 4100; NAD 83 DATUM

LOSE DESIGN SPACES FOR LIFE.

THIS DRAWING AND THE DESIGN SHOWN IS THE PROPERTY OF THE ARCHITECT. REPRODUCTION, COPYING, OR USE OF THIS DRAWING WITHOUT THEIR WRITTEN CONSENT IS PROHIBITED, AND ANY INFRINGEMENT IS SUBJECT TO LEGAL ACTION.

JOSHUA A. GULICK REGISTERED LANDSCAPE ARCHITECT STATE OF TENNESSEE AGRICULTURE COMMISSION 07/2019.

FREEDOM BALL FIELDS
C.O.F. AND F.S.S.D. BALL FIELD CONSTRUCTION
COF PROJECT #7139

CITY OF FRANKLIN

FRANKLIN TENNESSEE

SUBMITTALS / REVISIONS

NO.	DATE	DESCRIPTION
1	07.24.2020	MATERIALS, GATE SIZE, IRRIGATION

SHEET TITLE

LAYOUT PLAN

PROJECT NO. 18062-1	DATE 05/08/2020
DRAWN BY ZRK	SCALE 1" = 20'
CHECKED BY JG	
SHEET NO. C1.01	

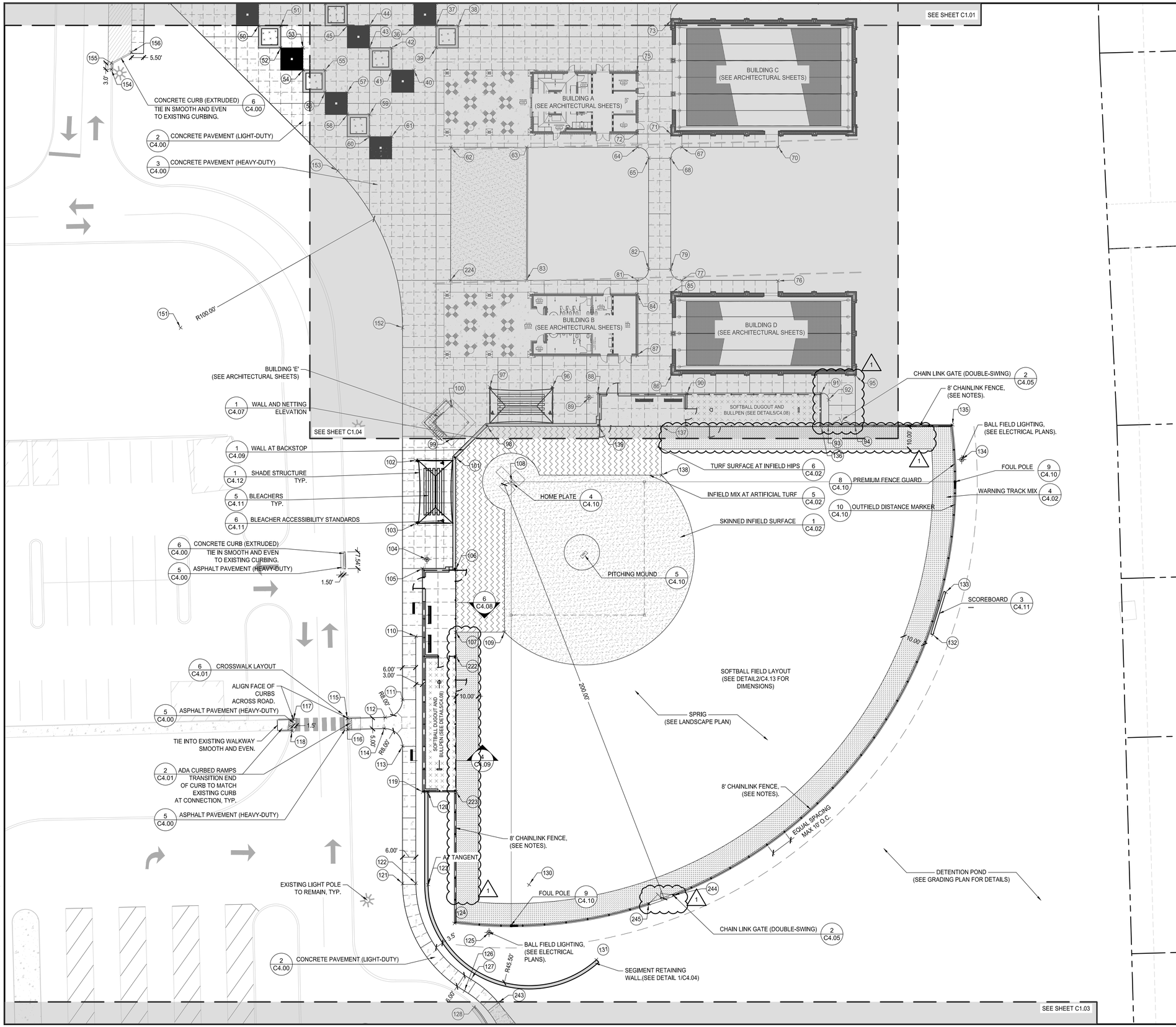

LAYOUT NOTES:

1. SEE SHEET 'C0.01 FOR GENERAL NOTES.
2. SEE ARCHITECTURAL SHEETS FOR BUILDINGS.
3. SEE DETAILS FOR DUGOUT AND DUGOUT WALL SYSTEM
4. INSTALL JOINTS WHERE SHOWN TO ALIGN TO WALLS, BUILDINGS, RADII, ETC. EVENLY SPACE BETWEEN ELEMENTS AS SHOWN. PROVIDE EXPANSION JOINTS BETWEEN CONCRETE PAVEMENT AND VERTICAL ELEMENTS (WALL, CURBS, ETC.). ALL JOINTS TO BE STRAIGHT AND TRUE.
5. LAYOUT ALL CURVES SMOOTHLY WITH NO ABRUPT CHANGES AT TANGENT POINTS.
6. ALL CURBS ARE DIMENSIONED TO THE FACE OF CURB.
7. ALL WALKWAYS ADJACENT TO ASPHALT SHALL HAVE A TURN-DOWN CURB.
8. CONTRACTOR TO TAKE ALL PRECAUTIONS TO FIND AND AVOID SITE UTILITIES. ALL UTILITIES ARE NOT SHOWN ON DRAWING. VERIFY LOCATIONS AND CONSIDER SUCH WHEN ESTIMATING.
9. ALL PAVEMENT MARKING AND TRAFFIC CONTROL DEVICES SHALL BE INSTALLED PER THE MANUAL ON UNIFORM TRAFFIC CONTROL DEVICES (MUTCD), LATEST EDITION.
10. ALL PAVEMENT MARKINGS TO BE THERMOPLASTIC, UNLESS OTHERWISE NOTED.
11. ALL CONSTRUCTION AND MATERIALS SHALL COMPLY WITH TDOT'S STANDARDS FOR ROADWAY AND BRIDGE CONSTRUCTION, LATEST EDITION.
12. ALL ANGLES ARE 90° UNLESS OTHERWISE NOTED.
13. SEE SHEET C4.13 FOR PLAY FIELD DIMENSIONS.
14. SEE DETAILS FOR CHAINLINK FENCE POST LAYOUT AT BACKSTOP AND DUGOUT.
15. CHAINLINK FENCE POST FOR FOUL LINE AND OUTFIELD TO BE EVENLY AND EQUAL SPACED TO ACCOMMODATE GATE OPENINGS AND FIELD SIZE.
16. CONTRACTOR RESPONSIBLE FOR RETAINING SURVEYOR TO LOCATE POINTS ACROSS ALL TRADES TO ENSURE LAYOUT COORDINATIN THROUGHOUT ENTIRETY OF PROJECT.

LAYOUT LEGEND:

- LOD — SITE BOUNDARY / LIMITS OF DISTURBANCE
- ASPHALT (HEAVY-DUTY)
- CONCRETE (LIGHT-DUTY)
- CONCRETE (HEAVY-DUTY)
- CHAIN LINK FENCE
- JOINTS
  - EXPANSION JOINT (EJ)
  - CONTROL JOINT (CJ)

SCALE: 1" = 20'

TENNESSEE STATE PLANE COORDINATE SYSTEM, ZONE 5301, FIPSZONE 4100; NAD 83 DATUM

LOSE DESIGN
SPACES FOR LIFE.

THIS DRAWING AND THE DESIGN SHOWN IS THE PROPERTY OF THE ARCHITECT. REPRODUCTION, COPYING, OR USE OF THIS DRAWING WITHOUT THEIR WRITTEN CONSENT IS PROHIBITED, AND ANY INFRINGEMENT IS SUBJECT TO LEGAL ACTION.

JOSHUA A. GULLICK REGISTERED AGRICULTURE LANDSCAPE ARCHITECT 2019.

FREEDOM BALL FIELDS
C.O.F. AND F.S.S.D. BALL FIELD CONSTRUCTION
COF PROJECT #7139

CITY OF FRANKLIN
FRANKLIN TENNESSEE

SUBMITTALS / REVISIONS

NO.	DATE	DESCRIPTION
1	07.24.2020	MATERIALS, GATE SIZE, IRRIGATION

SHEET TITLE: LAYOUT PLAN

PROJECT NO. 18062-1	DATE 05/08/2020
DRAWN BY ZRK	SCALE 1" = 20'
CHECKED BY JG	
SHEET NO. C1.02	

N:\2018-18062-1F_FSSD_Ball_Field_CONCAPDT_SHEETS-18062-1_C1.00_SITE_SERIES.dwg - Printed on 2020-07-23 at 12:39:52 PM.

Point Table			
Point #	Raw Description	Easting	Northing
1	1	1704856.9602	583879.0980
2	1	1704927.5558	583895.7613
3	1	1704950.7250	583893.2760
4		1704977.3644	583876.4051
5	1	1704990.8490	583872.6220
6	1	1705167.4758	583823.9594
7	1	1705175.8813	583822.6955
8	1	1705144.9597	583747.9687
9	1	1705094.1923	583490.7270
10	1	1705031.3784	583470.1994
11	1	1705029.9757	583461.8159
13	1	1705024.7940	583479.3844
14	1	1705028.4202	583501.5241
15	1	1705016.5780	583503.4637
16	1	1704999.1090	583507.3016
17	1	1705012.9782	583481.4856
19	1	1705003.7169	583474.8961
20	1	1704995.1290	583467.7327
21	1	1704918.5632	583489.3548
22	1	1704914.4707	583495.1212
23	1	1704917.2986	583505.8022
24	1	1704916.3127	583505.9695
25	1	1704877.6331	583512.5339
26	1	1704845.9192	583514.3587
27	1	1704817.9698	583519.1043
28	1	1704821.0044	583537.3589
29	1	1704803.8778	583561.4910
30	1	1704793.4648	583542.1550
31	1	1704807.7267	583539.7335
32	1	1704864.6976	583498.5008
33	1	1704874.5565	583496.8268
34	1	1704872.8825	583486.9679
35	1	1704882.7443	583485.2934
36	1	1704871.2086	583477.1090
37	1	1704881.0703	583475.4345
38	1	1704890.9263	583473.7610
39	1	1704879.3963	583465.5756
40	1	1704867.8592	583457.3915
41	1	1704858.0017	583459.0652
42	1	1704859.6757	583468.9241
43	1	1704849.8168	583470.5981
44	1	1704851.4899	583480.4564
45	1	1704841.6319	583482.1309
46	1	1704843.3059	583491.9898
47	1	1704833.4470	583493.6638
48	1	1704835.1210	583503.5227
49	1	1704803.8701	583498.6849
50	1	1704802.1937	583488.8264
51	1	1704812.0526	583487.1524
52	1	1704810.3786	583477.2935

Point Table			
Point #	Raw Description	Easting	Northing
53	1	1704820.2375	583475.6196
54	1	1704818.5660	583465.7603
55	1	1704828.4224	583464.0867
56	1	1704826.7523	583454.2271
57	1	1704836.6098	583452.5534
58	1	1704834.9344	583442.6948
59	1	1704844.7947	583441.0205
60	1	1704843.1207	583431.1616
61	1	1704852.9796	583429.4877
62	1	1704878.4955	583420.3115
63	1	1704912.1875	583414.5908
64	1	1704961.3592	583406.2418
65	1	1704965.4514	583400.4754
67	1	1704981.0441	583402.8994
68	1	1704975.3104	583398.8018
70	1	1705023.9629	583395.6121
71	1	1704977.5226	583409.1553
72	1	1704962.2818	583412.6412
73	1	1704986.2200	583460.3594
75	1	1704966.8529	583439.5632
76	1	1705013.7190	583336.2768
77	1	1704971.0380	583343.7708
79	1	1704966.9455	583349.5372
81	1	1704951.3202	583347.1188
82	1	1704957.0866	583351.2112
83	1	1704901.9638	583355.4992
84	1	1704950.0947	583340.8659
85	1	1704965.6147	583339.0918
86	1	1704959.4706	583302.8379
87	1	1704945.5244	583313.9491
88	1	1704925.2382	583300.0664
89	1	1704920.9075	583298.7731
90	1	1704964.9032	583293.3315
91	1	1705024.4595	583283.2192
92	1	1705027.2726	583279.6986
93	1	1705025.1767	583268.3897
94	1	1705037.0074	583266.3809
95	1	1705040.9471	583288.5493
96	1	1704905.6089	583306.2793
97	1	1704877.6595	583311.0249
98	1	1704873.5206	583293.6330
99	1	1704856.8291	583290.9270
100	1	1704859.2507	583305.1890
101	1	1704857.2106	583282.0578
102	1	1704839.4273	583283.8914
103	1	1704834.6817	583255.9420
104	1	1704836.7176	583239.0232
105	1	1704834.0687	583235.3701
106	1	1704848.7584	583232.2784
107	1	1704844.0586	583204.5987

Point Table			
Point #	Raw Description	Easting	Northing
108	1	1704880.0403	583267.1682
109	1	1704865.7481	583200.9160
110	1	1704825.9891	583205.7069
111	1	1704815.3016	583178.6057
112	1	1704806.2512	583172.0304
113	1	1704811.7855	583157.8974
114	1	1704805.0609	583167.1464
115	1	1704789.3123	583174.5201
116	1	1704788.6132	583169.5691
117	1	1704765.3585	583178.0408
118	1	1704763.8069	583172.9620
119	1	1704817.2215	583136.1489
120	1	1704819.6862	583135.7304
121	1	1704801.4483	583097.0165
122	1	1704807.3636	583096.0121
123	1	1704812.6934	583094.5462
124	1	1704821.4888	583075.4080
125	1	1704836.1996	583068.7066
126	1	1704820.8211	583044.6107
127	1	1704824.6608	583049.2212
128	1	1704823.8892	583036.6220
130	1	1704857.5453	583086.8941
131	1	1704881.8849	583048.4515
132	1	1705055.8494	583167.4376
133	1	1705064.7917	583185.3271
134	1	1705081.8498	583243.0453
135	1	1705080.3877	583259.1422
136	1	1705021.9206	583268.2666
137	1	1704950.9797	583280.4809
138	1	1704947.2969	583258.7914
139	1	1704923.3080	583285.1794
140	1	1704834.8582	583014.0210
141	1	1704834.2271	583007.5137
142	1	1704829.2797	583008.2667
143	1	1704767.1520	583017.2171
144	1	1704765.7781	583008.3225
145	1	1704722.0575	583024.5864
146	1	1704720.6274	583014.6889
147	1	1704583.1289	583055.5201
148	1	1704578.9569	583026.8720
149	1	1704769.5788	582470.7447
150	1	1704776.0041	582469.7613
151	1	1704744.7660	583360.5656
152	1	1704843.3550	583343.8258
153	1	1704826.3158	583418.4416
154	1	1704733.4646	583480.4824
155	1	1704733.9830	583483.3778
156	1	1704743.7243	583486.6738
157	1	1704764.4694	583505.5857
158	1	1704785.7233	583565.1268

Point Table			
Point #	Raw Description	Easting	Northing
159	1	1704790.3294	583592.2547
160	1	1704828.6313	583560.9190
161	1	1704880.7237	583527.2239
162	1	1704919.8289	583520.5873
163	1	1704952.3726	583536.8655
164	1	1704814.0267	583621.2629
165	1	1704763.0334	583594.6828
166	1	1704755.0039	583601.1270
167	1	1704757.3543	583614.8844
168	1	1704767.0709	583618.3223
169	1	1704786.3790	583634.6226
170	1	1704800.6684	583632.1964
171	1	1704820.6528	583660.2874
172	1	1704805.8662	583662.8089
173	1	1704778.1207	583683.4075
174	1	1704770.0979	583689.8601
175	1	1704771.8083	583699.8735
176	1	1704846.7694	583685.6647
177	1	1704739.5225	583698.4796
178	1	1704733.4197	583704.9891
179	1	1704724.1083	583706.3164
180	1	1704723.3978	583701.3670
181	1	1704779.1824	583748.2841
182	1	1704755.3759	583756.8334
183	1	1704756.0815	583761.7834
184	1	1704781.1436	583761.6407
185	1	1704790.7564	583765.2451
186	1	1704819.3191	583742.0396
187	1	1704833.2823	583739.6467
188	1	1704835.2947	583751.4988
189	1	1704803.2942	583851.7702
190	1	1704795.1076	583857.9943
191	1	1704795.9837	583863.9933
192	1	1704892.6557	584058.0857
193	1	1704884.8069	584059.8256
194	1	1704972.5379	583880.6666
195	1	1704952.8295	583884.0692
196	1	1704965.3934	584550.9514
197	1	1704991.2893	584556.2454
198	1	1705000.9021	584559.8499
199	1	1704968.7426	584566.9033
200	1	1705024.0033	584524.3668
201	1	1705030.2726	584535.2464
202	1	1705013.7623	584527.2086
203	1	1705016.4747	584521.1070
204	1	1705009.7089	584533.3999
205	1	1705102.5979	583469.2318
206	1	1704856.5265	583510.0367
207	1	1705077.0733	583462.4612
208	1	1705076.3558	583458.2722

Point Table			
Point #	Raw Description	Easting	Northing
209	1	1705121.7398	583491.1318
210	1	1705030.6915	583466.0052
211	1	1705171.6720	583823.3210
212	1	1704813.7554	583771.9601
213	1	1704814.5308	583775.6189
214	1	1704790.3214	583633.9458
215	1	1704857.3499	583941.0963
216	1	1705006.2960	583872.5776
217	1	1705130.1442	583616.2267
218	1	1704871.5646	583515.0853
219	1	1704799.5595	583616.5524
220	1	1704799.1625	583623.1751
222	1	1704842.2355	583193.8618
223	1	1704832.1743	583133.6108
224	1	1704868.2719	583361.2198
225	1	1704627.2448	583039.0235
226	1	1704625.8134	583029.1262
227	1	1704613.7534	583030.9880
228	1	1704615.2036	583040.8563
229	1	1704742.8293	583021.4310
230	1	1704741.4017	583011.5331
231	1	1704802.3975	583002.7489
232	1	1704804.5578	583011.5237
233	1	1704828.2768	583001.8430
234	1	1704832.4808	582996.1262
235	1	1704846.7780	582993.9980
236	1	1704868.5426	583970.1650
237	1	1704877.6288	583999.4050
238	1	1704819.0183	583973.0047
239	1	1704812.4764	583981.9994
240	1	1704817.9746	583961.0049
241	1	1704808.6753	583954.2594
242	1	1704853.3168	583004.6081
243	1	1704834.9910	583036.8688
244	1	1704920.8848	583071.3807
245	1	1704909.2676	583069.3153

TENNESSEE STATE PLANE COORDINATE SYSTEM, ZONE 5301, FIPSZONE 4100; NAD 83 DATUM

LOSE DESIGN SPACES FOR LIFE.

THIS DRAWING AND THE DESIGN SHOWN IS THE PROPERTY OF THE ARCHITECT. REPRODUCTION, COPYING, OR USE OF THIS DRAWING WITHOUT THEIR WRITTEN CONSENT IS PROHIBITED, AND ANY INFRINGEMENT IS SUBJECT TO LEGAL ACTION.

JOSHUA A. GULICK REGISTERED XVI AGRICULTURE COMMERCE TENNESSEE LANDSCAPE ARCHITECT 12.09.2019.

FREEDOM BALL FIELDS

C.O.F. AND F.S.S.D. BALL FIELD CONSTRUCTION

COF PROJECT #7139

CITY OF FRANKLIN

FRANKLIN TENNESSEE

SUBMITTALS / REVISIONS		
NO.	DATE	DESCRIPTION
1	07.24.2020	MATERIALS, GATE SIZE, IRRIGATION

SHEET TITLE

COGO POINTS TABLE

PROJECT NO. 18062-1	DATE 05/08/2020
DRAWN BY ZRK	SCALE AS SHOWN
CHECKED BY JG	
SHEET NO. C1.06	

N:\2018\18062-1P_FSSD_Ball_Field_CDs\CAD\01_SHEETS\18062-1_C1.00_SITE_SERIES.dwg - Printed on 2020-07-23 at 12:50:05 PM.

NOTES:
1. INFIELD MIX TO BE SOUTHERN ATHLETIC 'PREMIERE' MIX WITH SAFECOAT BY STS DISTRIBUTION. CONTACT : RYAN MORIARITY 615.566.9799 (OR APPROVED EQUAL).
2. LASER GRADE & COMPACT TO 95% DRY DENSITY.
3. SUBMIT PRODUCT COLOR AND CUT SHEET FOR APPROVAL PRIOR TO ORDERING.

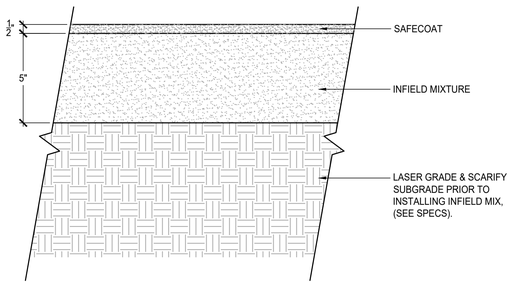

1 SKINNED INFIELD SURFACE
SCALE: NTS

NOTES:
1. DECOMPOSED GRANITE TO BE GRANITE BY KAFKA GRANITE. CONTACT: NAME NUMBER (OR APPROVED EQUAL).
2. CONTRACTOR TO INCORPORATE STABILIZER MIX WITH GRANITE PRIOR TO PLACING SURFACE.
3. SUBMIT PRODUCT COLOR AND CUT SHEET FOR APPROVAL PRIOR TO ORDERING.
4. INSTALL TREES IN PLACE PRIOR TO INSTALLATION OF STABILIZED DECOMPOSED GRANITE.

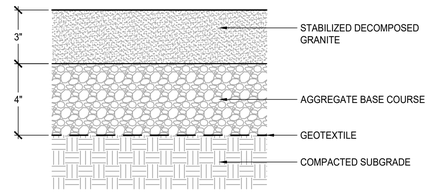

2 DECOMPOSED GRANITE
SCALE: NTS

NOTES:
1. INSTALL TREES PRIOR TO FINAL INSTALLATION OF CRUSHED AGGREGATE.

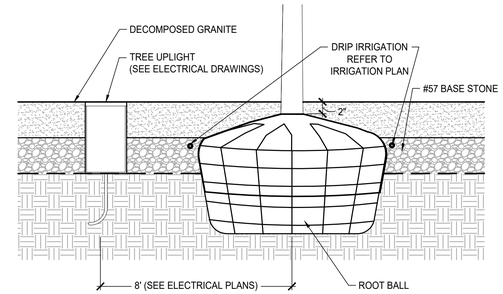

3 TREE AT DECOMPOSED GRANITE
SCALE: NTS

NOTES:
1. WARNING TRACK MIX TO BE SAF-TRAC MIX BY STS DISTRIBUTION. CONTACT : RYAN MORIARITY 615.566.9799 (OR APPROVED EQUAL).
2. CONTRACTOR TO ENSURE POSITIVE DRAINAGE ACROSS FIELD AND FLUSH CURB.
3. SEE INFIELD MIX DETAIL FOR INSTALLATION AT ARTIFICIAL TURF.

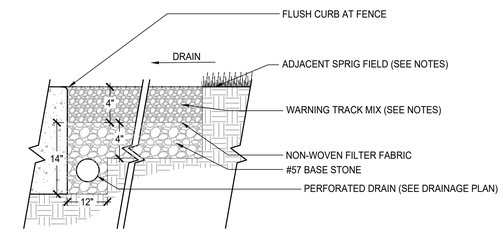

4 WARNING TRACK MIX
SCALE: NTS

NOTES:
1. INFIELD MIX TO BE SOUTHERN ATHLETIC 'PREMIERE' MIX BY STS DISTRIBUTION. CONTACT : RYAN MORIARITY 615.566.9799 (OR APPROVED EQUAL).
2. CONTRACTOR TO ENSURE POSITIVE DRAINAGE ACROSS FIELD AND FLUSH CURB.
3. CONTRACTOR TO HOLD EDGES AS VERTICAL AS PRACTICAL AND HOLD CRISP AND CLEAN TRANSITIONS BETWEEN MATERIALS.

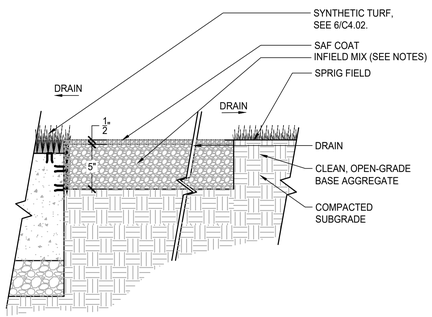

5 INFIELD MIX AT ARTIFICIAL TURF
SCALE: NTS

NOTES:
1. INFIELD SYNTHETIC TURF TO BE SPORTTURF POWERHOUSE 44T (1-3/4") PILE HEIGHT BY STS DISTRIBUTION. CONTACT : RYAN MORIARITY 615.566.9799 (OR APPROVED EQUAL).
2. PILE TO BE 1/2" ABOVE ADJACENT SURFACE.

1

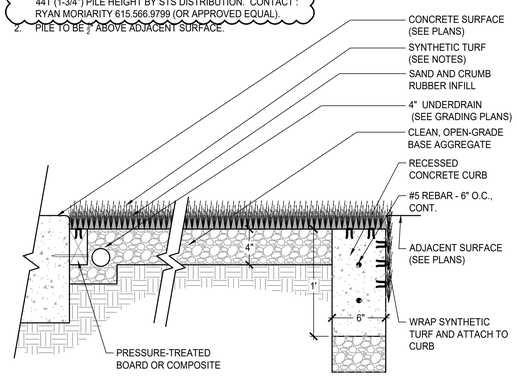

6 TURF SURFACE AT INFIELD HIPS
SCALE: NTS

NOTES:
1. TURF SURFACE TO BE PEDIGREE 'XM' , 1-1/2" BY STS DISTRIBUTION. CONTACT : RYAN MORIARITY 615.566.9799 (OR APPROVED EQUAL).
2. DRAWING PROVIDED AS BASIS OF DESIGN FOR BID PURPOSES ONLY. CONTRACTOR SHALL INSTALL SYSTEM PER MANUFACTURER'S SPECIFICATIONS.

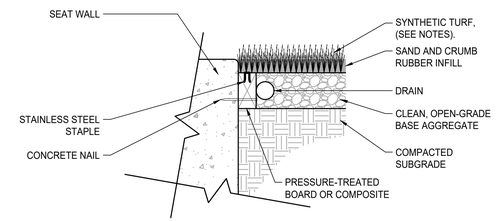

7 TURF SURFACE AT SEAT WALL
SCALE: NTS

NOTES:
1. SYNTHETIC TURF TO BE DURA PLAY 'PREMIER' BY STS DISTRIBUTION. CONTACT : RYAN MORIARITY 615.566.9799 (OR APPROVED EQUAL).
2. INSTALL PER MANUFACTURER RECOMMENDATIONS.
3. PROVIDE IN BASEBALL AND SOFTBALL BULL PENS.

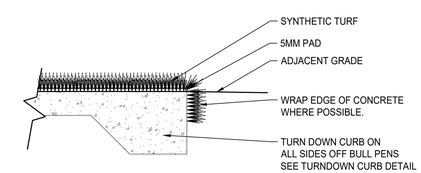

8 TURF AT CONCRETE (BULLPENS AND BATTING CAGES)
SCALE: NTS

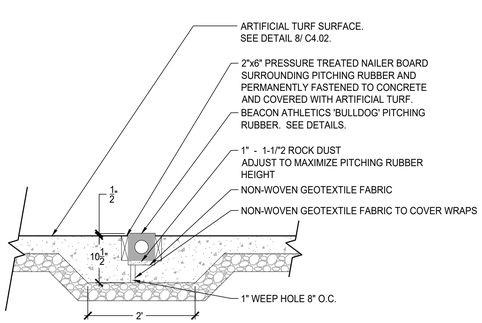

9 PITCHING RUBBER AT CONCRETE (SOFTBALL BULLPEN)
SCALE: NTS

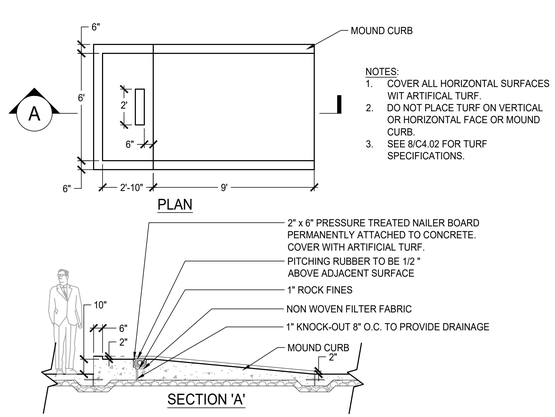

NOTES:
1. COVER ALL HORIZONTAL SURFACES WIT ARTIFICAL TURF.
2. DO NOT PLACE TURF ON VERTICAL OR HORIZONTAL FACE OR MOUND CURB.
3. SEE 8/C4.02 FOR TURF SPECIFICATIONS.

10 PITCHING RUBBER AT CONCRETE (BASEBALL BULLPEN)
SCALE: NTS

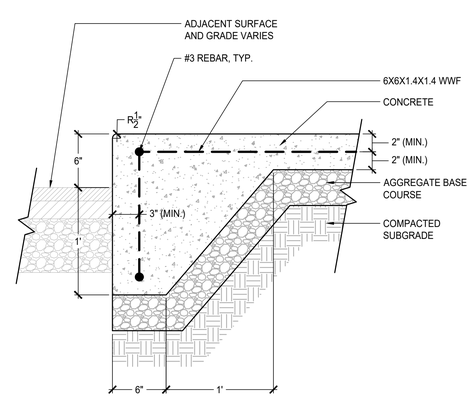

11 CONCRETE CURB (TURNDOWN)
SCALE: NTS

LOSE DESIGN
SPACES FOR LIFE.

THIS DRAWING AND THE DESIGN SHOWN IS THE PROPERTY OF THE ARCHITECT. REPRODUCTION, COPYING, OR USE OF THIS DRAWING WITHOUT THEIR WRITTEN CONSENT IS PROHIBITED, AND ANY INFRINGEMENT IS SUBJECT TO LEGAL ACTION.

JOSHUA A. GULICK REGISTERED AGRICULTURE COMMISSIONER LANDSCAPE ARCHITECT 07/2019.

FREEDOM BALL FIELDS
C.O.F. AND F.S.S.D. BALL FIELD CONSTRUCTION
COF PROJECT #7139
CITY OF FRANKLIN
FRANKLIN TENNESSEE

SUBMITTALS / REVISIONS

NO.	DATE	DESCRIPTION
1	07.24.2020	MATERIALS, GATE SIZES, IRRIGATION

SHEET TITLE
DETAILS

PROJECT NO. 18062-1	DATE 05/08/2020
DRAWN BY ZRK	SCALE AS SHOWN
CHECKED BY JG	
SHEET NO. C4.02	

N:\2018\18062-07_FSSD_Ball_Field_CD\CADD\1_SHEETS\18062-1_C4.00_DETAIL_SERIES.dwg - Printed on 2020-07-23 at 11:15:44 AM

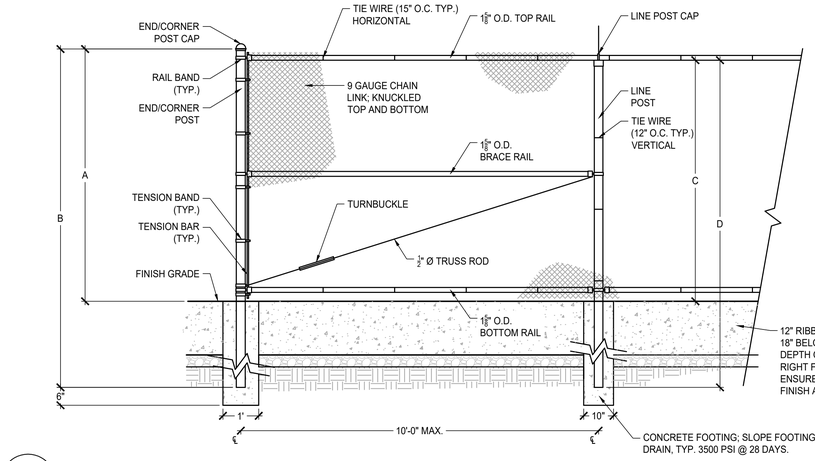

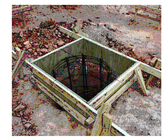

DESIGN INTENT FOR FOOTING AT CURB AND WHERE EXPOSED ADJACENT TO CURB

NOTES:
1. SEE CHAIN LINK FENCE DIMENSION CHART (DETAIL 5 ON THIS SHEET) FOR POST DIMENSIONS.
2. SEE FENCE AND GATE NOTES (DETAIL 6 ON THIS SHEET) FOR ADDITIONAL FENCE CLARIFICATION.

12" RIBBON CURB BETWEEN POSTS AT FENCE PERIMETER. ENSURE 18" BELOW GRADE MEASURED FROM LOWEST SIDE. COORDINATE DEPTH OF FOOTERS AND RIBBON CURB AT 20' FENCE SECTION AT RIGHT FIELD OF BASEBALL FIELD. SEE SHEET C4.14 FOR DETAIL. ENSURE EXPOSED FOOTER AND WALL HAVE LIGHT SAND BLAST FINISH AND ARE FREE OF BUG HOLES AND BLEMISHES.

1 CHAIN LINK FENCE
SCALE: NTS

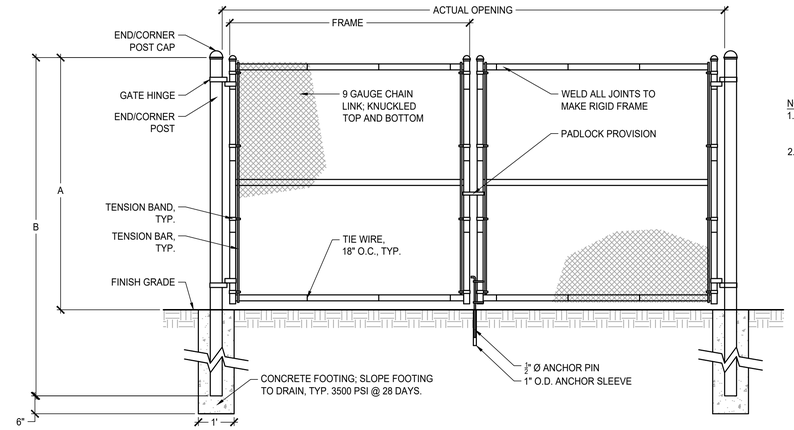

NOTES:
1. SEE CHAIN LINK GATE DIMENSION CHART (DETAIL 7 ON THIS SHEET) FOR POST DIMENSIONS.
2. SEE FENCE AND GATE NOTES (DETAIL 6 ON THIS SHEET) FOR ADDITIONAL FENCE CLARIFICATION.

2 CHAIN LINK GATE (DOUBLE-SWING)
SCALE: NTS

NOTES:
1. SEE CHAIN LINK GATE DIMENSION CHART (THIS SHEET) FOR POST DIMENSIONS.
2. SEE FENCE AND GATE NOTES (THIS SHEET) FOR ADDITIONAL FENCE CLARIFICATION.

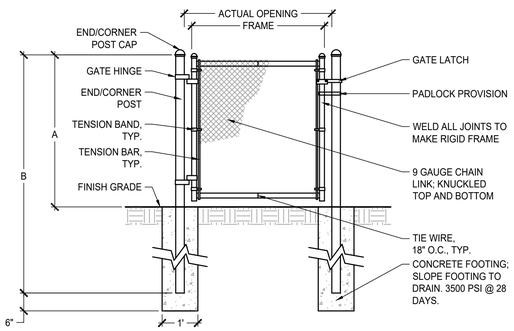

3 CHAIN LINK GATE (SINGLE-SWING)
SCALE: NTS

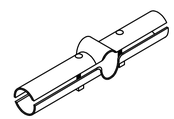

NO. 2251	1-5/8"	X	1-5/8"
NO. 2186	2"	X	1-5/8"
NO. 2188	2-3/8"	X	1-5/8"
NO. 2189	3"	X	1-5/8"

BRACE & END RAIL

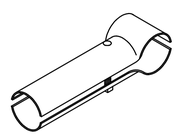

NO. 2177	1-5/8"	X	1-5/8"
NO. 2179	2"	X	1-5/8"
NO. 2180	2-3/8"	X	1-5/8"
NO. 2181	2-3/8"	X	1-5/8"
NO. 2182	3"	X	1-5/8"

LINE RAIL AT CROSSING

4 CHAIN LINK FRAME CLAMPS
SCALE: NTS

CHAIN LINK FENCE DIMENSION CHART						
	CORNER & END POST			LINE POST		
FENCE HEIGHT	A	B	O.D.	C	D	O.D.
3'-3"	3'-6"	6'-0"	2 1/2"	3'-3 3/8"	5'6"	2 1/8"
3'-6"	3'-9"	6'-2"		3'-5 3/8"	5'-6"	
4'-0"	4'-3"	6'-8"		3'-1 3/8"	6'-6"	
5'-0"	5'-3"	7'-8"		4'-1 3/8"	7'-6"	
6'-0"	6'-0 3/8"	9'-1"		5'-8 3/8"	8'-8"	
7'-0"	7'-0 3/8"	10'-1"	3"	6'-8 3/8"	9'-8"	2 1/8"
8'-0"	8'-0 3/8"	11'-1"		7'-8 3/8"	10'-8"	
9'-0"	9'-0 3/8"	12'-1"		8'-8 3/8"	11'-8"	
10'-0"	10'-0 3/8"	13'-1"		9'-8 3/8"	12'-8"	
12'-0"	12'-0 3/8"	15'-1"		11'-8 3/8"	14'-8"	

5 CHAIN LINK FENCE DIMENSION CHART
SCALE: NTS

NOTES:
1. ALL POST AND RAILS SHALL BE LOCATED OUTSIDE THE PLAYING FIELDS WITH FABRIC TO THE INSIDE.
2. ALL TIE WIRES SHALL BE TWISTED AWAY FROM AND LOCATED OUTSIDE THE PLAYING FIELDS.
3. ALL TERMINAL AND LINE POST 20'-0" OR TALLER (AT RIGHT FIELD ON BASEBALL FIELD, SEE LAYOUT PLAN) SHALL BE 4" DIA. SCH. 40 STEEL UNLESS OTHERWISE NOTED.
4. ***NETTING SUPPORT POSTS TO BE PROVIDED BY SPORTSFIELD SPECIALTIES. COORDINATE CONNECTION OF CHAIN LINK FENCING, GATES, FABRIC, HARDWARE, FOOTINGS ETC. WITH INSTALLATION OF NETTING SUPPORT POSTS.
5. ALL RAILS SHALL BE 1-5/8"X1/4" ROLL FORMED STEEL OR EQUAL C TYPE RAIL POST.
6. ALL POSTS SHALL BE EQUIPPED WITH EITHER LINE POST CAPS OR STANDARD CAPS TO KEEP MOISTURE OUT OF POST.
7. ALL FENCING SHALL BE KNUCKLED TOP AND BOTTOM.
8. SEE FENCING CHARTS FOR CORNER POST AND LINE POST REQUIREMENTS.
9. ALL GATE AND FENCING STRUCTURE/ FABRIC SHALL BE 9 GUAGE POWDER COATED PIPE (CLASS 2B THERMALLY FUSED AND BONDED); COLOR TO BE BLACK.
10. TIE WIRES SHALL BE 13 GAUGE AND MATCH FENCE FABRIC COATING.
11. MID-RAIL ONLY REQUIRED ON FENCING OVER 6'-0".
12. CHAINLINK FABRIC TO BE 9 GAUGE UNLESS OTHER WISE NOTED ON PLANS.

6 CHAIN LINK NOTES
SCALE: NTS

CHAIN LINK GATE DIMENSION CHART - SINGLE GATE							
NORMAL OPENING	SQ. HINGE & LATCH POST	ACTUAL OPENING (E)	HINGE SETTING	RD. HINGE & LATCH POST	ACTUAL OPENING	HINGE SETTING	FRAME (F)
3'-0"	2 1/8" O.D. OR 3" O.D.	3'-1"	2"	2 1/8" O.D.	3'-1 1/2"	2 1/4"	2'-8 1/2"
3'-6"		3'-7"			3'-7 1/2"		3'-2 1/2"
4'-0"		4'-1"			4'-1 1/2"		3'-8 1/2"
5'-0"		5'-1"			5'-1 1/2"		4'-8 1/2"
6'-0"		6'-1"			6'-1 1/2"		5'-8 1/2"
7'-0"	3" O.D.	7'-1"		4" O.D.	7'-1 1/2"		6'-8 1/2"
8'-0"		8'-1"			8'-1 1/2"		7'-8 1/2"
9'-0"		9'-1"			9'-1 1/2"		8'-8 1/2"
10'-0"		10'-1"			10'-1 1/2"		9'-8 1/2"
"	– – –	– – –	– – –	6 5/8" O.D.	10'-2 1/2"	3 1/2"	9'-8 1/2"
11'-0"	– – –	– – –	– – –	4" O.D.	11'-1 1/2"	2 1/4"	10'-8 1/2"
"	– – –	– – –	– – –	6 5/8" O.D.	11'-2 1/2"	3 1/2"	10'-8 1/2"
12'-0"	– – –	– – –	– – –	4" O.D.	12'-1 1/2"	2 1/4"	11'-8 1/2"
"	– – –	– – –	– – –	6 5/8" O.D.	12'-2 1/2"	3 1/2"	11'-8 1/2"
13'-0"	– – –	– – –	– – –		13'-1 1/2"		12'-7 1/2"

CHAIN LINK GATE DIMENSION CHART - DOUBLE GATE							
NORMAL OPENING	SQ. HINGE & LATCH POST	ACTUAL OPENING (E)	HINGE SETTING	RD. HINGE & LATCH POST	ACTUAL OPENING	HINGE SETTING	FRAME (F)
6'-0"	2 1/8" O.D. OR 3" O.D.	6'-0"	2"	2 1/8" O.D.	6'-1/2"	2 1/4"	2'-8 1/2"
7'-0"		7'-0"			7'-1/2"		3'-2 1/2"
8'-0"		8'-0"			8'-1/2"		3'-8 1/2"
10'-0"		10'-0"			10'-1/2"		4'-8 1/2"
12'-0"		12'-0"			12'-1/2"		5'-8 1/2"
14'-0"	3" O.D.	14'-0"		4" O.D.	14'-1/2"		6'-8 1/2"
16'-0"		16'-0"			16'-1/2"		7'-8 1/2"
18'-0"		18'-0"			18'-1/2"		8'-8 1/2"
20'-0"		20'-0"			20'-1/2"		9'-8 1/2"
"	– – –	– – –	– – –	6 5/8" O.D.	20'-2 1/2"	3 1/2"	9'-8 1/2"
22'-0"	– – –	– – –	– – –	4" O.D.	22'-1/2"	2 1/4"	10'-8 1/2"
"	– – –	– – –	– – –	6 5/8" O.D.	22'-2 1/2"	3 1/2"	10'-8 1/2"
24'-0"	– – –	– – –	– – –	4" O.D.	24'-1/2"	2 1/4"	11'-8 1/2"
"	– – –	– – –	– – –	6 5/8" O.D.	24'-2 1/2"	3 1/2"	11'-8 1/2"
26'-0"	– – –	– – –	– – –		26'-1/2"		12'-7 1/2"

7 CHAINLINK GATE DIMENSION CHARTS
SCALE: NTS

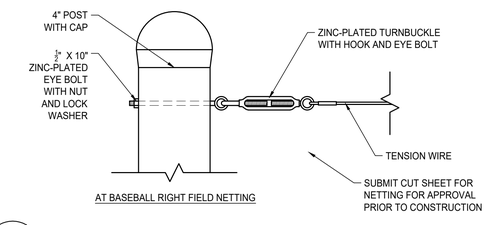

AT BASEBALL RIGHT FIELD NETTING

8 GUY WIRE ATTACHMENT
SCALE: NTS

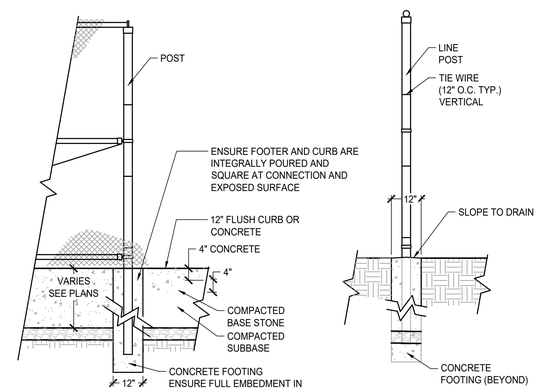

ELEVATION SECTION

9 CHAIN LINK FENCE POST AT RIBBON CURB
SCALE: NTS

LOSE DESIGN
SPACES FOR LIFE.

THIS DRAWING AND THE DESIGN SHOWN IS THE PROPERTY OF THE ARCHITECT. REPRODUCTION, COPYING, OR USE OF THIS DRAWING WITHOUT THEIR WRITTEN CONSENT IS PROHIBITED, AND ANY INFRINGEMENT IS SUBJECT TO LEGAL ACTION.

FREEDOM BALL FIELDS
C.O.F. AND F.S.S.D. BALL FIELD CONSTRUCTION
COF PROJECT #7139
CITY OF FRANKLIN
FRANKLIN TENNESSEE

SUBMITTALS / REVISIONS

NO.	DATE	DESCRIPTION
1	07.24.2020	MATERIALS, GATE SIZE, IRRIGATION

SHEET TITLE
DETAILS

PROJECT NO. 18062-1	DATE 05/08/2020
DRAWN BY ZRK	SCALE AS SHOWN
CHECKED BY JG	
SHEET NO. C4.05	

N:\2018\18062-FF_FSSD_Ball Field_CON\CAD\01_SHEETS\18062-1_C4.05_DETAIL_SERIES.dwg - Printed on 2020-07-23 at 11:56:27 AM

MANUFACTURER: BEACON ATHLETICS (OR APPROVED EQUAL)
MODEL: 6'x12' PRO-MODEL HITTING MAT WITH FLOCKED HOME PLATE
QUANTITY: 9
COLOR : GREEN / WHITE
CONTACT: 800.747.5985, BEACONATHLETICS.COM

1 HITING MAT WITH FLOCKED HOME PLATE
SCALE: NTS

MANUFACTURER: BEACON ATHLETICS (OR APPROVED EQUAL)
MODEL: 10" PORTABLE GAME MOUND
QUANTITY: 1
COLOR : GREEN / WHITE
CONTACT: 800.747.5985, BEACONATHLETICS.COM

2 10 INCH PORTABLE GAME MOUND
SCALE: NTS

MANUFACTURER: BEACON ATHLETICS (OR APPROVED EQUAL)
MODEL: 6" PORTABLE GAME MOUND
QUANTITY: 1
COLOR : GREEN / WHITE
CONTACT: 800.747.5985, BEACONATHLETICS.COM

3 6 INCH PORTABLE GAME MOUND
SCALE: NTS

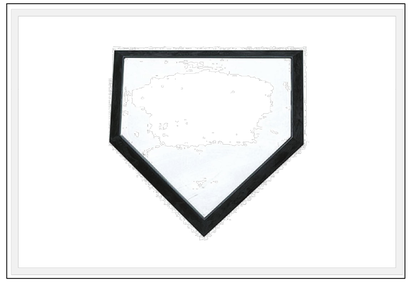

MANUFACTURER: BEACON ATHLETICS (OR APPROVED EQUAL)
MODEL: SHUTT BURRY-ALL HOME PLATE
QUANTITY: 6
COLOR : WHITE
CONTACT: 800.747.5985, BEACONATHLETICS.COM

* INSTALL PER MANUFACTURERS RECOMMENDATION. INLAY INTO ARTIFICIAL TURF AT BULL PENS.

4 HOME PLATE
SCALE: NTS

MANUFACTURER: BEACON ATHLETICS (OR APPROVED EQUAL)
MODEL: BULLDOG PITCHING RUBBER
QUANTITY: 6
COLOR : WHITE
CONTACT: 800.747.5985, BEACONATHLETICS.COM

5 PITCHING MOUND
SCALE: NTS

MANUFACTURER: BEACON ATHLETICS (OR APPROVED EQUAL)
MODEL: 6' TURF ON DECK / FUNGO CIRCLES
QUANTITY: 5
COLOR : GREEN
CONTACT: 800.747.5985, BEACONATHLETICS.COM

6 6 FT ON DECK CIRCLE
SCALE: NTS

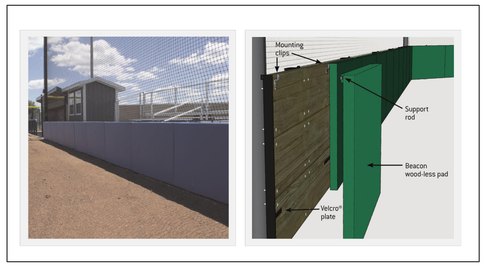

NOTES:
1. FOR USE AT BACKSTOP WALL BETWEEN DUGOUTS ONLY
2. SUBMIT SHOP DRAWINGS FOR REVIEW PRIOR TO APPROVAL

MANUFACTURER: BEACON ATHLETICS (OR APPROVED EQUAL)
MODEL: WOOD-LESS BACKSTOP PADS
QUANTITY: PER SHOP DRAWINGS
COLOR : SELECTED BY OWNER
CONTACT: 800.747.5985, BEACONATHLETICS.COM

7 BACKSTOP PADS
SCALE: NTS

PREMIUM FENCE GUARD
125-515-269

FEATURES:
- Heavy-duty, UV-resistant polyethylene
- Twelve 7' L sections (84') and 50 8" zip ties per carton.
- Carton quantities only
- Color options: red, yellow, green and blue
- Ships via truck

MANUFACTURER: BEACON ATHLETICS (OR APPROVED EQUAL)
MODEL: PREMIUM FENCE GUARD
QUANTITY: CONTRACTOR TO VERIFY PRIOR TO ORDER
COLOR : SELECTED BY OWNER
CONTACT: 800.747.5985, BEACONATHLETICS.COM

NOTES:
1. TO BE PROVIDED FROM END OF BULL PEN TO END OF BULL PEN OF BASEBALL AND SOFTBALL FIELDS.
2. CONFIRM WITH OWNER FOR EXTENTS PRIOR TO ORDERING.
3. CONFIRM COLOR WITH OWNER PRIOR TO ORDERING.

8 PREMIUM FENCE GUARD
SCALE: NTS

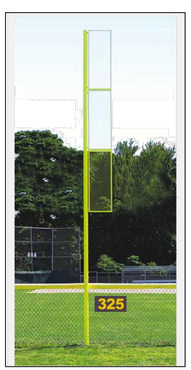

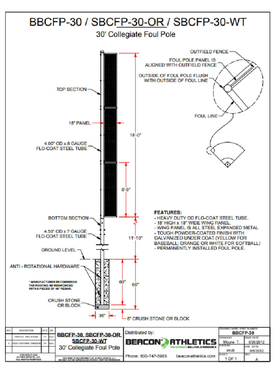

MANUFACTURER: BEACON ATHLETICS (OR APPROVED EQUAL)
MODEL: COLLEGIATE FOUL POLE - 30' HT
QUANTITY: 4
COLOR : YELLOW
CONTACT: 800.747.5985, BEACONATHLETICS.COM

*INSTALL PER MANUFACTURERS RECOMMENDATION

9 FOUL POLE
SCALE: NTS

MANUFACTURER: BEACON ATHLETICS (OR APPROVED EQUAL)
MODEL: STANDARD 24" OUTFIELD DISTANCE MARKER
QUANTITY: 6 (3 PER FIELD) VERIFY DISTANCE AT LEFT, CENTER AND RIGHT FOR EACH FIELD PRIOR TO ORDERING
COLOR : TO BE DETERMINED
CONTACT: 800.747.5985, BEACONATHLETICS.COM

10 OUTFIELD DISTANCE MARKER
SCALE: NTS

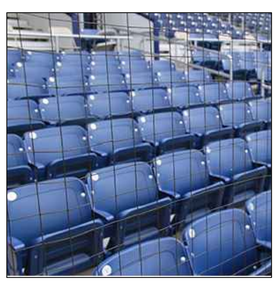

MANUFACTURER: SPORTSIELD SPECIALTIES (OR APPROVED EQUAL)
MODEL:
QUANTITY: CONTRACTOR TO VERIFY PRIOR TO ORDER

CONTACT: 800.975.33435985, SPORTSFIELDSPECIALTIES.COM

11 NETTING AT BASEBALL RIGHT FIELD
SCALE: NTS

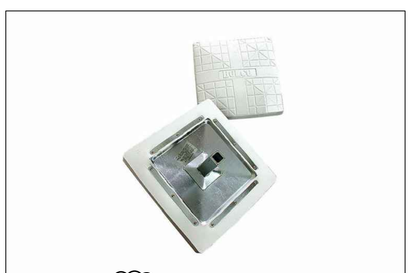

MANUFACTURER: BEACON ATHLETICS (OR APPROVED EQUAL)
MODEL: SHUTT PRO-STYLE BASE SET
QUANTITY: 1 2
COLOR : WHITE
CONTACT: 800.747.5985, BEACONATHLETICS.COM

12 PRO-STYLE BASE SET
SCALE: NTS

LOSE DESIGN
SPACES FOR LIFE.

THIS DRAWING AND THE DESIGN SHOWN IS THE PROPERTY OF THE ARCHITECT. REPRODUCTION, COPYING, OR USE OF THIS DRAWING WITHOUT THEIR WRITTEN CONSENT IS PROHIBITED, AND ANY INFRINGEMENT IS SUBJECT TO LEGAL ACTION.

JOSHUA A. GULCK REGISTERED AGRICULTURE CONSULTANT LANDSCAPE ARCHITECT 12.09.2019.

FREEDOM BALL FIELDS
C.O.F. AND F.S.S.D. BALL FIELD CONSTRUCTION
COF PROJECT #7139
CITY OF FRANKLIN
FRANKLIN TENNESSEE

SUBMITTALS / REVISIONS

NO.	DATE	DESCRIPTION
1	07.24.2020	MATERIALS, GATE SIZE, IRRIGATION

SHEET TITLE
DETAILS

PROJECT NO. 18062-1	DATE 05/08/2020
DRAWN BY ZRK	SCALE AS SHOWN
CHECKED BY JG	
SHEET NO. C4.10	

N:\2018\18062-01_FSSD_Ball_Field_COF\CADD\1_SHEETS\18062-1_C4.00_DETAIL_SERIES.dwg - Printed on 2020-07-23 at 12:01:44 PM

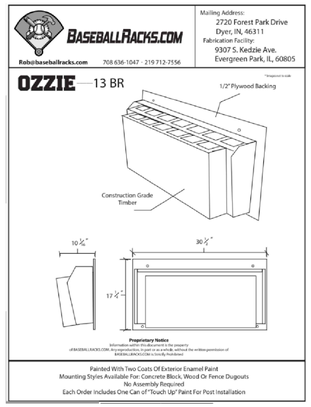

MANUFACTURER: BASEBALLRACKS.COM (OR APPROVED EQUAL)
MODEL: OZZIE- 13 BR
QUANTITY: 4
COLOR : SELECTED BY OWNER
CONTACT: 708.636.1047, BASEBALLRACKS.COM

1 BAT HOLDER
SCALE: NTS

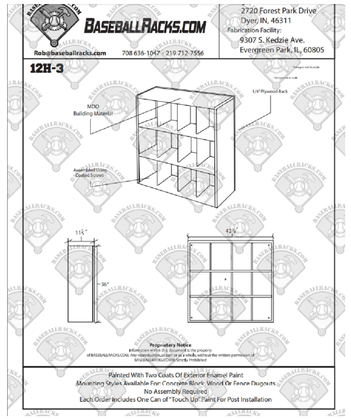

MANUFACTURER: BASEBALLRACKS.COM (OR APPROVED EQUAL)
MODEL: 12H-3
QUANTITY: 4
COLOR : SELECTED BY OWNER
CONTACT: 708.636.1047, BASEBALLRACKS.COM

2 HELMET RACK
SCALE: NTS

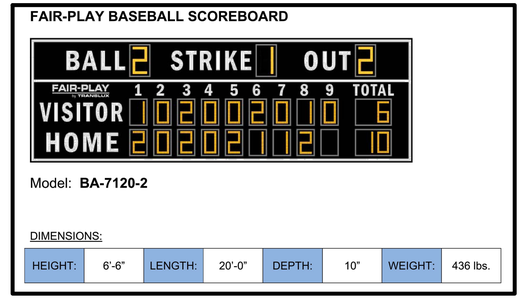

Model: **BA-7120-2**

DIMENSIONS:

HEIGHT:	6'-6"	LENGTH:	20'-0"	DEPTH:	10"	WEIGHT:	436 lbs.

MANUFACTURER: FAIR-PLAY (OR APPROVED EQUAL)
MODEL: BA-7120-2 WIRELESS LED BASEBALL SCOREBOARD W/MP-80 CONTROL PANELS AND CARRYING CASE
QUANTITY: 2
COLOR : SELECTED BY OWNER
CONTACT: 8800.247.0265, FAIR-PLAY.COM

3 SCOREBOARD
SCALE: NTS

MANUFACTURER: KEYSTONE RIDGE (OR APPROVED EQUAL)
MODEL: PN6-22; PENN ROUND OR SQUARE TABLE SET WITH BACK
QUANTITY: CONTRACTOR TO VERIFY PRIOR TO ORDER
COLOR : BLACK
CONTACT: 800.284.8208 KEYSTONERIDGEDESIGNS.COM

4 TABLE AND CHAIRS
SCALE: NTS

MANUFACTURER: OUTDOOR ALUMINUM (OR APPROVED EQUAL)
MODEL: SKU TDLW - 5 ROWS - 21' LONG
QUANTITY: 4
COLOR : TO BE SELECTED BY OWNER
CONTACT: OUTDOORALUMINUM.COM

5 BLEACHERS
SCALE: NTS

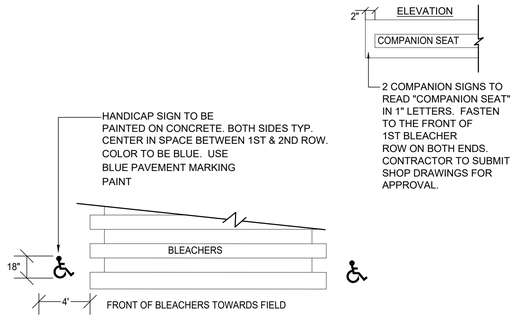

SOUTHEASTERN SEATING (800-248-2099), 21'-5 ROW OR APPROVED EQUAL. ASSEMBLE & INSTALL ALL PARTS PER MANUFACTURER'S SPECIFICATIONS. INSTALL HANDICAPPED STRIPING & LETTERING PER DETAIL XX THIS SHEET.

6 BLEACHER ACCESSIBILITY STANDARDS
SCALE: NTS

MANUFACTURER: KEYSTONE RIDGE (OR APPROVED EQUAL)
MODEL: PN3-32; PENN LITTER RECEPTACLE 32 GAL
QUANTITY: CONTRACTOR TO VERIFY PRIOR TO ORDER
COLOR : SELECTED BY OWNER
CONTACT: 800.284.8208 KEYSTONERIDGEDESIGNS.COM

7 WASTE RECEPTACLE
SCALE: NTS

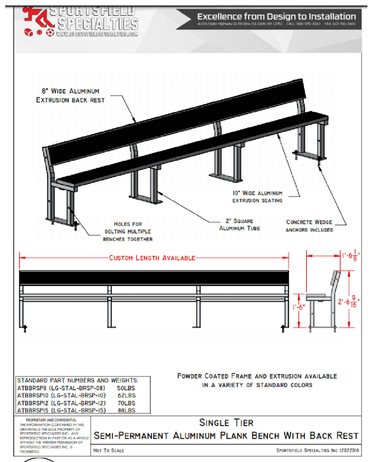

MANUFACTURER: SPORTSIELD SPECIALTIES (OR APPROVED EQUAL)
MODEL: SINGLE TIER SEMI-PERMANENT ALUMINUM PLANK BENCH WITH BACK REST
QUANTITY: CONTRACTOR TO VERIFY PRIOR TO ORDER
COLOR : SELECTED BY OWNER
CONTACT: 800.975.3343, SPORTSFIELD SPECIALTIES.COM

8 TEAM BENCH
SCALE: NTS

MANUFACTURER: KEYSTONE RIDGE (OR APPROVED EQUAL)
MODEL: PN262; PENN BENCH WITH BACK
QUANTITY: CONTRACTOR TO VERIFY PRIOR TO ORDER
COLOR : SELECTED BY OWNER
CONTACT: 800.284.8208 KEYSTONERIDGEDESIGNS.COM

9 BENCH
SCALE: NTS

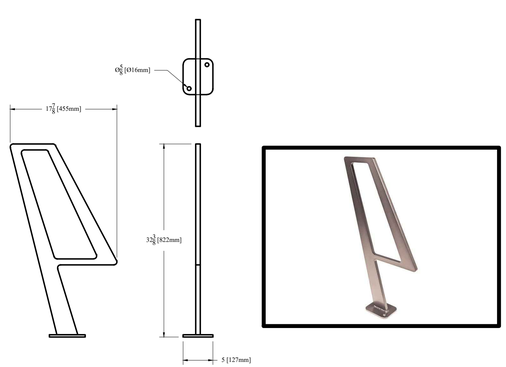

MANUFACTURER: KEYSTONE RIDGE (OR APPROVED EQUAL)
MODEL: CS10; CARSON BIKE RACK
QUANTITY: CONTRACTOR TO VERIFY PRIOR TO ORDER
COLOR : SELECTED BY OWNER
CONTACT: 800.284.8208 KEYSTONERIDGEDESIGNS.COM

10 BIKE RACKS
SCALE: NTS

MANUFACTURER: AERO FLOW
PRODUCT/SIZE: 13' RADIUS PLATE TARP
MODEL: WEIGHTED MOUND TARP (VERIFY MODEL WITH OWNER PRIOR TO ORDERING)
QUANTITY: 2
COLOR : SELECTED BY OWNER
CONTACT: STS DISTRIBUTION. RYAN MORIARITY - 615.566.9799

MANUFACTURER: AERO FLOW
PRODUCT/SIZE: 9' RADIUS MOUND TARP
MODEL: WEIGHTED MOUND TARP (VERIFY MODEL WITH OWNER PRIOR TO ORDERING)
QUANTITY: 2
COLOR : SELECTED BY OWNER
CONTACT: STS DISTRIBUTION. RYAN MORIARITY - 615.566.9799

11 MOUND AND PLATE TARPS
SCALE: NTS

1

LOSE DESIGN
SPACES FOR LIFE.

THIS DRAWING AND THE DESIGN SHOWN IS THE PROPERTY OF THE ARCHITECT. REPRODUCTION, COPYING, OR USE OF THIS DRAWING WITHOUT THEIR WRITTEN CONSENT IS PROHIBITED, AND ANY INFRINGEMENT IS SUBJECT TO LEGAL ACTION.

JOSHUA A. GILLICK
REGISTERED AGRICULTURE & LANDSCAPE ARCHITECT
TENNESSEE
No. 102
Jan 07, 2019.

FREEDOM BALL FIELDS
C.O.F. AND F.S.S.D. BALL FIELD CONSTRUCTION
COF PROJECT #7139

CITY OF FRANKLIN
FRANKLIN
TENNESSEE

SUBMITTALS / REVISIONS

NO.	DATE	DESCRIPTION
1	07.24.2020	MATERIALS, GATE SIZE, IRRIGATION

SHEET TITLE
DETAILS

PROJECT NO.	DATE
18062-1	05/08/2020
DRAWN BY ZRK	SCALE AS SHOWN
CHECKED BY JG	

SHEET NO.
C4.11

N:\2018\18062-F_FSSD_Ball_Field_CDs\CADD\1_SHEETS\18062-1_C4.00_DETAIL_SERIES.dwg - Printed on 2020-07-23 at 12:16:52 PM

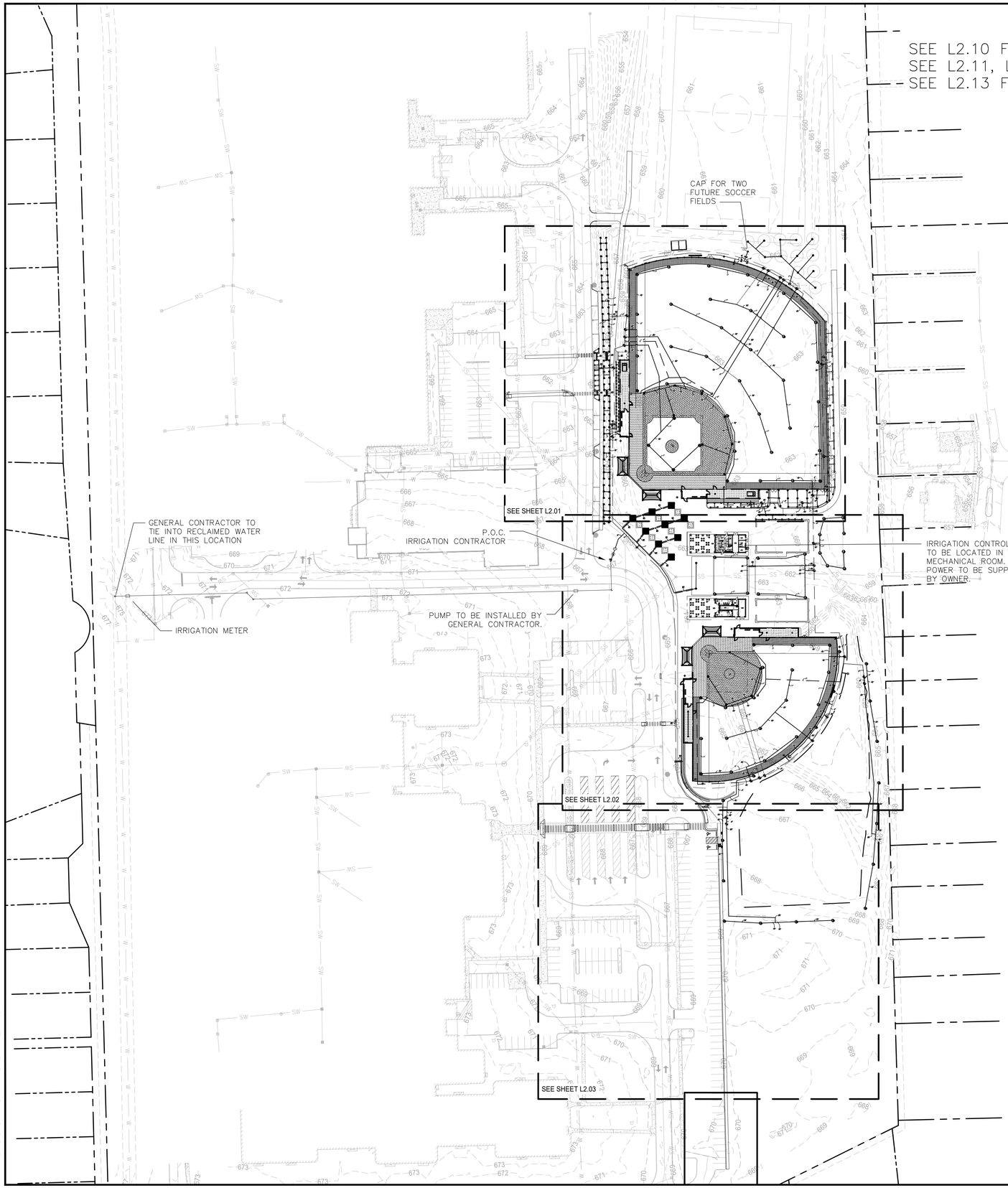

NOTE:
IRRIGATION MAINLINE ROUTING IS DIAGRAMMATIC ONLY. CONTRACTOR TO ROUT ALL MAINLINES AND LATERALS WITHIN PROPERTY BOUNDARIES AND THROUGH SLEEVES AND BEDS.

NOTES:

1. CONTRACTOR TO UTILIZE A AUTOMATIC DRAIN CHECK VALVE DEVICE WHERE LOW HEAD DRAINAGE MAY OCCUR. INSTALL IN VALVE BOX W/ 12" LOOSE GRAVEL FOR DRAINAGE.

2. ALL PIPING AND WIRING UNDER LIGHT DUTY CONCRETE OR ASPHALTIC PAVING WILL BE IN SCH. 40 PVC PIPE SLEEVE OR STRONGER. SLEEVES UNDER HEAVY DUTY CONCRETE OR HEAVY DUTY ASPHALTIC PAVING SHALL BE SCH 80 PVC. SEE PLANS FOR SIZE. SEE DETAIL FOR INSTALLATION REQUIREMENTS.

3. IRRIGATION CONTRACTOR SHALL HEAT BRAND VALVE IDENTIFICATIONS NUMBER ON ALL VALVE BOXES.

IRRIGATION NOTES

1. ALL MAINLINES TO HAVE A MINIMUM OF 18" COVER AS SPECIFIED IN PROJECT MANUAL.
2. ALL LATERAL PIPE TO HAVE A MINIMUM OF 12" COVER.
3. NO ROCKS, BOULDER, OR OTHER EXTRANEOUS MATERIALS TO BE USED IN BACKFILLING OF TRENCH.
4. ALL PIPE TO BE INSTALLED AS PER MANUFACTURERS' SPECIFICATIONS.
5. ALL THREADED JOINTS TO BE COATED WITH TEFLON TAPE OR LIQUID TEFLON.
6. ALL LINES TO BE THOROUGHLY FLUSHED BEFORE INSTALLATION OF SPRINKLER HEADS.
7. SPRINKLER AND RELATED EQUIPMENT TO BE INSTALLED PER MANUFACTURER'S SPECS.
8. ALL ELECTRICAL JOINTS TO BE MADE USING WATERPROOF CONNECTIONS AS SHOWN ON DETAILS.
9. ALL EQUIPMENT NOT SPECIFIED IN THE LEGEND SHALL BE DETERMINED AND FURNISHED BY THE CONTRACTOR.
10. NO ELECTRICAL CONNECTIONS SHALL BE MADE IN THE FIELD EXCEPT AT A VALVE CONTROL BOX OR ANOTHER VALVE BOX SPECIFICALLY FOR CONNECTIONS. USE A DBY OR DBR SPLICE.
11. QUANTITIES SHOWN IN COMPONENTS LIST ARE TO BE VERIFIED BY CONTRACTOR. CONTRACTOR IS RESPONSIBLE FOR HIS OWN QUANTITY TAKEOFFS. ANY DISCREPANCY BETWEEN THIS SHEET AND OTHERS IN THIS SET MUST BE REFERRED TO THE IRRIGATION CONSULTANT BY THE CONTRACTOR FOR CLARIFICATION BEFORE PRECEDING WITH THE WORK.
12. ON TWO WIRE SYSTEMS THE WIRE IS TO BE SPECIAL DIRECT BURIAL IRRIGATION CONTROL CABLE 14 OR 12 AWG WITH OUTER JACKET BEING PRESSURE EXTRUDED HIGH DENSITY PE CONFORMING TO ICEA S-61_402, AND NEMA WC5 JACKET THICKNESS 3/64"MIN. JACKET MATERIAL TO COMPLETELY FILL INTERSTICES BETWEEN THE TWO INSULATED CONDUCTORS.
13. INSTALL A 16 GAUGE TRACER WIRE IN ALL TWO WIRE SYSTEM'S TRENCHES.
14. CONTRACTOR TO BE RESPONSIBLE FOR PROPER COVERAGE OF AREAS TO BE WATERED. I.E. ADJUST HEADS WITH INSUFFICIENT COVERAGE DUE TO BLOCKAGE BY EXISTING OR PROPOSED SITE FEATURES.
15. CONTRACTOR TO REFER TO LANDSCAPE PLAN TO KEEP SPRINKLER EQUIPMENT AND ACCESSORY MATERIAL FROM INTERFERING WITH PROPER PLANTING, i.e. VERIFY ROOT BALL SIZE FOR PLANTING.
16. CONTRACTOR SHALL PROVIDE EXPANSION COILS AT EACH WIRE CONNECTION IN VALVE BOX. LEAVE TWENTY-FOUR (24) INCH LOOP OF WIRE AT EACH VALVE.
17. CONTRACTOR TO UTILIZE INSTALLATION MANUAL DRAIN VALVES ALONG MAIN AND LATERAL LINES AND LOW POINTS
18. ALL SPRINKLERS TO BE MOUNTED ON SWING JOINTS – REFER TO DETAILS.
19. CONTRACTOR SHALL INSTALL A SEPARATE COMMON FOR EACH CONTROLLER.
20. 24 VOLT WIRE SHALL BE COLOR CODED; COMMON-WHITE, CONTROL-RED.
21. CONTRACTOR SHALL INSTALL MANUFACTURERS' RECOMMENDED GROUNDING EQUIPMENT FOR POWER SUPPLY AND VALVE OUTPUT WITH (2) 5/8" COPPER CLAD GROUND RODS.
22. CONTRACTOR SHALL INSTALL GROUND AND LIGHTING PROTECTION AS CALLED FOR BY SPECIFICATIONS AND MANUFACTURER.
23. ALL MATERIAL TO BE SUPPLIED BY CONTRACTOR TO OWNER:
    A. TWO WRENCHES FOR DISASSEMBLING AND ADJUSTING EACH TYPE OF SPRINKLER HEADS AND VALVE SUPPLIED.
    B. FOUR KEYS FOR EACH OF THE AUTOMATIC CONTROLLERS.
    C. TWO QUICK COUPLER KEYS WITH MATCHING HOSE SWIVELS.
24. SYSTEM IS DIAGRAMMATIC TO IMPROVE CLARITY. ALL MAINLINE PIPING ELECTRIC VALVES AND WIRING ARE TO BE INSTALLED IN LANDSCAPE AREAS AND WITHIN PROPERTY BOUNDARIES. CONTRACTOR SHALL REFERENCE THE LANDSCAPE PLAN PRIOR TO THE INSTALLATION OF PIPING TO AVOID CONTACT WITH PLANT MATERIALS EXISTING OR NEW.
25. CONTRACTOR TO ADD EXTENSION RISER TO POP-UP HEADS WHEN NEEDED FOR PROPER COVERAGE.
26. CONTRACTOR SHALL INSTALL ALL SPRINKLERS 4" FROM CURBS OR WALKS.
27. IRRIGATION CONTRACTOR RESPONSIBLE FOR IRRIGATION MAINLINE FROM POINT OF CONNECTION TO ALL VALVES.
28. ALL FITTINGS FOR MAINLINE PIPES 4" AND LARGER WILL BE HARCO DUCTILE IRON GASKETED FITTINGS OR APPROVED EQUAL FOR USE WITH PVC.
29. PLACE TRACE WIRES ON ALL MAIN TRENCHES NOT RECEIVING CONTROL WIRES.
30. SYSTEM IS DESIGNED TO OPERATE AT 210 GPM AT 80 PSI.
31. EXISTING RECLAIMED WATER PRESSURE IS SAID TO FLUCTUATE BETWEEN 20-70 PSI AT STREET.

GENERAL IRRIGATION NOTES:

1. UNDERGROUND UTILITIES;
   A. UNDERGROUND UTILITIES HAVE NOT BEEN VERIFIED BY THE OWNER, LANDSCAPE ARCHITECT, OR THEIR REPRESENTATIVES. BEFORE YOU DIG CALL 811.
   B. THE CONTRACTOR SHALL DETERMINE THE EXACT LOCATION OF ALL EXISTING UTILITIES BEFORE COMMENCING WORK AND AGREES TO BE RESPONSIBLE FOR ANY AND ALL DAMAGES WHICH MIGHT RESULT FROM THE CONTRACTOR'S FAILURE TO EXACTLY LOCATE AND PRESERVE ANY UNDERGROUND UTILITIES TO REMAIN.

2. THE CONTRACTOR SHALL VERIFY EXISTING CONDITIONS TO INSURE THAT THE NEW WORK SHALL FIT INTO THE EXISTING SITE IN THE MANNER INTENDED AND AS SHOWN ON THE DRAWINGS. SHOULD ANY CONDITIONS EXIST THAT ARE CONTRARY TO THOSE ON THE DRAWINGS, THE CONTRACTOR SHALL NOTIFY THE OWNER'S REPRESENTATIVE PRIOR TO PERFORMING ANY WORK IN THE AREA INVOLVING DIFFERENCES. NOTIFICATION SHALL BE MADE IN THE FORM OF A DRAWING OR SKETCH INDICATING FIELD MEASUREMENTS AND NOTES RELATING TO THE AREA.

3. THE IRRIGATION CONTRACTOR IS RESPONSIBLE FOR PROCURING ALL NECESSARY PERMITS TO COMPLETE INSTALLATION OF THE IRRIGATION SYSTEM.

4. ALL WORK IS TO MEET ALL STATE AND LOCAL CODES.

5. CONTRACTOR IS TO VERIFY ALL QUANTITIES SHOWN ON PLAN AND IN LIST. IF DISCREPANCIES OCCUR, CONTRACTOR IS TO CONTACT LANDSCAPE ARCHITECT IMMEDIATELY. QUANTITIES SHOWN ON PLAN TAKE PRECEDENCE.

6. THE IRRIGATION CONTRACTOR WILL BE HELD FINANCIALLY LIABLE FOR ANY DAMAGE CAUSED TO NEWLY POURED CONCRETE DRIVES, CURBING, OR SIDEWALKS BY THE INSTALLATION OF THE IRRIGATION SYSTEM.

0 80 160 240
SCALE: 1" = 80 '

TENNESSEE STATE PLANE COORDINATE SYSTEM, ZONE 5301, FIPSZONE 4100; NAD 83 DATUM

LOSE DESIGN
SPACES FOR LIFE.

THIS DRAWING AND THE DESIGN SHOWN IS THE PROPERTY OF THE ARCHITECT. REPRODUCTION, COPYING, OR USE OF THIS DRAWING WITHOUT THEIR WRITTEN CONSENT IS PROHIBITED, AND ANY INFRINGEMENT IS SUBJECT TO LEGAL ACTION.

JOSHUA A. GILLICK
REGISTERED
TN
AGRICULTURE
COMMERCE
LANDSCAPE ARCHITECT
12.09.2019.

FREEDOM BALL FIELDS
C.O.F. AND F.S.S.D. BALL FIELD CONSTRUCTION
COF PROJECT #7139

CITY OF FRANKLIN
FRANKLIN
TENNESSEE

SUBMITTALS / REVISIONS

NO.	DATE	DESCRIPTION
1	07.24.2020	MATERIALS, GATE SIZE, IRRIGATION

SHEET TITLE
IRRIGATION PLAN

PROJECT NO. 18062-1	DATE 05/08/2020
DRAWN BY JS	SCALE AS SHOWN
CHECKED BY JS	
SHEET NO. L2.00	1

N:\2018\18062-P_FSSD_Ball_Field_CONCAD\01_SHEETS\18062-L2.00_IRRIGATION_SERIES.dwg - Printed on 2020-07-24 at 10:10:20 AM.

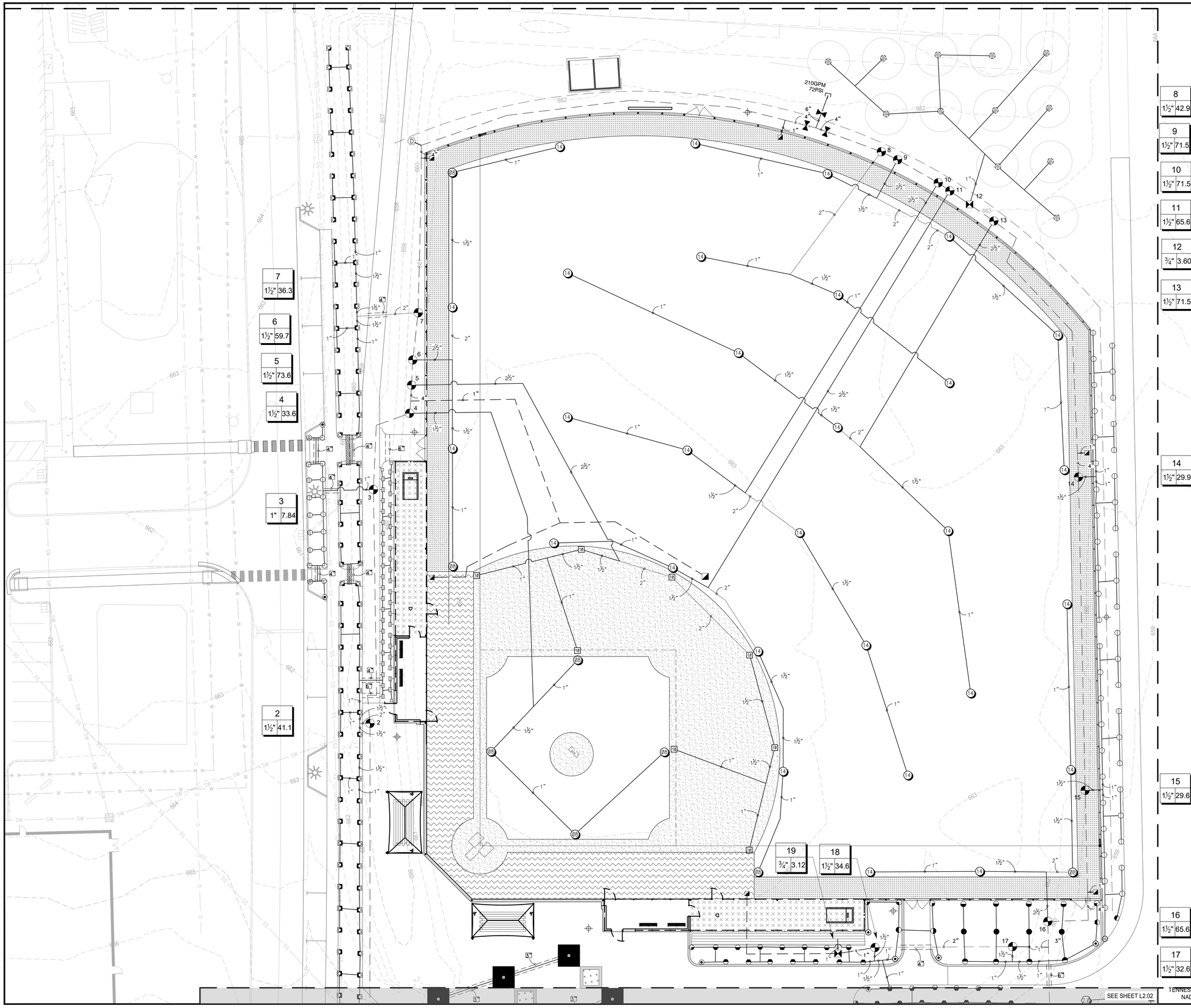

EFFLUENT WATER
WHEN A SITE IS USING NON–POTABLE OR EFFLUENT WATER AS IRRIGATION WATER, THE IRRIGATION SYSTEM SHALL BE INSTALLED USING THE INDUSTRY STANDARD PURPLE COLOR INDICATORS MARKED ON ALL PIPES, CONTROL VALVES, QUICK COUPLERS AND SPRINKLER HEADS TO PREVENT ACCIDENTAL DRINKING OF WATER.

0 20 40 60

SCALE: 1" = 20 '

TENNESSEE STATE PLANE COORDINATE SYSTEM, ZONE 5301, FIPSZONE 4100; NAD 83 DATUM

LOSE DESIGN
SPACES FOR LIFE.

THIS DRAWING AND THE DESIGN SHOWN IS THE PROPERTY OF THE ARCHITECT. REPRODUCTION, COPYING, OR USE OF THIS DRAWING WITHOUT THEIR WRITTEN CONSENT IS PROHIBITED, AND ANY INFRINGEMENT IS SUBJECT TO LEGAL ACTION.

JOSHUA A. GULICK
REGISTERED
TN
AGRICULTURE
LANDSCAPE ARCHITECT
2019.

FREEDOM BALL FIELDS
C.O.F. AND F.S.S.D. BALL FIELD CONSTRUCTION
COF PROJECT #7139

CITY OF FRANKLIN

FRANKLIN TENNESSEE

SUBMITTALS / REVISIONS

NO.	DATE	DESCRIPTION
1	07.24.2020	MATERIALS, GATE SIZE, IRRIGATION

SHEET TITLE

IRRIGATION PLAN

PROJECT NO.	DATE
18062-1	05/08/2020
DRAWN BY JS	SCALE AS SHOWN
CHECKED BY JS	
SHEET NO.	

L2.01 1

N:\2018\18062-P_FSSD_Ball_Field_CDs\CAD\01_SHEETS\18062-L_L2.01_IRRIGATION_SERIES.dwg - Printed on 2020-07-24 at 7:01:29 AM

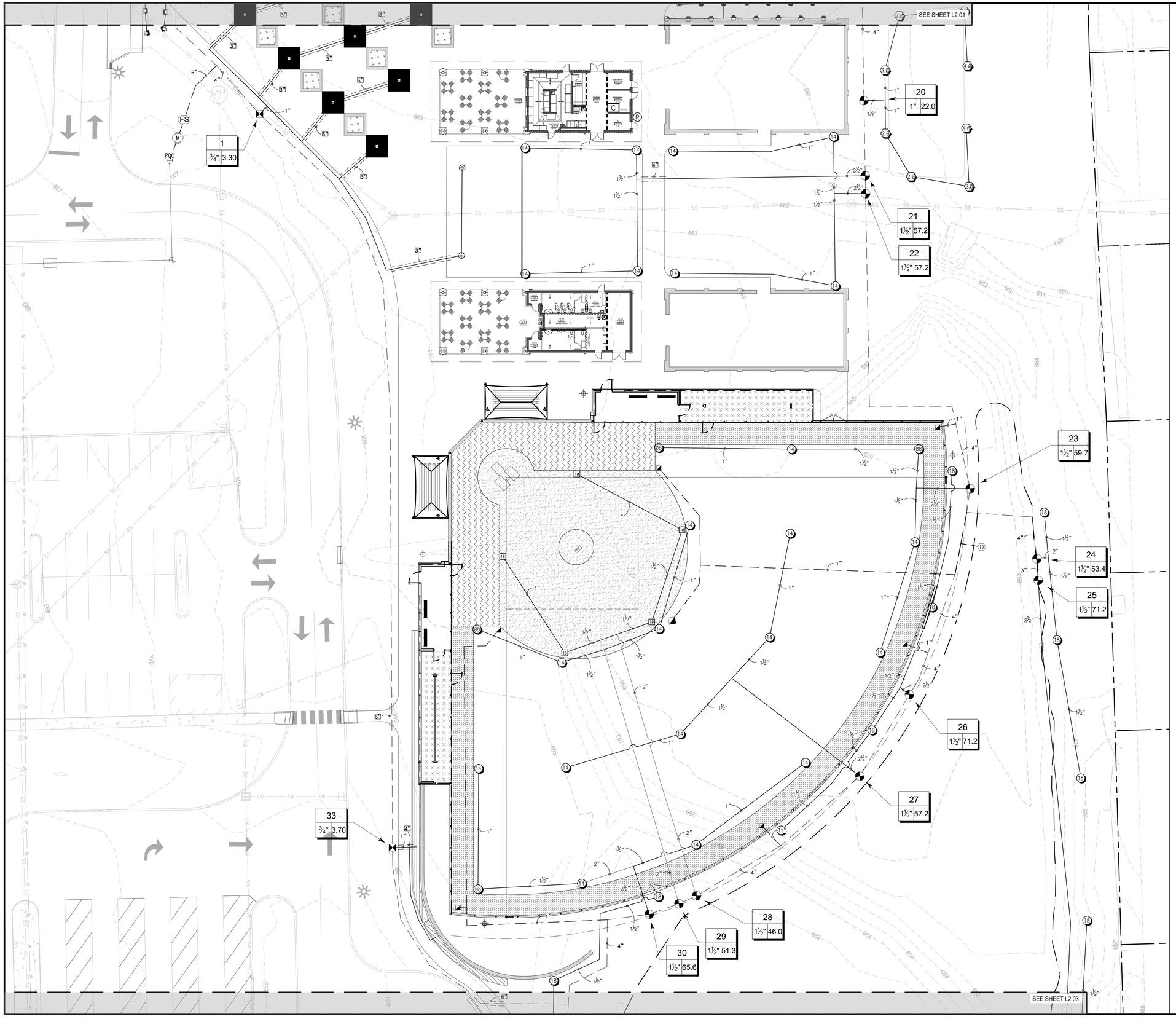

EFFLUENT WATER
WHEN A SITE IS USING NON–POTABLE OR EFFLUENT WATER AS IRRIGATION WATER, THE IRRIGATION SYSTEM SHALL BE INSTALLED USING THE INDUSTRY STANDARD PURPLE COLOR INDICATORS MARKED ON ALL PIPES, CONTROL VALVES, QUICK COUPLERS AND SPRINKLER HEADS TO PREVENT ACCIDENTAL DRINKING OF WATER.

0 20 40 60

SCALE: 1" = 20 '

TENNESSEE STATE PLANE COORDINATE SYSTEM, ZONE 5301, FIPSZONE 4100; NAD 83 DATUM

LOSE DESIGN
SPACES FOR LIFE.

THIS DRAWING AND THE DESIGN SHOWN IS THE PROPERTY OF THE ARCHITECT. REPRODUCTION, COPYING, OR USE OF THIS DRAWING WITHOUT THEIR WRITTEN CONSENT IS PROHIBITED, AND ANY INFRINGEMENT IS SUBJECT TO LEGAL ACTION.

JOSHUA A. GULICK REGISTERED AGRICULTURE & CONSERVATION LANDSCAPE ARCHITECT
07.24.2019

FREEDOM BALL FIELDS
C.O.F. AND F.S.S.D. BALL FIELD CONSTRUCTION
COF PROJECT #7139

CITY OF FRANKLIN

FRANKLIN TENNESSEE

SUBMITTALS / REVISIONS

NO.	DATE	DESCRIPTION
1	07.24.2020	MATERIALS, GATE SIZE, IRRIGATION

SHEET TITLE

IRRIGATION PLAN

PROJECT NO. 18062-1	DATE 05/08/2020
DRAWN BY JS	SCALE AS SHOWN
CHECKED BY JS	
SHEET NO. L2.02	1

N:\2018\9900-IP_FSSD_Ball_Field_CONCAD\01_SHEETS\18062-1_L2.02_IRRIGATION_SERIES.dwg - Printed on 2020-07-24 at 7:01:40 AM

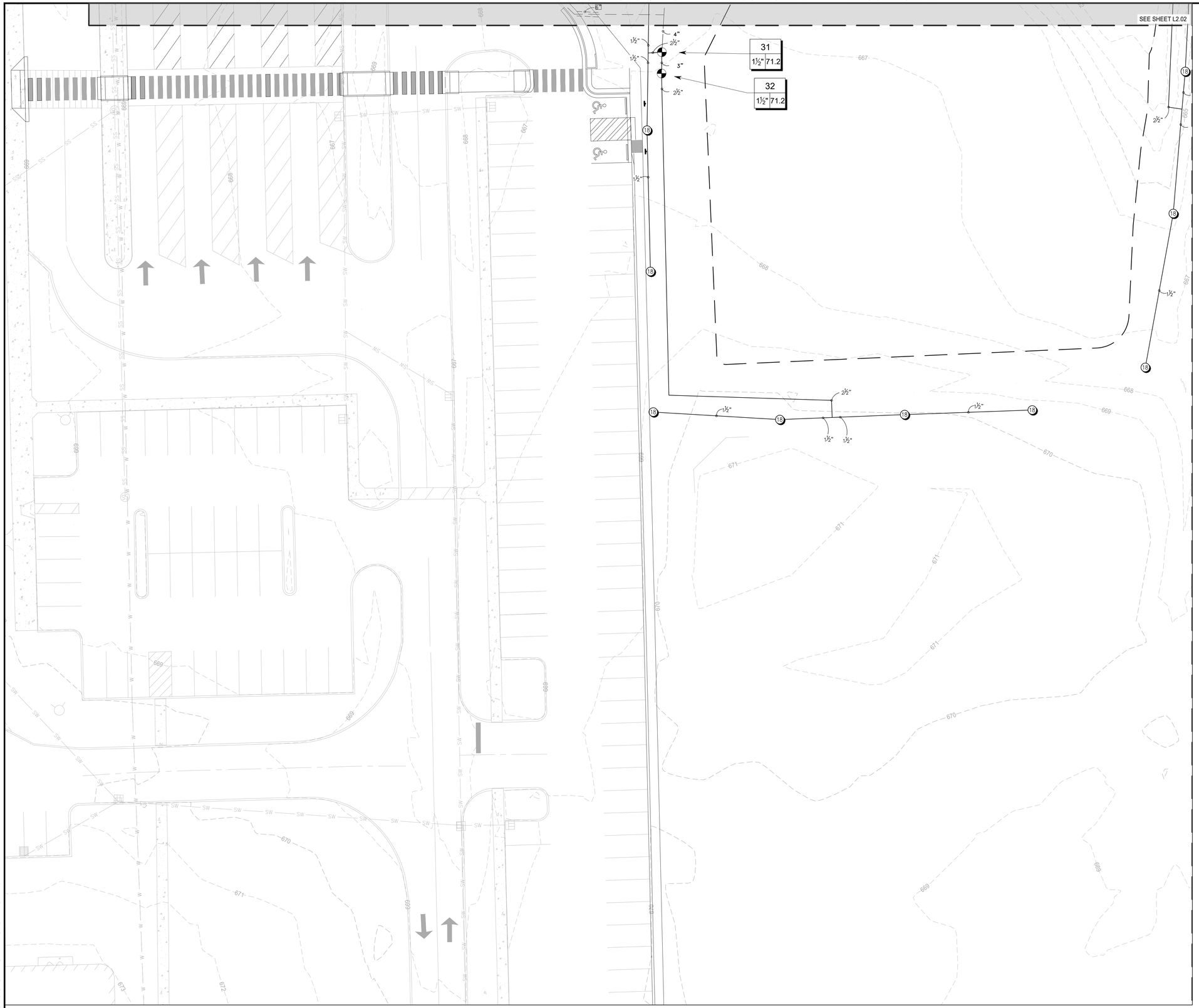

EFFLUENT WATER
WHEN A SITE IS USING NON-POTABLE OR EFFLUENT WATER AS IRRIGATION WATER, THE IRRIGATION SYSTEM SHALL BE INSTALLED USING THE INDUSTRY STANDARD PURPLE COLOR INDICATORS MARKED ON ALL PIPES, CONTROL VALVES, QUICK COUPLERS AND SPRINKLER HEADS TO PREVENT ACCIDENTAL DRINKING OF WATER.

0 20 40 60

SCALE: 1" = 20'

TENNESSEE STATE PLANE COORDINATE SYSTEM, ZONE 5301, FIPSZONE 4100; NAD 83 DATUM

LOSE DESIGN
SPACES FOR LIFE.

THIS DRAWING AND THE DESIGN SHOWN IS THE PROPERTY OF THE ARCHITECT. REPRODUCTION, COPYING, OR USE OF THIS DRAWING WITHOUT THEIR WRITTEN CONSENT IS PROHIBITED, AND ANY INFRINGEMENT IS SUBJECT TO LEGAL ACTION.

JOSHUA A. GULLICK
REGISTERED
AGRICULTURE
COMMERCE
TENNESSEE
LANDSCAPE ARCHITECT
12-09-2019

FREEDOM BALL FIELDS
C.O.F. AND F.S.S.D. BALL FIELD CONSTRUCTION
COF PROJECT #7139

CITY OF FRANKLIN

FRANKLIN TENNESSEE

SUBMITTALS / REVISIONS

NO.	DATE	DESCRIPTION
1	07.24.2020	MATERIALS, GATE SIZE, IRRIGATION

SHEET TITLE

IRRIGATION PLAN

PROJECT NO. 18062-1	DATE 05/08/2020
DRAWN BY JS	SCALE AS SHOWN
CHECKED BY JS	
SHEET NO. L2.03	1

N:\2018\18062-1F_FSSD_Ball_Field_CD\CADD\1_SHEETS\18062-1_L2.00_IRRIGATION_SERIES.dwg - Protected on 2020-07-24 at 7:01:47 AM

COF 2020-0173 Addendum 1 Attachment D

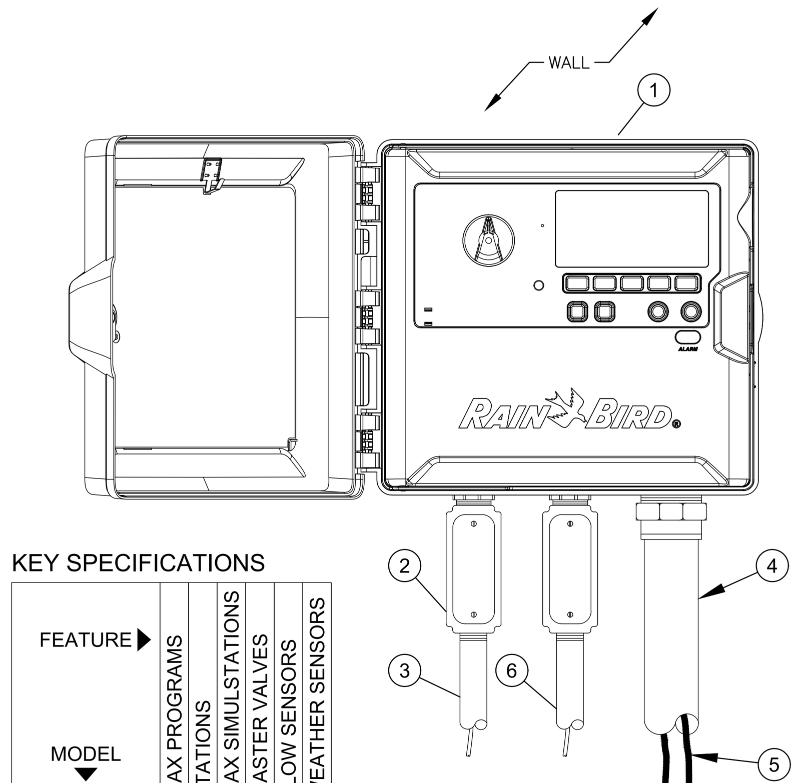

KEY SPECIFICATIONS

MODEL ▼ / FEATURE ▶	MAX PROGRAMS	STATIONS	MAX SIMULSTATIONS	MASTER VALVES	FLOW SENSORS	WEATHER SENSORS
LX-IVM	10	60	8	5	5	4
~~LX-IVM PRO~~	~~10~~	~~240~~	~~10~~	~~10~~	~~10~~	~~8~~

(1) TWO-WIRE CONTROLLER:
RAIN BIRD ESP-LXIVM/PRO IN PLASTIC CABINET WITH WALL MOUNT. INSTALL CONTROLLER AND CABINET ON WALL PER MANUFACTURER'S RECOMMENDATIONS.

(2) JUNCTION BOX

(3) 1-INCH CONDUIT AND FITTINGS FOR POWER SUPPLY WIRE

(4) 2-INCH CONDUIT AND FITTINGS FOR TWO-WIRE CABLE

(5) MAXICABLE TWO-WIRE PATH TO FIELD DEVICES
USE A DIFFERENT CABLE JACKET COLOR FOR EACH PATH.

(6) 1-INCH CONDUIT AND FITTINGS FOR GROUND WIRE. ONLY FOR OUTDOOR INSTALLATIONS.

NOTES:
1. ESP-LXIVM CONTROLLER IS AVAILABLE IN TWO MODELS. THE LXIVM WITH 60 STATIONS AND THE LMIVM-PRO WITH 240 STATIONS. REFER TO THE CHART BELOW FOR DIFFERENCES BETWEEN THE TWO MODELS.
2. USE STEEL CONDUIT FOR ABOVE GRADE AND SCH 40 PVC CONDUIT FOR BELOW GRADE CONDITIONS.
3. PROVIDE PROPER GROUNDING COMPONENTS TO ACHIEVE GROUND RESISTANCE OF 10 OHMS OR LESS. IF CONTROLLER IS MOUNTED INDOORS, USE POWER SUPPLY GROUND.

1 ESP-LX-IVM TWO WIRE CONTROLLER
N.T.S. IN PLASTIC CABINET — DETAIL-FILE

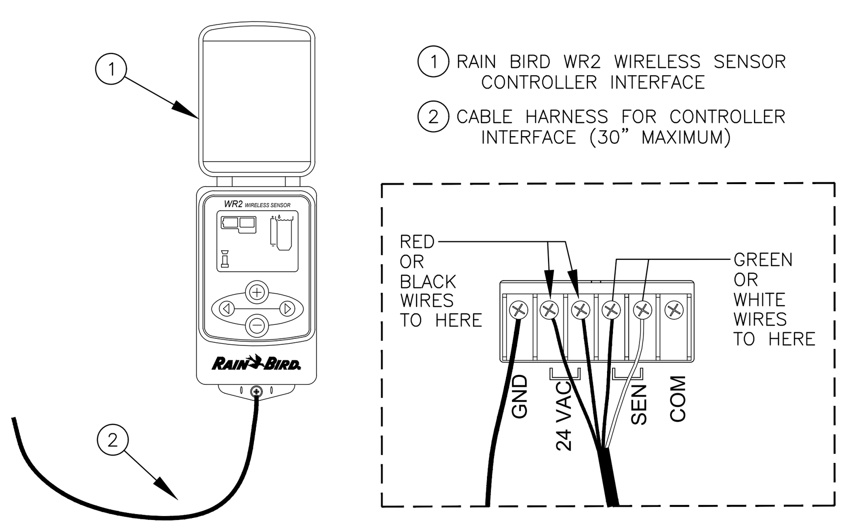

(1) RAIN BIRD WR2 WIRELESS SENSOR CONTROLLER INTERFACE

(2) CABLE HARNESS FOR CONTROLLER INTERFACE (30" MAXIMUM)

NOTES:
1. FOR BEST PERFORMANCE, THE CONTROLLER INTERFACE SHOULD BE INSTALLED AT LEAST FIVE FEET ABOVE THE GROUND.
2. IT IS RECOMMENDED THAT THE CONTROLLER INTERFACE BE INSTALLED AWAY FROM SOURCES OF ELECTRICAL INTERFERENCE (SUCH AS TRANSFORMERS, GENERATORS, PUMPS, FANS, ELECTRICAL METER BOXES) AND METAL OBJECTS TO MAXIMIZE COMMUNICATION RANGE.

2 WIRELESS RAIN SENSOR
N.T.S. WR2 SERIES CONTROLLER INTERFACE

EFFLUENT WATER
WHEN A SITE IS USING NON-POTABLE OR EFFLUENT WATER AS IRRIGATION WATER, THE IRRIGATION SYSTEM SHALL BE INSTALLED USING THE INDUSTRY STANDARD PURPLE COLOR INDICATORS MARKED ON ALL PIPES, CONTROL VALVES, QUICK COUPLERS AND SPRINKLER HEADS TO PREVENT ACCIDENTAL DRINKING OF WATER.

NOTE: MANUFACTURERS LISTED MAY CHANGE THEIR PRODUCT NUMBER OR DISCONTINUE PRODUCTS WITHOUT NOTICE. IF COMPONENTS ARE UNAVAILABLE, NOTIFY LANDSCAPE ARCHITECT IMMEDIATELY AND PROVIDE MANUFACTURER'S RECOMMENDED SUBSTITUTION FOR REVIEW PRIOR TO ORDERING OR INSTALLATION.

N:\2018\18062-1P_FSSD_Ball_Field_CDs\CAD\01_SHEETS\18062-1_L2.00_IRRIGATION_SERIES.dwg - Printed on 2020-07-24 at 7:01:50 AM.

IRRIGATION SCHEDULE

SYMBOL	MANUFACTURER/MODEL/DESCRIPTION	QTY	PSI
Q T H F	RAIN BIRD 1806-PRS-NP 8 SERIES MPR TURF SPRAY 6.0" POP-UP SPRINKLER WITH CO-MOLDED WIPER SEAL. SIDE AND BOTTOM INLET. 1/2" NPT FEMALE THREADED INLET. PRESSURE REGULATING. WITH NON POTABLE PURPLE CAP.	16	30
Q T H F	RAIN BIRD 1806-PRS-NP 10 SERIES MPR TURF SPRAY 6.0" POP-UP SPRINKLER WITH CO-MOLDED WIPER SEAL. SIDE AND BOTTOM INLET. 1/2" NPT FEMALE THREADED INLET. PRESSURE REGULATING. WITH NON POTABLE PURPLE CAP.	31	30
Q T H TQ F	RAIN BIRD 1806-PRS-NP 12 SERIES MPR TURF SPRAY 6.0" POP-UP SPRINKLER WITH CO-MOLDED WIPER SEAL. SIDE AND BOTTOM INLET. 1/2" NPT FEMALE THREADED INLET. PRESSURE REGULATING. WITH NON POTABLE PURPLE CAP.	45	30
Q T H TQ F	RAIN BIRD 1806-PRS-NP 15 SERIES MPR TURF SPRAY 6.0" POP-UP SPRINKLER WITH CO-MOLDED WIPER SEAL. SIDE AND BOTTOM INLET. 1/2" NPT FEMALE THREADED INLET. PRESSURE REGULATING. WITH NON POTABLE PURPLE CAP.	18	30
08HE-VAN 12HE-VAN 10HE-VAN 15HE-VAN	RAIN BIRD 1806-PRS-NP HE-VAN SERIES TURF SPRAY 6.0" POP-UP SPRINKLER WITH CO-MOLDED WIPER SEAL. SIDE AND BOTTOM INLET. 1/2" NPT FEMALE THREADED INLET. PRESSURE REGULATING. WITH NON POTABLE PURPLE CAP.	11	30
Q H F	RAIN BIRD 1812-PRS-NP 5 SERIES MPR SHRUB SPRAY 12.0" POP-UP SPRINKLER WITH CO-MOLDED WIPER SEAL. SIDE AND BOTTOM INLET. 1/2" NPT FEMALE THREADED INLET. WITH PRESSURE REGULATING DEVICE AND NON-POTABLE PURPLE CAP.	45	30
Q T H F	RAIN BIRD 1812-PRS-NP 10 SERIES MPR SHRUB SPRAY 12.0" POP-UP SPRINKLER WITH CO-MOLDED WIPER SEAL. SIDE AND BOTTOM INLET. 1/2" NPT FEMALE THREADED INLET. WITH PRESSURE REGULATING DEVICE AND NON-POTABLE PURPLE CAP.	92	30

SYMBOL	MANUFACTURER/MODEL/DESCRIPTION	QTY	PSI	GPM	RADIUS
2.0	RAIN BIRD 3504-PC-NP TURF ROTOR, 4.0" POP-UP. ADJUSTABLE AND FULL CIRCLE. WITH NON-POTABLE PURPLE COVER.	5	45	1.93	27'
4.0	RAIN BIRD 3504-PC-NP TURF ROTOR, 4.0" POP-UP. ADJUSTABLE AND FULL CIRCLE. WITH NON-POTABLE PURPLE COVER.	3	45	4.13	35'
08	RAIN BIRD 8005-SS-NP (2) TURF ROTOR, 5.0" POP-UP, STAINLESS STEEL RISER, STANDARD NOZZLE. WITH SEAL-A-MATIC CHECK VALVE, ADJUSTABLE 50-330 ARC, AND 360 NON-REVERSING FULL-CIRCLE. 1" (26/34) NPT. EXTENDED RADIUS IS IDEAL FOR LARGE TURF APPLICATIONS. NON-POTABLE PURPLE COVER.	12	60	8.40	49'
14	RAIN BIRD 8005-SS-NP (2) TURF ROTOR, 5.0" POP-UP, STAINLESS STEEL RISER, STANDARD NOZZLE. WITH SEAL-A-MATIC CHECK VALVE, ADJUSTABLE 50-330 ARC, AND 360 NON-REVERSING FULL-CIRCLE. 1" (26/34) NPT. EXTENDED RADIUS IS IDEAL FOR LARGE TURF APPLICATIONS. NON-POTABLE PURPLE COVER.	51	60	14.3	61'
18	RAIN BIRD 8005-SS-NP (2) TURF ROTOR, 5.0" POP-UP, STAINLESS STEEL RISER, STANDARD NOZZLE. WITH SEAL-A-MATIC CHECK VALVE, ADJUSTABLE 50-330 ARC, AND 360 NON-REVERSING FULL-CIRCLE. 1" (26/34) NPT. EXTENDED RADIUS IS IDEAL FOR LARGE TURF APPLICATIONS. NON-POTABLE PURPLE COVER.	19	60	17.8	65'
10	RAIN BIRD F4-PC, FC-SS-HS TURF ROTOR, 4.0" POP-UP, STAINLESS STEEL RISER, HIGH SPEED ROTATION, ADJUSTABLE AND FULL CIRCLE. WITH REMOVABLE SEAL-A-MATIC CHECK VALVE, 1" FEMALE THREADED INLET.	13	50	9.20	49'

SYMBOL	MANUFACTURER/MODEL/DESCRIPTION	QTY
	RAIN BIRD XCZ-075-PRF LOW FLOW DRIP CONTROL KIT, 3/4" LOW FLOW VALVE, 3/4" PRESSURE REGULATING RBY FILTER, AND 30PSI PRESSURE REGULATOR. 0.2GPM-5GPM.	4
	TREE RING IRRIGATION .9 GPH @ 12" O.C. APPROX. 20 L.F. OF TUBING PER TREE	23
	AREA TO RECEIVE DRIPLINE RAIN BIRD LD-09-18 LANDSCAPE DRIPLINE WITH 0.92GPH EMITTERS AT 18" O.C. DRIPLINE LATERALS SPACED AT 18" APART, WITH EMITTERS OFFSET FOR TRIANGULAR PATTERN.	946.7 S.F.

SYMBOL	MANUFACTURER/MODEL/DESCRIPTION	QTY
	RAIN BIRD PESBR 1", 1-1/2", AND 2" DURABLE CHLORINE-RESISTANT VALVES FOR RECLAIMED WATER APPLICATIONS. WITH SCRUBBER MECHANISM TECHNOLOGY, AND PURPLE FLOW CONTROL HANDLE.	29
	RAIN BIRD 44-NP 1" BRASS QUICK-COUPLING VALVE, WITH CORROSION-RESISTANT STAINLESS STEEL SPRING, LOCKING NON-POTABLE PURPLE RUBBER COVER, AND 2-PIECE BODY.	14
	SHUT OFF VALVE SIZE TO MATCH MAINLINE	3
M	RAIN BIRD 300-BPES-NP-HAN GLOBE 3" 3" BRASS MASTER VALVE, WITH GLOBE CONFIGURATION, AND PURPLE HANDLE FOR NON POTABLE USE. WITH A PATENTED NYLON SCRUBBER THAT SCRAPES A STAINLESS STEEL SCREEN TO PREVENT DEBRIS BUILD-UP AND CLOGGING.	1

POSSIBLE WATERING SCHEDULE

* NOTE: IT SHALL BE THE IRRIGATION CONTRACTOR'S RESPONSIBILTY TO DETERMINE, PROVIDE AND WARRANT SPECIFIC WATER VOLUME, WATER QUALITY AND WATERING FREQUENCY FOR ALL SPECIES OF TREES, SHRUBS, GROUNDCOVERS AND SOD AS IDENTIFIED ON THE LANDSCAPE PLAN.

NUMBER	MODEL	TYPE	PRECIP	SUN	MON	TUE	WED	THU	FRI	SAT	IN./WEEK	MIN./WEEK	GAL./WEEK	GAL./DAY
1	RAIN BIRD XCZ-075-PRF	DRIP EMITTER	9.19 in/h		2 min		2 min		2 min	2 min	0.75	5	16.5	4.1
2	RAIN BIRD PESBR	SHRUB SPRAY	1.29 in/h		12 min		12 min		12 min		0.75	35	1,438	479.3
3	RAIN BIRD PESBR	TURF SPRAY	1.39 in/h		18 min		18 min		18 min		1.25	54	423.3	141.1
4	RAIN BIRD PESBR	TURF ROTOR	0.67 in/h		38 min		38 min		38 min		1.25	112	3,763	1,254
5	RAIN BIRD PESBR	TURF ROTOR	1.02 in/h		25 min		25 min		25 min		1.25	74	5,446	1,815
6	RAIN BIRD PESBR	TURF ROTOR	1.01 in/h		25 min		25 min		25 min		1.25	75	4,478	1,493
7	RAIN BIRD PESBR	SHRUB SPRAY	1.31 in/h		12 min		12 min		12 min		0.75	35	1,271	423.5
8	RAIN BIRD PESBR	TURF ROTOR	0.45 in/h		57 min		57 min		57 min		1.25	169	7,250	2,417
9	RAIN BIRD PESBR	TURF ROTOR	0.83 in/h		31 min		31 min		31 min		1.25	91	6,507	2,169
10	RAIN BIRD PESBR	TURF ROTOR	0.40 in/h		63 min		63 min		63 min		1.25	188	13,442	4,481
11	RAIN BIRD PESBR	TURF ROTOR	1.04 in/h		25 min		25 min		25 min		1.25	73	4,789	1,596
12	RAIN BIRD XCZ-075-PRF	DRIP EMITTER	9.19 in/h		2 min		2 min		2 min	2 min	0.75	5	18	4.5
13	RAIN BIRD PESBR	TURF ROTOR	0.42 in/h		60 min		60 min		60 min		1.25	179	12,799	4,266
14	RAIN BIRD PESBR	TURF SPRAY	1.57 in/h		16 min		16 min		16 min		1.25	48	1,435	478.4
15	RAIN BIRD PESBR	TURF SPRAY	1.56 in/h		17 min		17 min		17 min		1.25	49	1,451	483.7
16	RAIN BIRD PESBR	TURF ROTOR	0.98 in/h		26 min		26 min		26 min		1.25	77	5,051	1,684
17	RAIN BIRD PESBR	TURF SPRAY	1.40 in/h		18 min		18 min		18 min		1.25	54	1,758	586.0
18	RAIN BIRD PESBR	TURF SPRAY	1.27 in/h		20 min		20 min		20 min		1.25	60	2,077	692.3
19	RAIN BIRD XCZ-075-PRF	AREA FOR DRIPLINE	0.69 in/h		22 min		22 min		22 min		0.75	65	202.6	67.5
20	RAIN BIRD PESBR	TURF ROTOR	0.81 in/h		31 min		31 min		31 min		1.25	93	2,050	683.2
21	RAIN BIRD PESBR	TURF ROTOR	1.52 in/h		17 min		17 min		17 min		1.25	50	2,860	953.3
22	RAIN BIRD PESBR	TURF ROTOR	1.53 in/h		17 min		17 min		17 min		1.25	50	2,860	953.3
23	RAIN BIRD PESBR	TURF ROTOR	1.31 in/h		20 min		20 min		20 min		1.25	58	3,463	1,154
24	RAIN BIRD PESBR	TURF ROTOR	0.90 in/h		28 min		28 min		28 min		1.25	84	4,486	1,495
25	RAIN BIRD PESBR	TURF ROTOR	1.06 in/h		24 min		24 min		24 min		1.25	71	5,055	1,685
26	RAIN BIRD PESBR	TURF ROTOR	0.91 in/h		28 min		28 min		28 min		1.25	83	5,910	1,970
27	RAIN BIRD PESBR	TURF ROTOR	0.41 in/h		61 min		61 min		61 min		1.25	183	10,468	3,489
28	RAIN BIRD PESBR	TURF ROTOR	1.16 in/h		22 min		22 min		22 min		1.25	65	2,990	996.7
29	RAIN BIRD PESBR	TURF ROTOR	0.88 in/h		29 min		29 min		29 min		1.25	85	4,361	1,454
30	RAIN BIRD PESBR	TURF ROTOR	0.90 in/h		28 min		28 min		28 min		1.25	84	5,510	1,837
31	RAIN BIRD PESBR	TURF ROTOR	1.02 in/h		25 min		25 min		25 min		1.25	74	5,269	1,756
32	RAIN BIRD PESBR	TURF ROTOR	1.12 in/h		23 min		23 min		23 min		1.25	67	4,770	1,590
33	RAIN BIRD XCZ-075-PRF	AREA FOR DRIPLINE	0.69 in/h		22 min		22 min		22 min		0.75	65	240.5	80.2
Unknown	CAP FOR FUTURE USE	CAP (AS INDICATED FOR FUTURE USE)	Unknown											
		TOTALS:			864		864		864	4		2,560	133,905	44,632

VALVE SCHEDULE

NUMBER	MODEL	SIZE	TYPE	GPM	WIRE	PSI	PSI @ POC	PRECIP
1	RAIN BIRD XCZ-075-PRF	3/4"	DRIP EMITTER	3.30	1,287	38.93	42.24	9.19 in/h
2	RAIN BIRD PESBR	1-1/2"	SHRUB SPRAY	41.08	1,131	34.30	38.67	1.29 in/h
3	RAIN BIRD PESBR	1"	TURF SPRAY	7.84	1,020	33.18	38.28	1.39 in/h
4	RAIN BIRD PESBR	1-1/2"	TURF ROTOR	33.60	973.9	69.89	75.23	0.67 in/h
5	RAIN BIRD PESBR	1-1/2"	TURF ROTOR	73.60	960.9	58.23	63.64	1.02 in/h
6	RAIN BIRD PESBR	1-1/2"	TURF ROTOR	59.70	949.3	65.47	70.94	1.01 in/h
7	RAIN BIRD PESBR	1-1/2"	SHRUB SPRAY	36.30	927.5	34.24	39.81	1.31 in/h
8	RAIN BIRD PESBR	1-1/2"	TURF ROTOR	42.90	633.2	65.22	71.61	0.45 in/h
9	RAIN BIRD PESBR	1-1/2"	TURF ROTOR	71.50	624.9	67.57	73.98	0.83 in/h
10	RAIN BIRD PESBR	1-1/2"	TURF ROTOR	71.50	603.4	69.38	75.80	0.40 in/h
11	RAIN BIRD PESBR	1-1/2"	TURF ROTOR	65.60	596.9	67.58	74.01	1.04 in/h
12	RAIN BIRD XCZ-075-PRF	3/4"	DRIP EMITTER	3.60	585.9	39.77	46.21	9.19 in/h
13	RAIN BIRD PESBR	1-1/2"	TURF ROTOR	71.50	572.4	68.90	75.35	0.42 in/h
14	RAIN BIRD PESBR	1-1/2"	TURF SPRAY	29.90	436.7	34.04	40.49	1.57 in/h
15	RAIN BIRD PESBR	1-1/2"	TURF SPRAY	29.61	292.7	34.24	40.54	1.56 in/h
16	RAIN BIRD PESBR	1-1/2"	TURF ROTOR	65.60	214.3	66.78	72.94	0.98 in/h
17	RAIN BIRD PESBR	1-1/2"	TURF SPRAY	32.56	186.0	33.46	39.68	1.40 in/h
18	RAIN BIRD PESBR	1-1/2"	TURF SPRAY	34.61	122.8	33.65	40.45	1.27 in/h
19	RAIN BIRD XCZ-075-PRF	3/4"	AREA FOR DRIPLINE	3.12	105.5	38.42	45.25	0.69 in/h
20	RAIN BIRD PESBR	1"	TURF ROTOR	22.04	265.5	49.16	55.37	0.81 in/h
21	RAIN BIRD PESBR	1-1/2"	TURF ROTOR	57.20	299.7	65.78	72.06	1.52 in/h
22	RAIN BIRD PESBR	1-1/2"	TURF ROTOR	57.20	307.8	65.70	71.99	1.53 in/h
23	RAIN BIRD PESBR	1-1/2"	TURF ROTOR	59.70	480.6	65.06	71.53	1.31 in/h
24	RAIN BIRD PESBR	1-1/2"	TURF ROTOR	53.40	540.3	63.88	70.49	0.90 in/h
25	RAIN BIRD PESBR	1-1/2"	TURF ROTOR	71.20	550.2	68.53	75.17	1.06 in/h
26	RAIN BIRD PESBR	1-1/2"	TURF ROTOR	71.20	578.9	65.44	71.90	0.91 in/h
27	RAIN BIRD PESBR	1-1/2"	TURF ROTOR	57.20	622.3	65.41	71.84	0.41 in/h
28	RAIN BIRD PESBR	1-1/2"	TURF ROTOR	46.00	714.8	55.16	61.47	1.16 in/h
29	RAIN BIRD PESBR	1-1/2"	TURF ROTOR	51.30	723.5	65.97	72.27	0.88 in/h
30	RAIN BIRD PESBR	1-1/2"	TURF ROTOR	65.60	737.8	66.03	72.30	0.90 in/h
31	RAIN BIRD PESBR	1-1/2"	TURF ROTOR	71.20	822.7	65.34	71.50	1.02 in/h
32	RAIN BIRD PESBR	1-1/2"	TURF ROTOR	71.20	832.2	67.87	74.06	1.12 in/h
33	RAIN BIRD XCZ-075-PRF	3/4"	AREA FOR DRIPLINE	3.70	932.6	39.98	45.65	0.69 in/h
Unknown	CAP FOR FUTURE USE		CAP (AS INDICATED FOR FUTURE USE)	210.00		72	78.35	Unknown
	Common Wire				3,230			

CRITICAL ANALYSIS

Generated: 2020-07-23 14:45

P.O.C. NUMBER: 02
Water Source Information: VERIFY WATER PRESSURE BEFORE BEGINNING WORK

FLOW AVAILABLE
Custom Max Flow: 210.00 gpm
Flow Available: 210.00 gpm

PRESSURE AVAILABLE
Static Pressure at POC: 80.00 psi
Pressure Available: 80.00 psi

DESIGN ANALYSIS
Maximum Multi-valve Flow: 210.00 gpm
Flow Available at POC: 210.00 gpm
Residual Flow Available: 0.00 gpm

Pressure Req. at Critical Station: 72.00 psi
Loss for Fittings: 0.31 psi
Loss for Main Line: 3.08 psi
Loss for POC to Valve Elevation: 0.00 psi
Loss for Backflow: 0.00 psi
Loss for Master Valve: 2.96 psi
Critical Station Pressure at POC: 78.35 psi
Pressure Available: 80.00 psi
Residual Pressure Available: 1.65 psi

SYMBOL	DESCRIPTION	QTY
D	DRAIN VALVE SIZE TO MATCH MAINLINE	2
C	RAIN BIRD ESPLXIVM TWO-WIRE COMMERCIAL CONTROLLER. 60 STATIONS. UV-RESISTANT, OUTDOOR-RATED, PLASTIC LOCKING WALL-MOUNTABLE CASE. AVAILABLE IN THE US MARKET, INTERNATIONAL, EUROPEAN, OR AUSTRALIAN MARKETS.	1
R	RAIN BIRD WR2-RFS WIRELESS RAIN/FREEZE SENSOR.	1
FS	RAIN BIRD FS-300-P 3" FLOW SENSOR FOR USE WITH RAIN BIRD MAXICOM, SITECONTROL, AND ESP-LXD CENTRAL CONTROL SYSTEMS. PLASTIC (PVC) MODEL. SUGGESTED OPERATING RANGE OF 20.0 GPM TO 300.0 GPM. SENSORS SHOULD BE SIZED FOR FLOW RATHER THAN PIPE SIZE.	1
X X	CAP FOR FUTURE USE CAP AT THE MAINLINE OR LATERAL LINE FOR FUTURE USE. THE PRESSURE AND FLOW PROVIDED TO THAT LOCATION ARE INDICATED NEXT TO THE CAP SYMBOL.	1
POC	VERIFY WATER PRESSURE BEFORE BEGINNING WORK	1
	IRRIGATION LATERAL LINE: PVC CLASS 200 SDR 21	9,841 L.F.
	IRRIGATION MAINLINE: PVC CLASS 200 SDR 21	3,244 L.F.
	PIPE SLEEVE: PVC SCHEDULE 40 TYPICAL PIPE SLEEVE FOR IRRIGATION PIPE. PIPE SLEEVE SIZE SHALL ALLOW FOR IRRIGATION PIPING AND THEIR RELATED COUPLINGS TO EASILY SLIDE THROUGH SLEEVING MATERIAL. EXTEND SLEEVES 18 INCHES BEYOND EDGES OF PAVING OR CONSTRUCTION.	345.3 L.F.

Valve Callout
— Valve Number
— Valve Flow
#" — Valve Size

NOTE: IRRIGATION MAINLINE AND LATERAL ROUTING IS DIAGRAMMATIC. IRRIGATION CONTRACTOR TO ROUT ALL MAINLINE AND LATERALS WITHIN PROJECT BOUNDARIES AND THROUGH SLEEVES AND BEDS.

LIABILITY STATEMENT:

THE PURPOSE OF THIS IRRIGATION PLAN IS TO PROVIDE A PHYSICAL LAYOUT OF IRRIGATION EQUIPMENT TO ASSIST THE CONTRACTOR IN ACCURATELY ESTIMATING THE COSTS TO BID THE SPRINKLER SYSTEM. THE DESIGN INTENT IS TO PROVIDE THE CONTRACTOR WITH A DIAGRAMMATIC LAYOUT OF SPRINKLER EQUIPMENT, WHICH WILL PROVIDE ADEQUATE WATER COVERAGE FOR THE LANDSCAPE MATERIALS WITHIN THE SCOPE OF WORK UNDER THIS CONTRACT. THESE PLANS AND THE MATERIAL'S SPECIFIED ARE SUBJECT TO CHANGE WITHOUT NOTICE TO THE CONTRACTOR. PRIOR TO BIDDING THIS CONTRACT THE CONTRACTOR WILL VERIFY ALL IRRIGATION MATERIAL MODEL NUMBERS, DIMENSIONS, COMPATIBILITY OF COMPONENT ASSEMBLIES, MAINLINE AND ZONE HYDRAULICS, ELECTRICAL COMPONENTS, WIRING, ALL SLEEVES, WATER AND ELECTRICAL SOURCE'S, PRESSURE AND APPLICABLE SITE CONDITIONS, WHICH MAY ADVERSELY AFFECT EITHER THE COST OR PERFORMANCE OF THIS SPRINKLER SYSTEM. IF A CONFLICT IS FOUND THE CONTRACTOR WILL NOTIFY THE OWNER IN WRITING AND WILL NOT BID THE WORK UNTIL THE OWNER HAS RESOLVED THE CONFLICT AND ISSUED IN WRITING A "NOTICE TO PROCEED". IF A CONFLICT IS FOUND AFTER THE CONTRACT HAS BEEN SIGNED THE CONTRACTOR WILL RESOLVE THE CONFLICT AT HIS OWN EXPENSE AND AT NO ADDITIONAL COST TO THE OWNER. CHANGE ORDERS WILL NOT BE ACCEPTED FROM THE CONTRACTOR TO INCREASE THE CONTRACT AMOUNT AFTER THE CONTRACT HAS BEEN SIGNED FOR THE AREA WITHIN THE SCOPE OF WORK UNDER THIS CONTRACT. SLEEVING MAY OR MAY NOT BE SHOWN OR CALLED OUT ON THESE PLANS, IT REMAINS THE RESPONSIBLE OF THE CONTRACTOR TO INSTALL ALL SLEEVES NECESSARY WHEREVER THEY MAY BE REQUIRED. THE IRRIGATION MATERIALS USED ON THIS PLAN HAVE BEEN CAREFULLY SELECTED FOR QUALITY, DURABILITY, AND LONGEVITY AND HAVE BEEN HYDRAULICALLY ENGINEERED INTO THIS PROJECT. CONSEQUENTLY THESE MATERIALS ARE NOT SUBJECT TO CHANGE WITHOUT WRITTEN APPROVAL FROM THE OWNER. PRIOR TO STARTING THE WORK THE CONTRACTOR WILL SUBMIT TO THE OWNER A CATALOG CUT SHEET, DESCRIPTION, QUANTITY AND COST OF EACH ITEM TO BE INSTALLED. THE CONTRACTOR WILL NOT START THE WORK UNTIL THE OWNER HAS APPROVED THE MATERIAL LIST AND ISSUED A WRITTEN "NOTICE TO PROCEED". THE CONTRACTOR MAY SUBMIT A WRITTEN REQUEST TO THE OWNER FOR A "MATERIAL SUBSTITUTION" IF A PRODUCT HAS BECOME OBSOLETE OR HAS A LEAD TIME THAT WILL DELAY THE PROJECT. THE CONTRACTOR WILL INCLUDE IN THE "REQUEST FOR MATERIAL SUBSTITUTION" THE COST OF THE ITEM SPECIFIED WITH THE COST OF THE ITEM BEING REQUESTED FOR SUBSTITUTION. IF THE COST OF THE PROPOSED ITEM FOR SUBSTITUTION IS LESS THAN THE ITEM SPECIFIED THE CONTRACTOR WILL DEDUCT THAT AMOUNT FROM THE CONTRACT. IF THE COST OF THE PROPOSED ITEM FOR SUBSTITUTION IS MORE THAN THE ITEM SPECIFIED THE CONTRACTOR MAY SUBSTITUTE THE ITEM AT NO ADDITIONAL EXPENSE OR COST TO THE OWNER. THE INTENT IS, THE CONTRACTOR WILL NOT BE ALLOWED TO MAKE HIGHER PROFITS BY SUBSTITUTING INFERIOR OR LESS EXPENSIVE PRODUCTS. PRIOR TO COMPLETION OF THE WORK THE CONTRACTOR WILL TURNOVER TO THE OWNER ALL "ORIGINAL INVOICE'S" SO THE OWNER CAN VERIFY THE "DATE OF PURCHASE" TO VALIDATE THE WARRANTEE TIME LIMIT. PRODUCTS INSTALLED THAT WERE NOT APPROVED BY THE OWNER OR ON THE ORIGINAL PLANS WILL BE ORDERED REMOVED AND REPLACED AT THE EXPENSE OF THE CONTRACTOR AT NO ADDITIONAL COST TO THE OWNER; FINAL PAYMENT MAY BE WITHHELD UNTIL ALL PRODUCTS SPECIFIED HAVE BEEN PROPERLY INSTALLED.

TENNESSEE STATE PLANE COORDINATE SYSTEM, ZONE 5301, FIPSZONE 4100; NAD 83 DATUM

LOSE DESIGN
SPACES FOR LIFE.

THIS DRAWING AND THE DESIGN SHOWN IS THE PROPERTY OF THE ARCHITECT. REPRODUCTION, COPYING, OR USE OF THIS DRAWING WITHOUT THEIR WRITTEN CONSENT IS PROHIBITED, AND ANY INFRINGEMENT IS SUBJECT TO LEGAL ACTION.

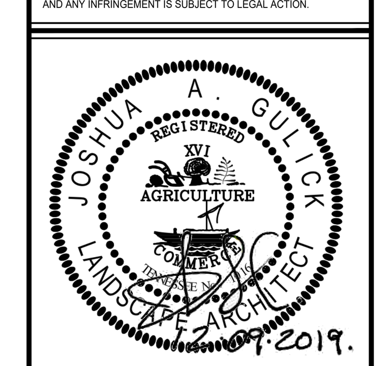

FREEDOM BALL FIELDS
C.O.F. AND F.S.S.D. BALL FIELD CONSTRUCTION
COF PROJECT #7139
CITY OF FRANKLIN
FRANKLIN
TENNESSEE

SUBMITTALS / REVISIONS

NO.	DATE	DESCRIPTION
1	07.24.2020	MATERIALS, GATE SIZES, IRRIGATION

SHEET TITLE
IRRIGATION NOTES & SCHEDULES

PROJECT NO.	DATE
18062-1	05/08/2020
DRAWN BY: JS	SCALE: AS SHOWN
CHECKED BY: JS	
SHEET NO.	L2.10 (revision 1)

EFFLUENT WATER
WHEN A SITE IS USING NON-POTABLE OR EFFLUENT WATER AS IRRIGATION WATER, THE IRRIGATION SYSTEM SHALL BE INSTALLED USING THE INDUSTRY STANDARD PURPLE COLOR INDICATORS MARKED ON ALL PIPES, CONTROL VALVES, QUICK COUPLERS AND SPRINKLER HEADS TO PREVENT ACCIDENTAL DRINKING OF WATER.

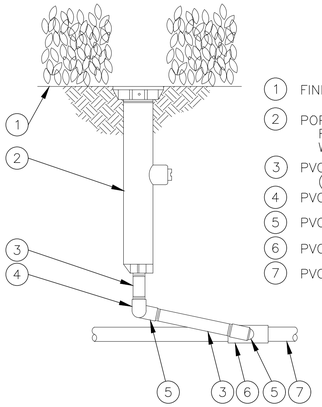

1 POP-UP TURF SPRAY SPRINKLER
N.T.S. 1806 W/ SWING JOINT

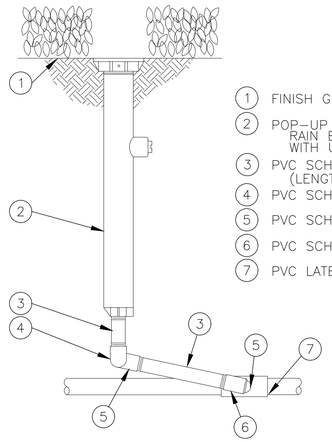

2 POP-UP SHRUB SPRAY SPRINKLER
N.T.S 1812 W/ SWING JOINT

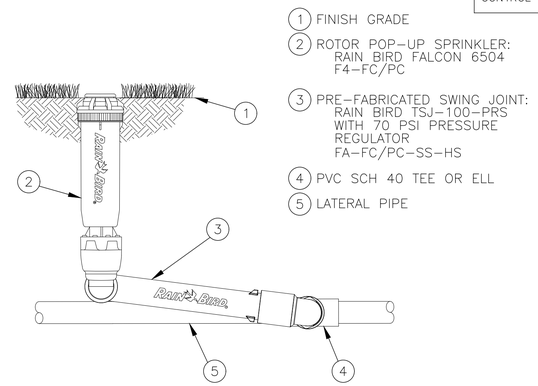

3 ROTOR POP-UP SPRINKLER - FALCON 6504
N.T.S. W/ SWING JOINT

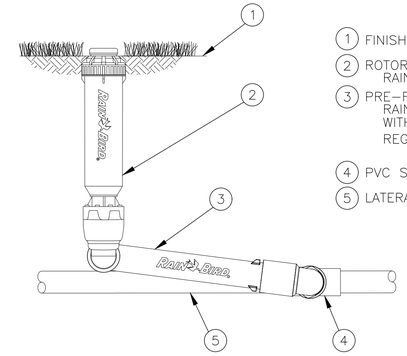

4 ROTOR POP-UP SPRINKLER - 8005
N.T.S W/ SWING JOINT

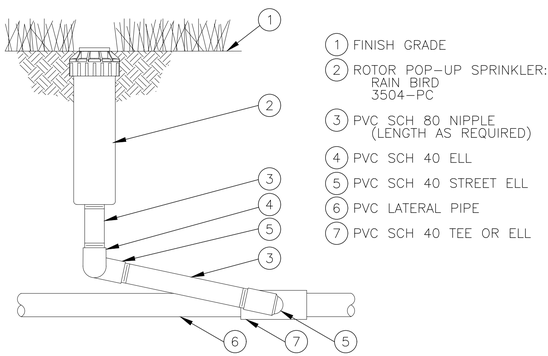

5 ROTOR POP-UP SPRINKLER - 3504
N.T.S. W/ SWING JOINT

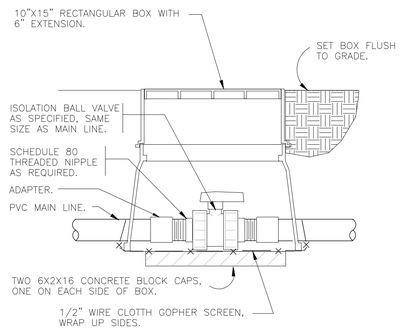

5 TRUE UNION BALL ISOLATION VALVE
1 1/2" = 1'-0" SITEBBQ-DG-74

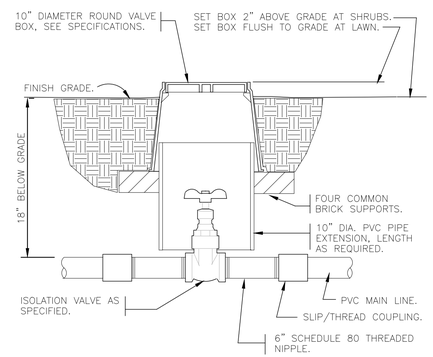

6 BRASS ISOLATION VALVE
1 1/2" = 1'-0" 328406.33-01

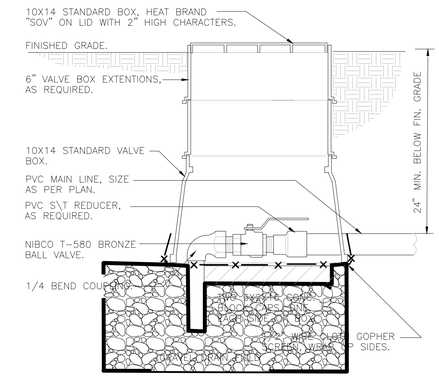

7 DRAIN VALVE
NTS 32 8409.86-01

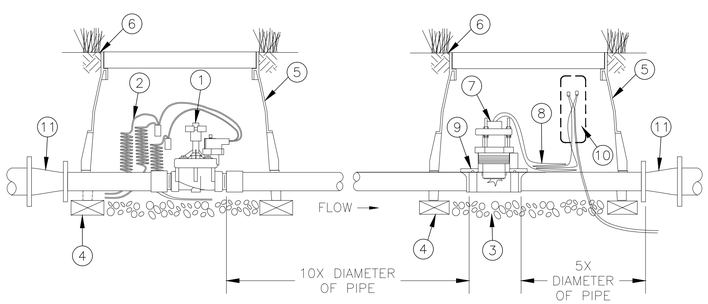

NOTE:
1. REFER TO RAIN BIRD TECHNICAL DATA FOR FLOW SENSOR INSTALLATION BASED ON PIPE SIZING PARAMETERS.

9 IQ MASTER VALVE (NORMALLY CLOSED) AND INSERTION STYLE FLOW SENSOR
N.T.S.

1. NORMALLY CLOSED MASTER VALVE: RAIN BIRD PEB OR PGA NORMALLY CLOSED MASTER VALVE
2. WIRE TO SATELLITE CONTROLLER MASTER VALVE CIRCUIT (36-INCH EXPANSION COIL, EACH WIRE)
3. 3-INCH MINIMUM DEPTH OF 3/4-INCH WASHED GRAVEL
4. BRICK (1 OF 4)
5. RECTANGULAR VALVE BOX WITH COVER: RAIN BIRD VB-STD
6. FINISH GRADE
7. FLOW SENSOR: RAIN BIRD FS SERIES
8. PE-CABLE TO FLOW SENSING EQUIPMENT AT SATELLITE CONTROLLER ASSEMBLY (36-INCH EXPANSION COIL)
9. DOUBLE-STRAP SADDLE
10. WIRE SPLICE: SEE RAIN BIRD DETAIL PE-SPLICE-TW FOR SPLICE. SEE FLOW SENSOR WIRING DETAIL FOR WIRING DIAGRAM
11. CONCENTRIC REDUCER

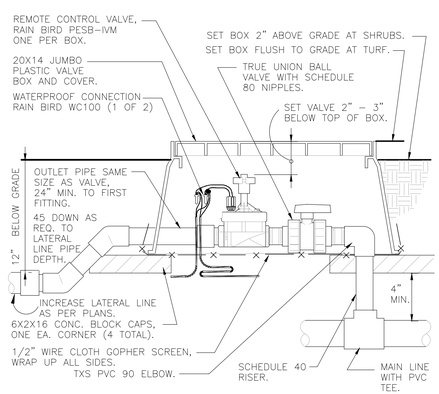

10 ELECTRIC REMOTE-CONTROL VALVE W/ IVM W/TRUE UNION BALL ISOLATION VALVE
1 1/2" = 1'-0"

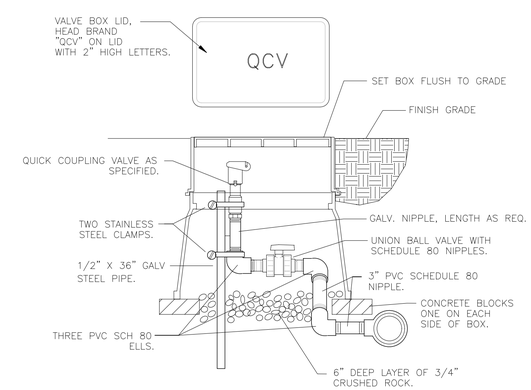

11 QUICK COUPLER W/ TRUE UNION BALL VALVE
1 1/2" = 1'-0"

TENNESSEE STATE PLANE COORDINATE SYSTEM, ZONE 5301, FIPSZONE 4100; NAD 83 DATUM

LOSE DESIGN
SPACES FOR LIFE.

THIS DRAWING AND THE DESIGN SHOWN IS THE PROPERTY OF THE ARCHITECT. REPRODUCTION, COPYING, OR USE OF THIS DRAWING WITHOUT THEIR WRITTEN CONSENT IS PROHIBITED, AND ANY INFRINGEMENT IS SUBJECT TO LEGAL ACTION.

JOSHUA A. GILLICK REGISTERED AGRICULTURE LANDSCAPE ARCHITECT 7/2019.

FREEDOM BALL FIELDS
C.O.F. AND F.S.S.D. BALL FIELD CONSTRUCTION
COF PROJECT #7139
CITY OF FRANKLIN
FRANKLIN TENNESSEE

SUBMITTALS / REVISIONS

NO.	DATE	DESCRIPTION
1	07.24.2020	MATERIALS, GATE SIZE, IRRIGATION

SHEET TITLE
IRRIGATION DETAILS

PROJECT NO.	DATE
18062-1	05/08/2020
DRAWN BY JS	SCALE AS SHOWN
CHECKED BY JS	

SHEET NO. L2.11 1

N:\2018\18062-IP_FSSD_Ball_Field_CONCAN\01_SHEETS\18062-L.L200_IRRIGATION_DETAILS.dwg - Printed on 2020-07-24 at 7:01:53 AM.

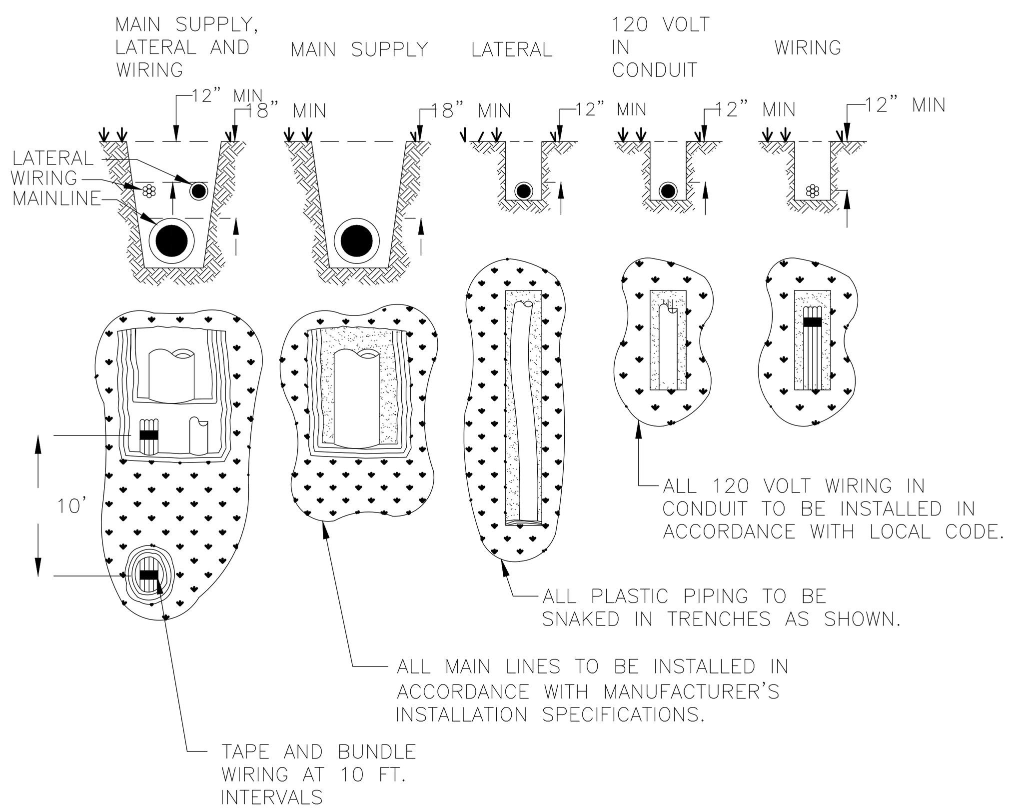

1 TYPICAL TRENCHING DETAILS

N.T.S.

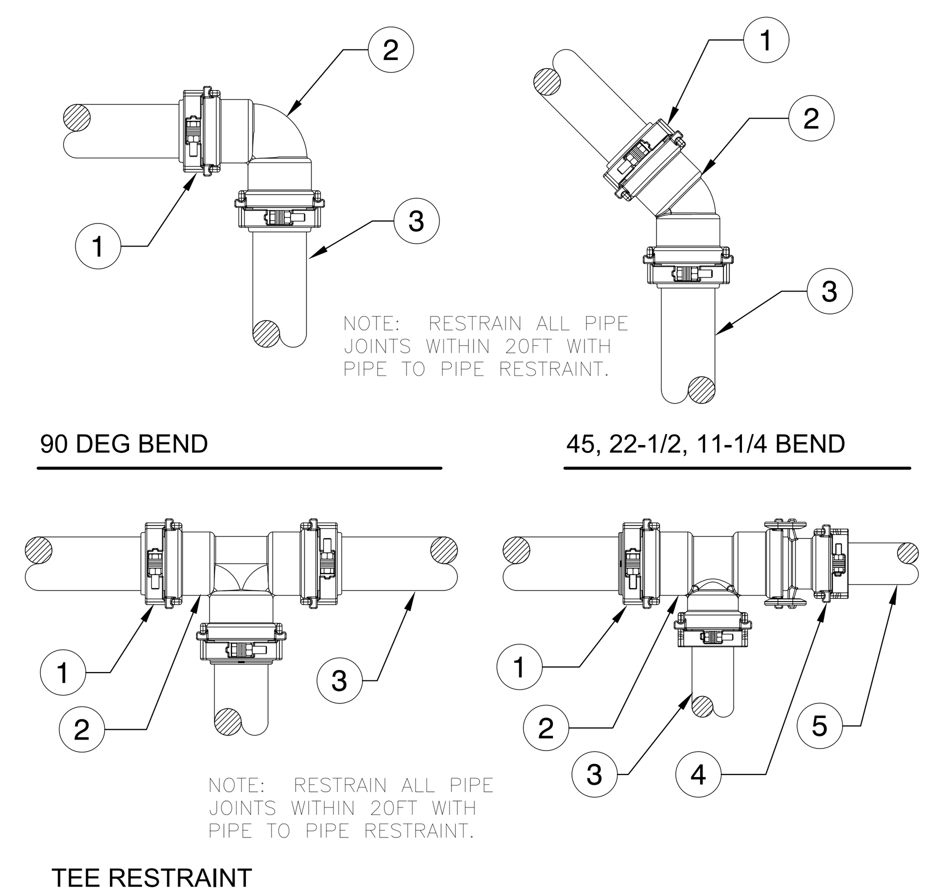

1. TYPICAL DUCTILE IRON GRIP RING AT PIPE.
2. TYPICAL DUCTILE IRON FITTING WITH RESTRAINT LUGS. FITTINGS SHALL HAVE DEEP BELL PUSH-ON JOINTS WITH GASKETS.
3. TYPICAL IPS PVC PIPE, PREPARED FOR FITTING AS PER NOTES AND MFG DIRECTIONS.
4. SPIGOT END OF REDUCER INSERTING INOT THE BELL OF JOINT. "LOCK" REDUCER TO MAIN FITTING.
5. REDUCED PIPE AS REQUIRED.

1. REVIEW THE MANUFACTURER PIPE PREPARTION DIRECTIONS FOR CUTTING THE PIPE, CLEANING, MARKING, LUBRICATING, AND ALIGNING AND FITTING.
2. INSERT THE BEVELED SPIGOT PIPE INTO THE FITTING.
3. ASSEMBLE GRIP RING ON PIPE AND TIGHTEN CLAMP BOLTS PER MFG DIRECTIONS.
4. SLIDE I-BOLTS THROUGHT SLOTS IN GRIP RINGS AND AROUND FITTING LUGS, TIGHTEN TO MFG SPECS.

2 HARCO FITTING TO PIPE JOINT RESTRAINT SYSTEM

N.T.S.

* ALL FITTINGS FOR MAINLINE PIPES 4" AND LARGER WILL BE HARCO DUCTILE IRON GASKETED FITTINGS OR APPROVED EQUAL FOR USE WITH PVC.

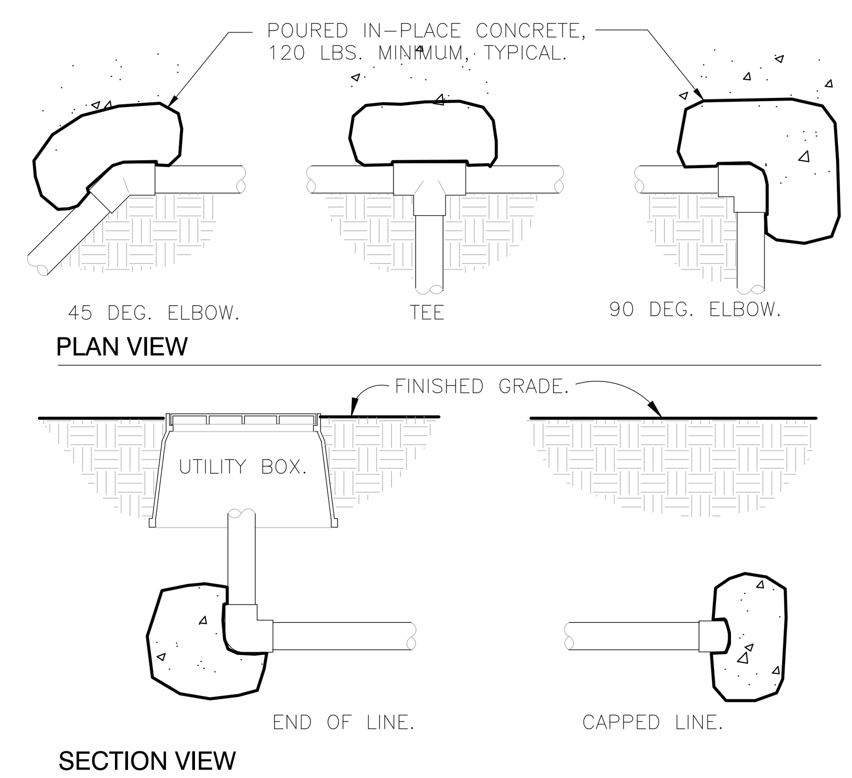

3 THRUST BLOCKING

N.T.S.

NOTE:
- ALL SLEEVES TO EXTEND 2' BEYOND BACK OF CURB ON EACH END.
- ALL SLEEVES UNDER SIDEWALKS SHALL BE SCH 40 PVC OR STRONGER. SLEEVES UNDER DRIVEWAYS, ROADWAYS OR PAVED PARKING SHALL BE SCH 80 PVC.
- SLEEVES SHALL BE INSTALLED UNDER ALL PROPOSED PAVEMENT AREAS.
- STUB UP SLEEVE PIPE ABOVE GROUND SURFACE AND CAP.
- NO 90° OR 45° COUPLINGS TO BE USED ON SLEEVES.
- SLEEVES MUST BE STRAIGHT TO ALLOW PIPE TO BE INSERTED BY IRRIGATION CONTRACTOR
- CONTRACTOR SHALL LOCATE SLEEVES AS NECESSARY TO ACCOMMODATE EXISTING VEGETATION, UTILITIES, OR OTHER EXISTING CONDITIONS.
- IF ROAD CROSSINGS ARE DESIGNATED AS BEING BORE LOCATIONS, THE BORE MUST BE AMPLE SIZE TO ACCOMMODATE THE SIZE SLEEVE SPECIFIED.
- SLEEVES NOT INSTALLED AT PROPER DEPTH WILL BE REINSTALLED TO CONFORM TO DETAIL.

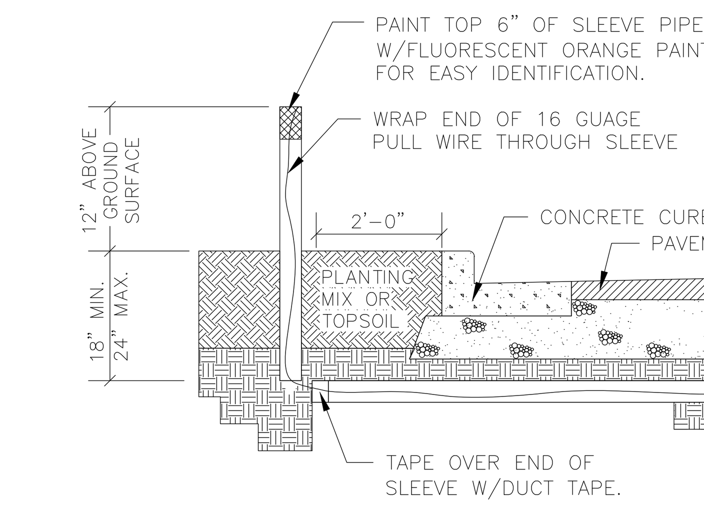

CONTRACTOR TO VERIFY SLEEVE INTEGRITY PRIOR TO FINAL PAVING.

4 SLEEVING INSTALLATION DETAIL

N.T.S

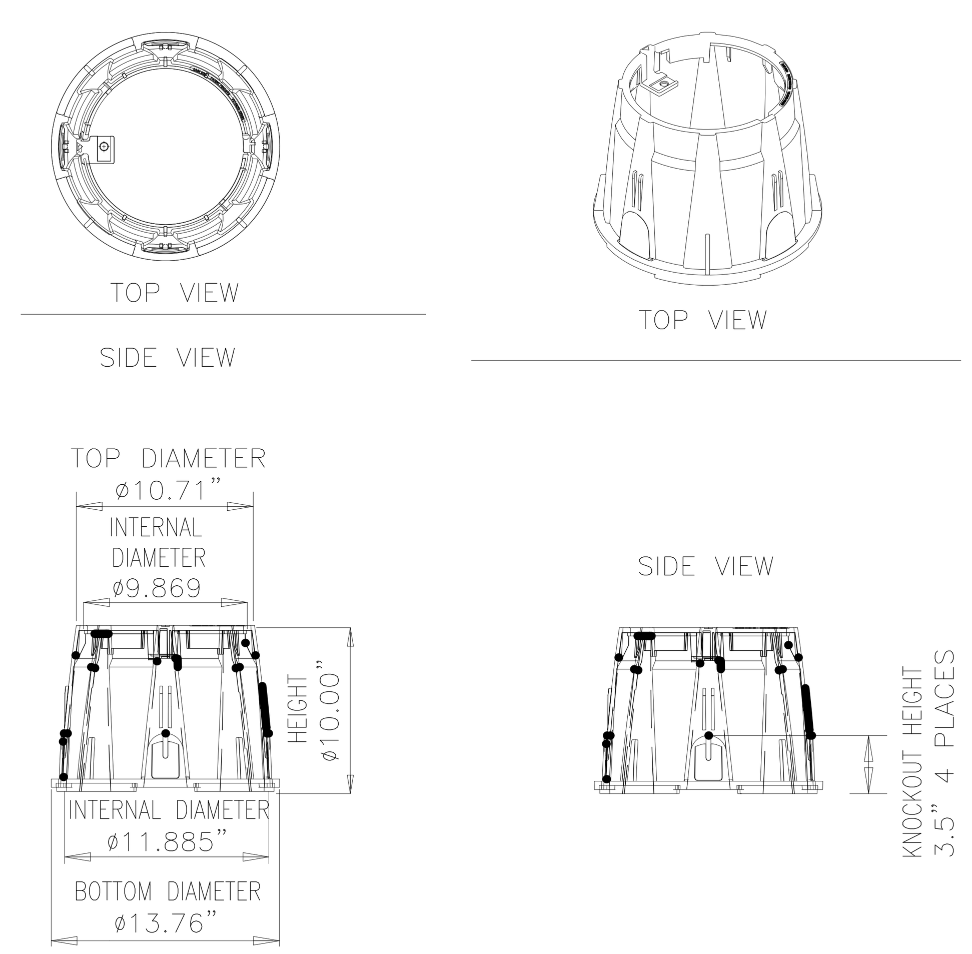

5 RAIN BIRD 10" ROUND VALVE BOX DIMENSIONS

N.T.S. SITEBBQ-DG-57

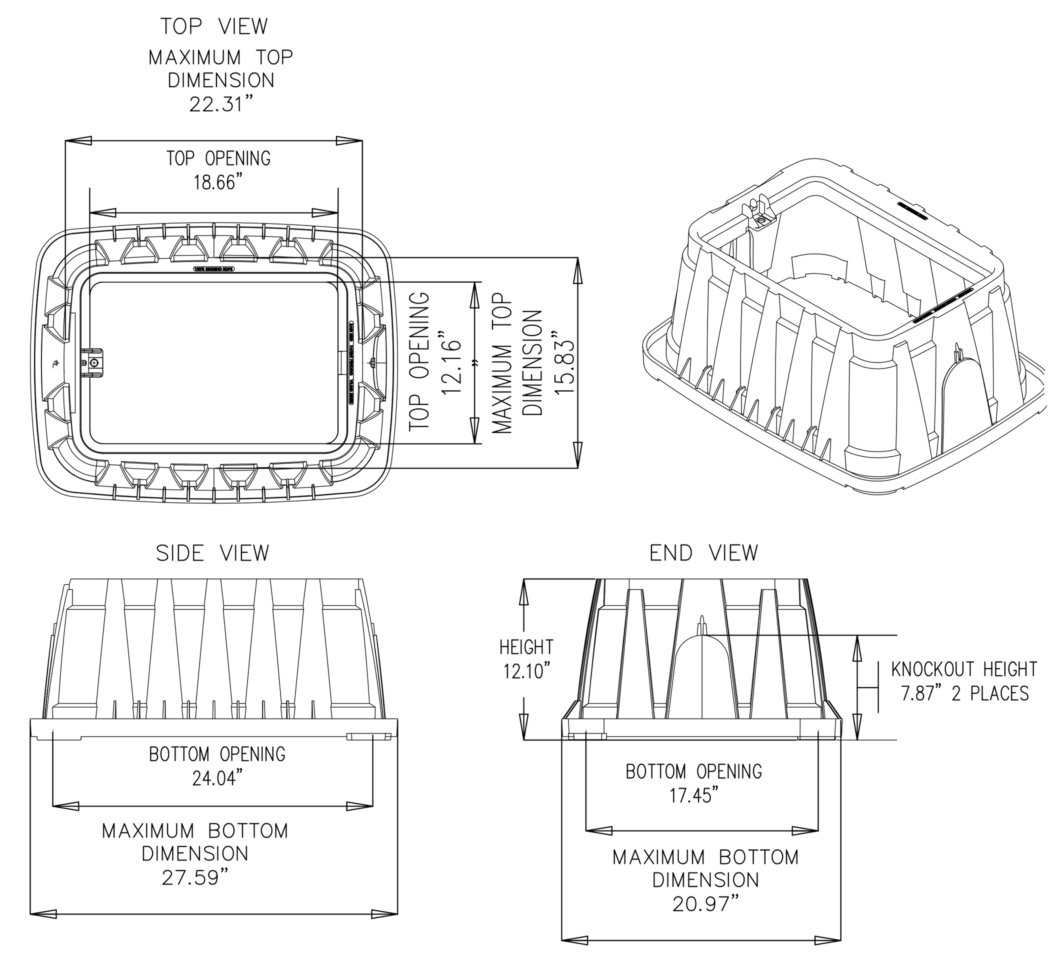

6 JUMBO VALVE BOX DIMENSIONS

N.T.S.

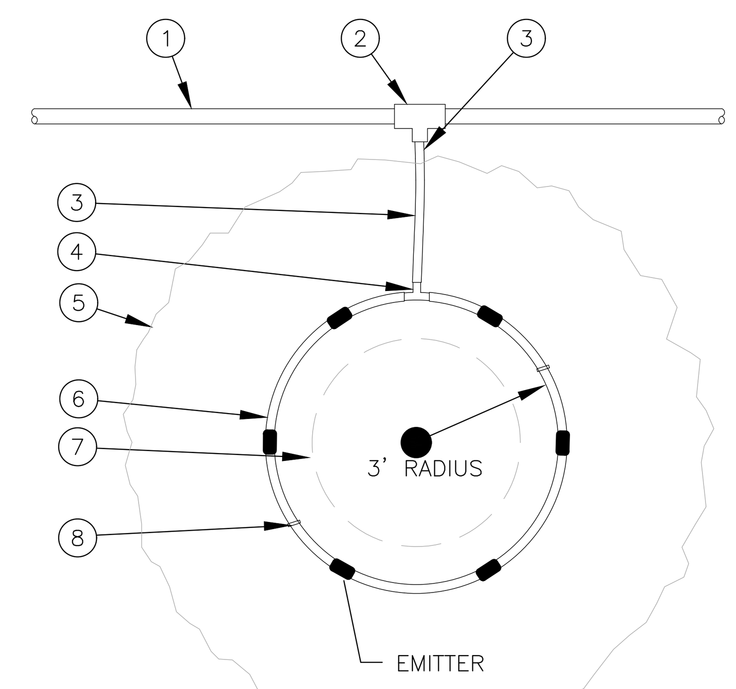

1. PVC DRIP MANIFOLD PIPE
2. PVC SCH 40 TEE OR EL
3. ½" POLYETHYLENE TUBING: RAIN BIRD XF SERIES BLANK TUBING
4. BARB TEE INSERT FITTING: RAIN BIRD XFD-TEE
5. PROJECTED CANOPY LINE OF TREE
6. SUBSURFACE DRIPLINE: RAIN BIRD XFS0918 DRIPLINE. PLACE AS SHOWN (LENGTH IS 9 LINEAR FEET)
7. ROOT BALL
8. TIE DOWN STAKE: RAIN BIRD TDS-050 WITH BEND (QUANTITY AS REQUIRED, SEE NOTES 1-2 BELOW)

NOTES:
1. PLACE TIE DOWN STAKES EVERY THREE FEET IN SAND, FOUR FEET IN LOAM, AND FIVE FEET IN CLAY.
2. AT FITTINGS WHERE THERE IS A CHANGE OF DIRECTION SUCH AS TEES OR ELBOWS, USE TIE-DOWN STAKES ON EACH LEG OF THE CHANGE OF DIRECTION.

7 XFS SUBSURFACE DRIPLINE AROUND TREE

N.T.S.

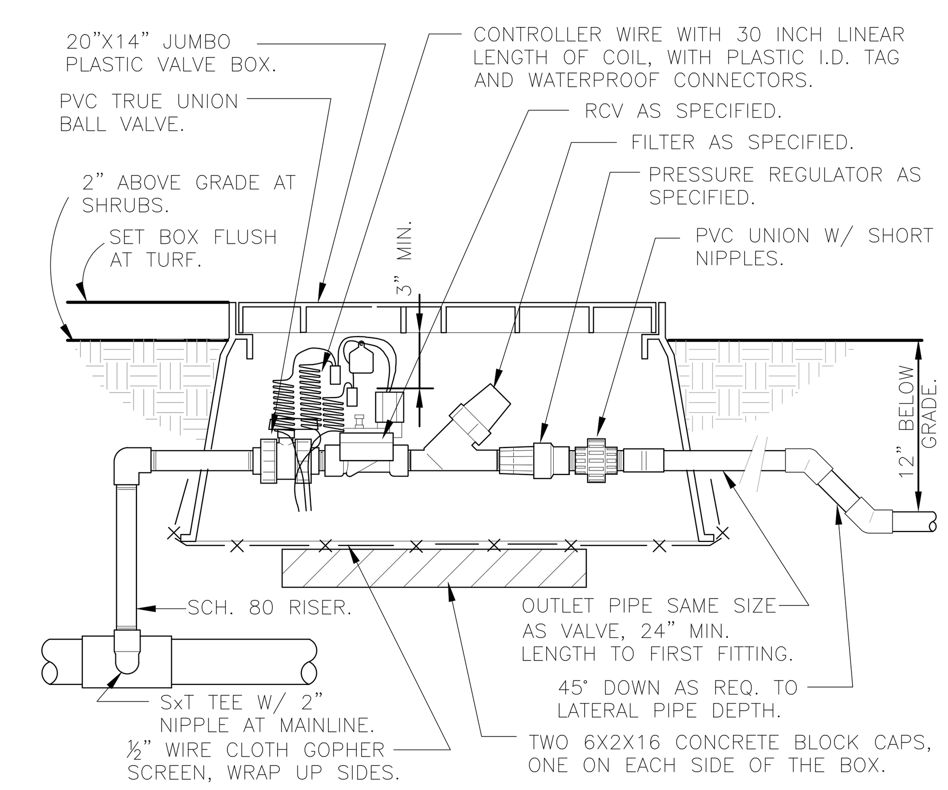

8 3/4" DRIP VALVE/FILTER/REGULATOR

1 1/2" = 1'-0" SITEBBQ-DG-131

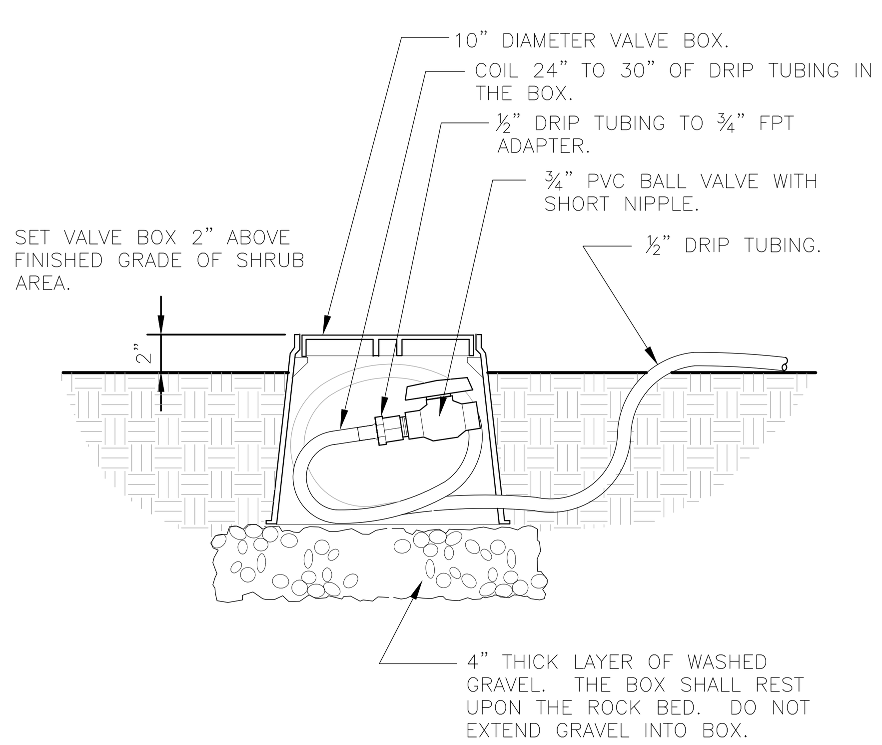

9 DRIP FLUSH VALVE

1 1/2" = 1'-0" SITEBBQ-DG-41

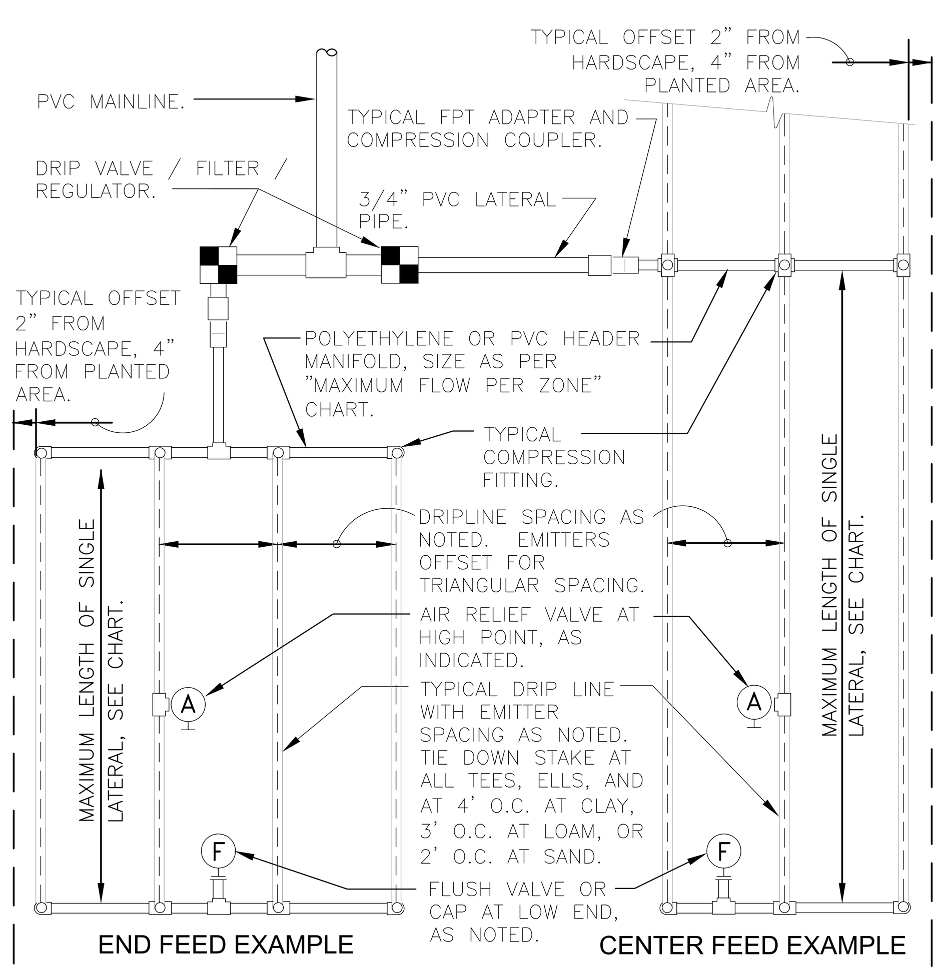

MAXIMUM LATERAL LENGTH (FEET)

PSI	12" SPACING 0.6	12" SPACING 0.9	18" SPACING 0.6	18" SPACING 0.9	24" SPACING 0.6	24" SPACING 0.9
	EMITTER FLOW RATE GPH					
10	125	96	175	135	218	171
20	249	191	350	171	442	340
30	307	236	434	333	550	422
40	350	268	495	380	627	171
50	125	96	175	135	218	171
60	125	96	175	135	218	171

GRID PRECIPITATION RATES (IN/HR)

EMITTER SPACING	LATERAL SPACING	EMITTER FLOW RATE 0.6	EMITTER FLOW RATE 0.9
12	12	0.96	1.44
18	18	0.69	1.03
24	24	0.28	0.41

LATERAL FLOW PER 100 FT (GPM)

EMITTER FLOW	12" SPACING	18" SPACING	24" SPACING
0.6 GPH	1.0 GPM	0.67 GPM	0.50 GPM
0.9 GPH	1.5 GPM	1.0 GPM	0.75 GPM

MAXIMUM FLOW PER ZONE

	MAX GPM	PSI LOSS
SCHEDULE 40 PVC HEADER SIZE		
1/2"	4.7 GPM	7.7 PSI
3/4"	8.3 GPM	5.6 PSI
1"	13.5 GPM	4.2 PSI
1-1/2"	33.9 GPM	2.9 PSI
2"	52.4 GPM	1.9 PSI
POLY PIPE HEADER SIZE		
1/2"	4.7 GPM	8.8 PSI
3/4"	8.3 GPM	6.3 PSI
1"	13.5 GPM	4.8 PSI
1-1/2"	31.8 GPM	2.9 PSI
2"	52.4 GPM	2.2 PSI

SLOPED CONDITION NOTE:
1. DRIPLINE LATERALS SHOULD FOLLOW THE CONTOURS OF THE SLOPE WHENEVER POSSIBLE.
2. INSTALL AIR RELIEF VALVE AT HIGHEST POINT.
3. NORMAL SPACING WITHIN THE TOP ⅔ OF SLOPE,
4. INSTALL DRIPLINE AT 25% GREATER SPACING AT THE BOTTOM ⅓ OF THE SLOPE.
5. WHEN ELEVATION CHANGE IS 10 FT OR MORE, ZONE THE BOTTOM ⅓ ON A SEPARATE VALVE.

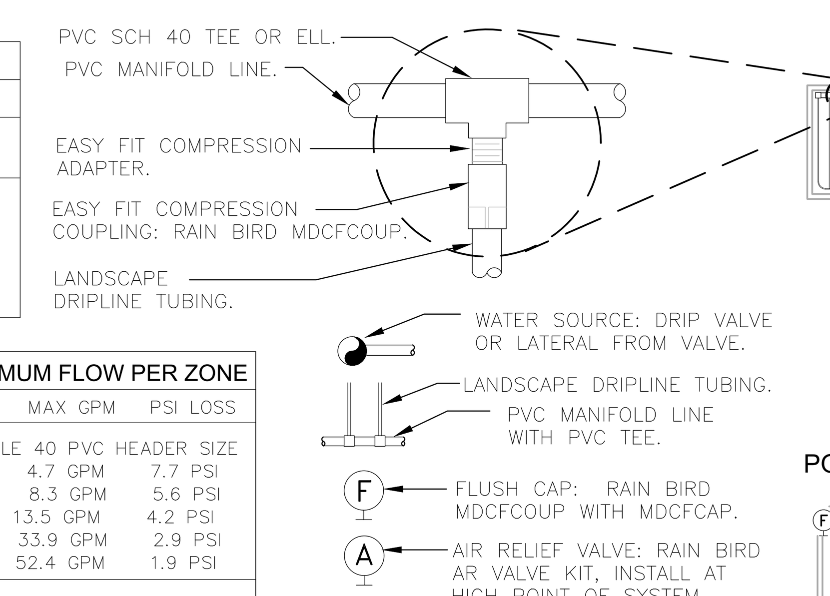

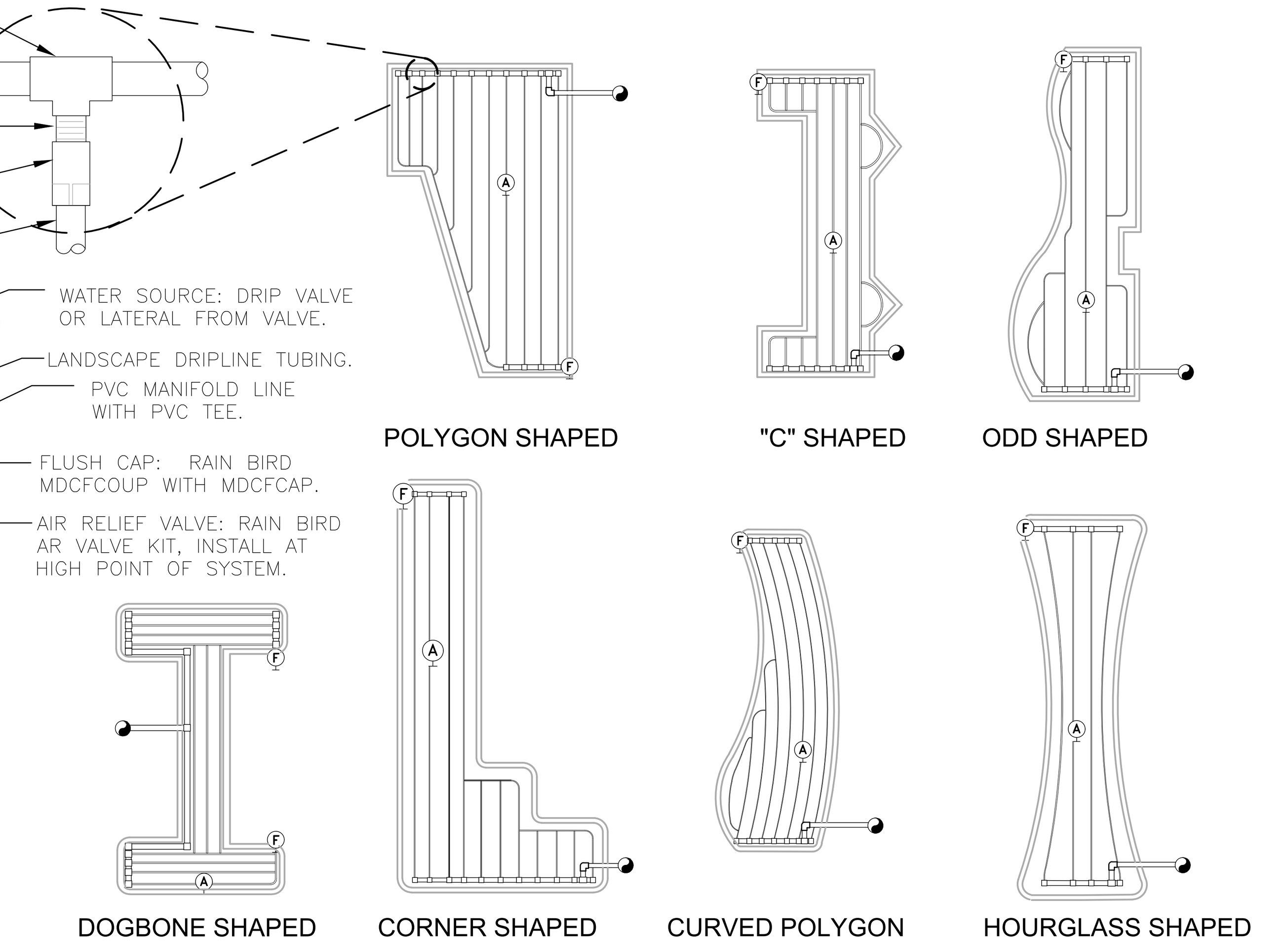

EFFLUENT WATER
WHEN A SITE IS USING NON-POTABLE OR EFFLUENT WATER AS IRRIGATION WATER, THE IRRIGATION SYSTEM SHALL BE INSTALLED USING THE INDUSTRY STANDARD PURPLE COLOR INDICATORS MARKED ON ALL PIPES, CONTROL VALVES, QUICK COUPLERS AND SPRINKLER HEADS TO PREVENT ACCIDENTAL DRINKING OF WATER.

10 TYPICAL RAIN BIRD DRIPLINE REQUIREMENTS

N.T.S. SITEBBQ-DG-151

TENNESSEE STATE PLANE COORDINATE SYSTEM, ZONE 5301, FIPSZONE 4100; NAD 83 DATUM

LOSE DESIGN SPACES FOR LIFE.

THIS DRAWING AND THE DESIGN SHOWN IS THE PROPERTY OF THE ARCHITECT. REPRODUCTION, COPYING, OR USE OF THIS DRAWING WITHOUT THEIR WRITTEN CONSENT IS PROHIBITED, AND ANY INFRINGEMENT IS SUBJECT TO LEGAL ACTION.

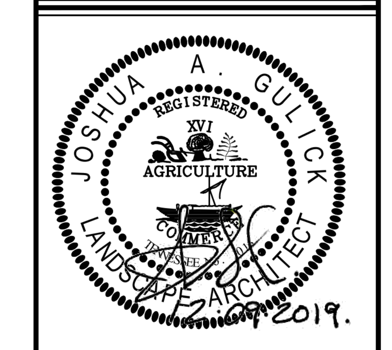

FREEDOM BALL FIELDS
C.O.F. AND F.S.S.D. BALL FIELD CONSTRUCTION
COF PROJECT #7139

CITY OF FRANKLIN
TENNESSEE
FRANKLIN

SUBMITTALS / REVISIONS

NO.	DATE	DESCRIPTION
1	07.24.2020	MATERIALS, GATE SIZE, IRRIGATION

SHEET TITLE
IRRIGATION DETAILS

PROJECT NO. 18062-1	DATE 05/08/2020
DRAWN BY JS	SCALE AS SHOWN
CHECKED BY JS	

SHEET NO. L2.12 (1)

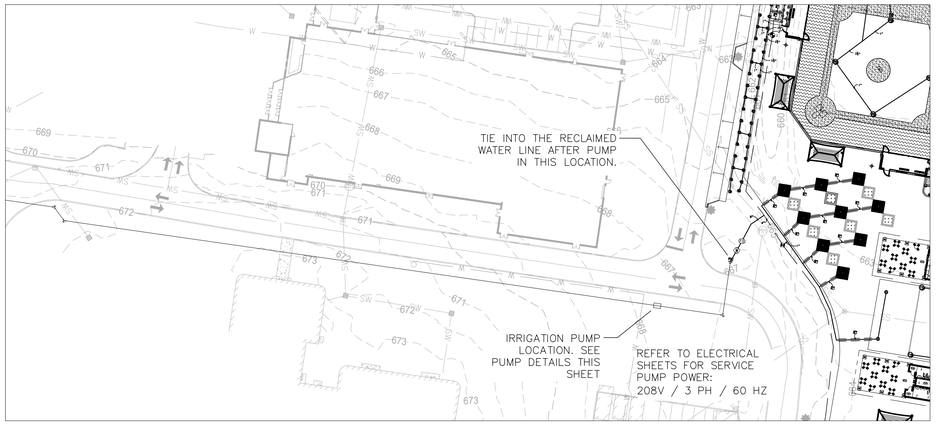

1 IRRIGATION POINT OF CONNECTION

N.T.S.

SEE SHEET C5.02 FOR IRRIGATION SERVICE PLAN AND PROFILE

Globe and Angle Main Valve Dimensions

DIM	FULL PORT	VALVE SIZE INCHES (mm)					
		1 1/4 (32)	1 1/2(38)	2 (50)	2 1/2 (65)	3 (80)	4 (100)
A	Threaded	7 1/4	7 1/4	9 7/16	11	12 1/2	
	Class 150 Flange		8 1/2	9 3/8	11	12	15
	Class 300 Flange		9	10	11 5/8	13 1/4	15 5/8
	Grooved		8 1/2	9	11	12 1/2	15
B	Diameter	5 5/8	5 5/8	6 3/4	8	9 3/16	11 11/16
C	Max.	5 3/4	5 3/4	6 3/16	7 3/8	8	10 3/16
D	Threaded/Grooved	1 3/8	1 3/8	1 3/4	2 1/8	2 9/16	3 7/16
	Class 150 Flange		2 1/2	3	3 1/2	3 3/4	4 1/2
	Class 300 Flange		3	3 1/4	3 3/4	4 1/8	5
E	NPT Body Tap	3/8	3/8	3/8	1/2	1/2	3/4
F	NPT Cvr. Plug Tap	1/2	1/2	1/2	1/2	1/2	3/4
G	NPT Cover Tap	3/8	3/8	3/8	1/2	1/2	3/4
H	Threaded	3 1/4	3 1/4	4 3/4	5 1/2	6 1/4	
	Class 150 Flange		4	4 3/4	5 1/2	6	7 1/2
	Class 300 Flange		4 1/4	5	6	6 7/16	8
	Grooved		4 7/16	4 3/4	5 1/2	6	7 1/2
J	Threaded	1 15/16	1 15/16	3 1/4	4	4 1/2	
	Class 150 Flange		4	3 1/4	4	4	5
	Class 300 Flange		4 1/4	3 1/2	4 5/16	4 7/16	5 5/16
	Grooved		3 3/16	3 1/4	4	4 1/4	5
Valve Stem Internal Thread		10-32	10-32	10-32	10-32	1/4-20	1/4-20
Stem Travel (±)		7/16	7/16	3/4	7/8	1	1 3/16
Approx. Wt. (lbs)		22	26	36	55	70	130

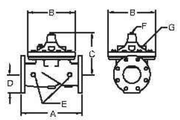

Globe Style Body

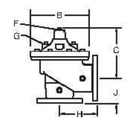

Angle Style Body

EFFLUENT WATER
WHEN A SITE IS USING NON-POTABLE OR EFFLUENT WATER AS IRRIGATION WATER, THE IRRIGATION SYSTEM SHALL BE INSTALLED USING THE INDUSTRY STANDARD PURPLE COLOR INDICATORS MARKED ON ALL PIPES, CONTROL VALVES, QUICK COUPLERS AND SPRINKLER HEADS TO PREVENT ACCIDENTAL DRINKING OF WATER.

2 2.5" ZURN PRESSURE REGULATOR VALVE

1 1/2" = 1'-0"

MODEL # 212-ZW209BP

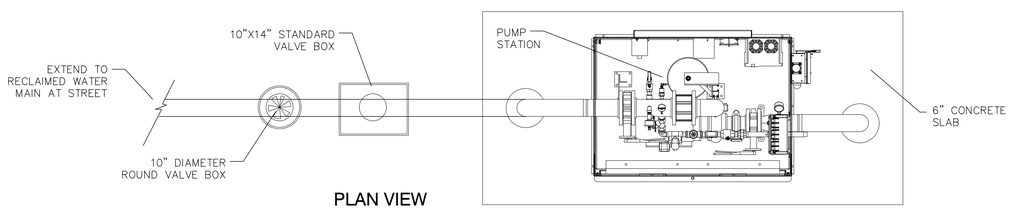

PLAN VIEW

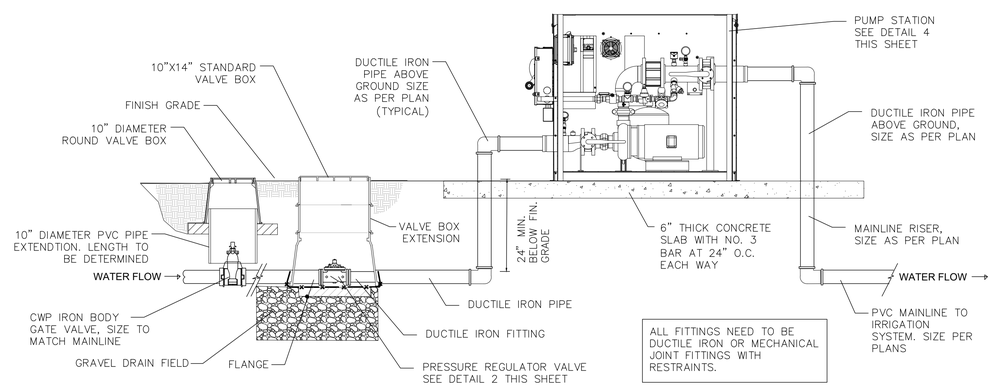

ALL FITTINGS NEED TO BE DUCTILE IRON OR MECHANICAL JOINT FITTINGS WITH RESTRAINTS.

ELEVATION

3 PRESSURE REGULATOR WITH PUMP STATION

NTS

INSTALL PER MANUFACTURERS SPECIFICATIONS AND RECOMMENDATIONS.

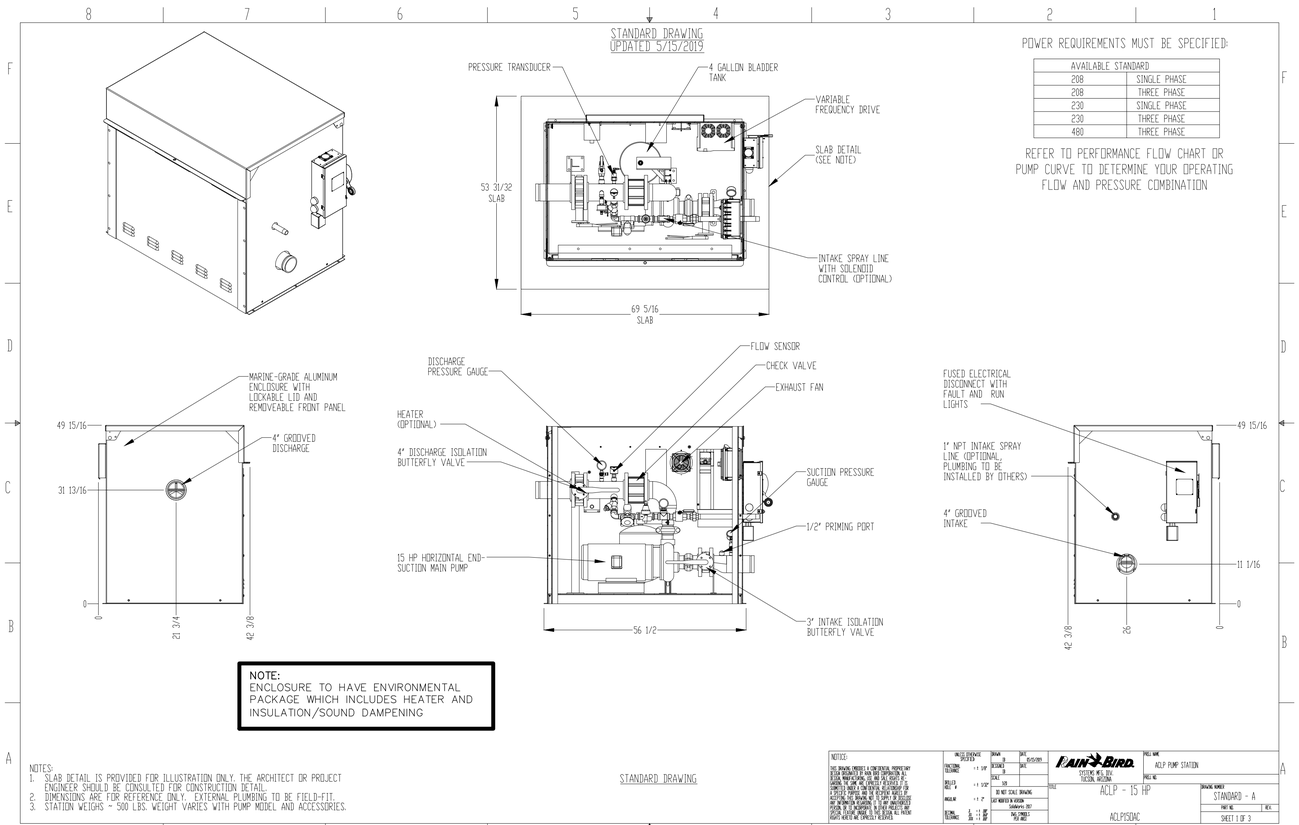

4 IRRIGATION PUMP STATION

NTS

PUMP STATION NOTES
THE PUMPING STATION ON THIS PROJECT HAS BEEN ENGINEERED SPECIFICALLY FOR THE GPM DEMAND AND THE PRESSURE NECESSARY TO SUPPLY THE IRRIGATION SYSTEM REQUIREMENTS. THE CONTRACTOR SHALL INSTALL THIS PUMPING STATION AS SHOWN ON THE PLANS, SPECIFICATIONS AND DETAIL SHEETS. IF THE CONTRACTOR MODIFIES, ALTERS OR OTHERWISE CHANGES THIS PUMP STATION IN ANY WAY, OR ANY PART OF IT, OR SUBSTITUTES THE MANUFACTURER OF THIS SPECIFIED PUMP STATION WITHOUT "WRITTEN CONSENT"& AUTHORIZATION OF THE LANDSCAPE ARCHITECT, AND/OR THE PROJECT OWNER, PRIOR TO FINAL PAYMENT THE CONTRACTOR WILL REMOVE AND REPLACE THE PUMPING STATION WITH THE PUMP THAT WAS SPECIFIED ON THESE PLANS, AT HIS EXPENSE AND AT NO ADDITIONAL COST TO THE OWNER.

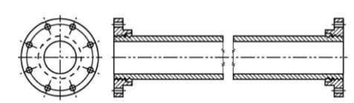

Flange and Flange

Size (in.)	Pressure[1] Rating (psi)	Nominal Wall Thickness (in.)	Pipe OD (in.)	Minimum Length[2] (in.)	Maximum Length[2] (ft.-in.)
4	350[3]	0.32	4.80	4 1/2	20'-0"
6	350[3]	0.34	6.90	4 1/2	20'-0"

5 FLANGED JOINT PIPE

NTS

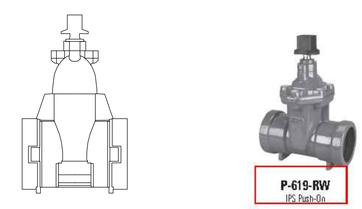

GATE VALVE – DUCTILE IRON, IRRIGATION, PVC ENDS
PCR-619-RW

- 250 PSI/17.2 BAR NON-SHOCK COLD WORKING PRESSURE, MAXIMUM OPERATING TEMPERATURE OF 160°F/71°C, NON-RISING STEM, BOLTED BONNET, RESILIENT WEDGE, FUSION BONDED EPOXY COATED BODY (NSF AND FDA CERTIFIED), PVC PUSH-ON END CONNECTION X FLANGED
- MEETS OR EXCEEDS PERFORMANCE REQUIREMENTS OF AWWA C509 AND C515 FOR 3" AND LARGER VALVES
- SIZE RANGE 4" TO 12"

6 250 PSI CWP IRON BODY GATE VALVE

NTS

GENERAL IRRIGATION NOTES:

1. UNDERGROUND UTILITIES;
   A. UNDERGROUND UTILITIES HAVE NOT BEEN VERIFIED BY THE OWNER, LANDSCAPE ARCHITECT, OR THEIR REPRESENTATIVES. BEFORE YOU DIG CALL 811.
   B. THE CONTRACTOR SHALL DETERMINE THE EXACT LOCATION OF ALL EXISTING UTILITIES BEFORE COMMENCING WORK AND AGREES TO BE RESPONSIBLE FOR ANY AND ALL DAMAGES WHICH MIGHT RESULT FROM THE CONTRACTOR'S FAILURE TO EXACTLY LOCATE AND PRESERVE ANY UNDERGROUND UTILITIES TO REMAIN.

2. THE CONTRACTOR SHALL VERIFY EXISTING CONDITIONS TO INSURE THAT THE NEW WORK SHALL FIT INTO THE EXISTING SITE IN THE MANNER INTENDED AND AS SHOWN ON THE DRAWINGS. SHOULD ANY CONDITIONS EXIST THAT ARE CONTRARY TO THOSE ON THE DRAWINGS, THE CONTRACTOR SHALL NOTIFY THE OWNER'S REPRESENTATIVE PRIOR TO PERFORMING ANY WORK IN THE AREA INVOLVING DIFFERENCES. NOTIFICATION SHALL BE MADE IN THE FORM OF A DRAWING OR SKETCH INDICATING FIELD MEASUREMENTS AND NOTES RELATING TO THE AREA.

TENNESSEE STATE PLANE COORDINATE SYSTEM, ZONE 5301, FIPSZONE 4100; NAD 83 DATUM

LOSE DESIGN
SPACES FOR LIFE.

THIS DRAWING AND THE DESIGN SHOWN IS THE PROPERTY OF THE ARCHITECT. REPRODUCTION, COPYING, OR USE OF THIS DRAWING WITHOUT THEIR WRITTEN CONSENT IS PROHIBITED, AND ANY INFRINGEMENT IS SUBJECT TO LEGAL ACTION.

JOSHUA A. GULLICK REGISTERED AGRICULTURE LANDSCAPE ARCHITECT 19 2019.

FREEDOM BALL FIELDS
C.O.F. AND F.S.S.D. BALL FIELD CONSTRUCTION
COF PROJECT #7139

CITY OF FRANKLIN
FRANKLIN
TENNESSEE

SUBMITTALS / REVISIONS

NO.	DATE	DESCRIPTION
1	07.24.2020	MATERIALS, GATE SIZE, IRRIGATION

SHEET TITLE
IRRIGATION PUMP DETAILS

PROJECT NO. 18062-1	DATE 05/08/2020
DRAWN BY JS	SCALE AS SHOWN
CHECKED BY JS	
SHEET NO. L2.13	1

N:\2018\18062-P_FSSD_Ball_Field_CONCAD\01_SHEETS\18062-1_L2.00_IRRIGATION_SERIES.dwg - Printed on 2020-07-24 at 7:02:09 AM

SECTION 26 56 68 – EXTERIOR ATHLETIC LIGHTING

Lighting System with LED Light Source

PART 1 – GENERAL

1.1 SUMMARY

A. Work covered by this section of the specifications shall conform to the contract documents, engineering plans as well as state and local codes.

B. The purpose of these specifications is to define the lighting system performance and design standards for Freedom Ballfields in Franklin, TN using an LED Lighting source. The manufacturer / contractor shall supply lighting equipment to meet or exceed the standards set forth in these specifications.

C. The sports lighting will be for the following venues:

1. Baseball Field
2. Softball Field

D. The primary goals of this sports lighting project are:

1. Guaranteed Light Levels: Selection of appropriate light levels impact the safety of the players and the enjoyment of spectators. Therefore light levels are guaranteed to not drop below specified target values for a period of 25 years.
2. Environmental Light Control: It is the primary goal of this project to minimize spill light to adjoining properties and glare to the players, spectators and neighbors.
3. Cost of Ownership: In order to reduce the operating budget, the preferred lighting system shall be energy efficient and cost effective to operate. All maintenance costs shall be eliminated for the duration of the warranty.
4. Control and Monitoring: To allow for optimized use of labor resources and avoid unneeded operation of the facility, customer requires a remote on/off control system for the lighting system. Fields should be proactively monitored to detect luminaire outages over a 25-year life cycle. All communication and monitoring costs for 25-year period shall be included in the bid.

1.2 LIGHTING PERFORMANCE

A. Illumination Levels and Design Factors: Playing surfaces shall be lit to an average target illumination level and uniformity as specified in the chart below. Lighting calculations shall be developed and field measurements taken on the grid spacing with the minimum number of grid points specified below. Appropriate light loss factors shall be applied and submitted for the basis of design. Average illumination level shall be measured in accordance with the IESNA LM-5-04 (IESNA Guide for Photometric Measurements of Area and Sports Lighting Installations). Illumination levels shall not to drop below desired target values in accordance to IES RP-6-15, Page 2, Maintained Average Illuminance and shall be guaranteed for the full warranty period.

Area of Lighting	Average Target Illumination Levels	Maximum to Minimum Uniformity Ratio	Grid Points	Grid Spacing
Baseball Infield	50	2:1	25	30’x30’
Baseball Outfield	30	2.5:1	89	30’x30’
Softball Infield	50	2:1	25	20’x20’
Softball Outfield	30	2.5:1	71	20’x20’

B. Color: The lighting system shall have a minimum color temperature of 5700K and a CRI of 75.

C. Mounting Heights: To ensure proper aiming angles for reduced glare and to provide better playability, minimum mounting heights shall be as described below. Higher mounting heights may be required based on photometric report and ability to ensure the top of the field angle is a minimum of 10 degrees below horizontal.

# of Poles	Pole Designation	Pole Height
2	A3, A4	60’
6	A1,A2,B3,B4,C1,C2	70’
2	B1,B2	80’

1.3 ENVIRONMENTAL LIGHT CONTROL

A. Light Control Luminaires: All luminaires shall utilize spill light and glare control devices including, but not limited to, internal shields, louvers and external shields. No symmetrical beam patterns are accepted.

B. The first page of a photometric report for all luminaire types proposed showing horizontal and vertical axial candle power shall be provided to demonstrate the capability of achieving the specified performance. Reports shall be certified by a qualified testing laboratory with a minimum of five years experience or by a manufacturer’s laboratory with a current accreditation under the National Voluntary Laboratory Accreditation Program for Energy Efficient Lighting Products. A summary of the horizontal and vertical aiming angles for each luminaire shall be included with the photometric report.

1.4 Cost of Ownership

A. Manufacturer shall submit a 25 year Cost of Ownership summary that includes energy consumption, anticipated maintenance costs, and control costs. All costs associated with faulty luminaire replacement - equipment rentals, removal and installation labor, and shipping - are to be included in the maintenance costs.

PART 2 – PRODUCT

2.2 SPORTS LIGHTING SYSTEM CONSTRUCTION

A. Manufacturing Requirements: All components shall be designed and manufactured as a system. All luminaires, wire harnesses, drivers and other enclosures shall be factory assembled, aimed, wired and tested.

B. Durability: All exposed components shall be constructed of corrosion resistant material and/or coated to help prevent corrosion. All exposed carbon steel shall be hot dip galvanized per ASTM A123. All exposed aluminum shall be powder coated with high performance polyester or anodized. All exterior reflective inserts shall be anodized, coated, and protected from direct environmental exposure to prevent reflective degradation or corrosion. All exposed hardware and fasteners shall be stainless steel of 18-8 grade or better, passivated and coated with aluminum-based thermosetting epoxy resin for protection against corrosion and stress corrosion cracking. Structural fasteners may be carbon steel and galvanized meeting ASTM A153 and ISO/EN 1461 (for hot dipped galvanizing), or ASTM B695 (for mechanical galvanizing). All wiring shall be enclosed within the cross-arms, pole, or electrical components enclosure.

C. System Description: Lighting system shall consist of the following:

1. Galvanized steel poles and cross-arm assemblies.
2. Non-approved pole technology:
   a. Square static cast concrete poles will not be accepted.

b. Direct bury steel poles which utilize the extended portion of the steel shaft for their foundation will not be accepted due to potential for internal and external corrosive reaction to the soils and long term performance concerns.

3. Lighting systems shall use concrete foundations. See Section 2.4 for details.

   a. For a foundation using a pre-stressed concrete base embedded in concrete backfill the concrete shall be air-entrained and have a minimum compressive design strength at 28 days of 3,000 PSI. 3,000 PSI concrete specified for early pole erection, actual required minimum allowable concrete strength is 1,000 PSI. All piers and concrete backfill must bear on and against firm undisturbed soil.

   b. For anchor bolt foundations or foundations using a pre-stressed concrete base in a suspended pier or re-inforced pier design pole erection may occur after 7 days. Or after a concrete sample from the same batch achieves a certain strength.

4. Manufacturer will supply all drivers and supporting electrical equipment

   a. Remote drivers and supporting electrical equipment shall be mounted approximately 10 feet above grade in aluminum enclosures. The enclosures shall be touch-safe and include drivers and fusing with indicator lights on fuses to notify when a fuse is to be replaced for each luminaire. Disconnect per circuit for each pole structure will be located in the enclosure. Integral drivers are not allowed.

   b. Manufacturer shall provide surge protection at the pole equal to or greater than 40 kA for each line to ground (Common Mode) as recommended by IEEE C62.41.2_2002.

5. Wire harness complete with an abrasion protection sleeve, strain relief and plug-in connections for fast, trouble-free installation.

6. All luminaires, visors, and cross-arm assemblies shall withstand 150 mph winds and maintain luminaire aiming alignment.

8. Contactor cabinet to provide on-off control.

9. Manufacturer shall provide lightning grounding as defined by NFPA 780 and be UL Listed per UL 96 and UL 96A.

   a. Integrated grounding via concrete encased electrode grounding system.

   b. If grounding is not integrated into the structure, the manufacturer shall supply grounding electrodes, copper down conductors, and exothermic weld kits. Electrodes and conductors shall be sized as required by NFPA 780.The grounding electrode shall be minimum size of 5/8 inch diameter and 8 feet long, with a minimum of 10 feet embedment. Grounding electrode shall be connected to the structure by a grounding electrode conductor with a minimum size of 2 AWG for poles with 75 feet mounting height or less, and 2/0 AWG for poles with more than 75 feet mounting height.

D. Safety: All system components shall be UL listed for the appropriate application.

2.2 ELECTRICAL

A. Electric Power Requirements for the Sports Lighting Equipment:
   1. Electric power: 208 Volt, 3 Phase
   2. Maximum total voltage drop: Voltage drop to the disconnect switch located on the poles shall not exceed three (3) percent of the rated voltage.

B. Energy Consumption: The kW consumption for the field lighting system shall be 44.12 kW for the Baseball Field and 18.68 kW for the Softball Field.

2.3 CONTROL

A. Instant On/Off Capabilities: System shall provide for instant on/off of luminaires.

B. Lighting contactor cabinet(s) constructed of NEMA Type 4 aluminum, designed for easy installation with contactors, labeled to match field diagrams and electrical design. Manual off-on-auto selector switches shall be provided.

C. Dimming: System shall provide for 3-stage dimming (high-medium-low). Dimming with be set via scheduling options (Website, app, phone, fax, email).

D. Remote Lighting Control System: System shall allow owner and users with a security code to schedule on/off system operation via a web site, phone, fax or email up to ten years in advance. Manufacturer shall provide and maintain a two-way TCP/IP communication link. Trained staff shall be available 24/7 to provide scheduling support and assist with reporting needs.

The owner may assign various security levels to schedulers by function and/or fields. This function must be flexible to allow a range of privileges such as full scheduling capabilities for all fields to only having permission to execute "early off" commands by phone. Scheduling tool shall be capable of setting curfew limits.

Controller shall accept and store 7-day schedules, be protected against memory loss during power outages, and shall reboot once power is regained and execute any commands that would have occurred during outage.

E. Remote Monitoring System: System shall monitor lighting performance and notify manufacturer if individual luminaire outage is detected so that appropriate maintenance can be scheduled. The controller shall determine switch position (manual or auto) and contactor status (open or closed).

F. Management Tools: Manufacturer shall provide a web-based database and dashboard tool of actual field usage and provide reports by facility and user group. Dashboard shall also show current status of luminaire outages, control operation and service. Mobile application will be provided suitable for IOS, Android and Blackberry devices.

Hours of Usage: Manufacturer shall provide a means of tracking actual hours of usage for the field lighting system that is readily accessible to the owner.

1. Cumulative hours: shall be tracked to show the total hours used by the facility

G. Communication Costs: Manufacturer shall include communication costs for operating the control and monitoring system for a period of 25 years.

H. Communication with luminaire drivers: Control system shall interface with drivers in electrical components enclosures by means of powerline communication.

2.4 STRUCTURAL PARAMETERS

A. Wind Loads: Wind loads shall be based on the 2012 International Building Code. Wind loads to be calculated using ASCE 7-10, an ultimate design wind speed of 115.

B. Pole Structural Design: The stress analysis and safety factor of the poles shall conform to 2013 AASHTO Standard Specification for Structural Supports for Highway Signs, Luminaires, and Traffic Signals (LTS-6).

C. Foundation Design: The foundation design shall be based on soils that meet or exceed those of a Class 5 material as defined by 2015 IBC Table 1806.2.

C. Foundation Drawings: Project specific foundation drawings stamped by a registered engineer in the state where the project is located are required. The foundation drawings must list the moment, shear (horizontal) force, and axial (vertical) force at ground level for each pole. These drawings must be submitted at time of bid to allow for accurate pricing.

PART 3 – EXECUTION

3.1 SOIL QUALITY CONTROL

A. It shall be the Contractor's responsibility to notify the Owner if soil conditions exist other than those on which the foundation design is based, or if the soil cannot be readily excavated. Contractor may issue a change order request / estimate for the Owner's approval / payment for additional costs associated with:

1. Providing engineered foundation embedment design by a registered engineer in the State of TN for soils other than specified soil conditions;
2. Additional materials required to achieve alternate foundation;
3. Excavation and removal of materials other than normal soils, such as rock, caliche, etc.

3.2 DELIVERY TIMING

A. Delivery Timing Equipment On-Site: The equipment must be on-site 6-8 weeks from receipt of approved submittals and receipt of complete order information.

3.3 FIELD QUALITY CONTROL

A. Illumination Measurements: Upon substantial completion of the project and in the presence of the Contractor, Project Engineer, Owner's Representative, and Manufacturer's Representative, illumination measurements shall be taken and verified. The illumination measurements shall be conducted in accordance with IESNA LM-5-04.

B. Field Light Level Accountability

1. Light levels are guaranteed not to fall below the target maintained light levels for the entire warranty period of 25 years. These levels will be specifically stated as “guaranteed” on the illumination summary provided by the manufacturer.
2. The contractor/manufacturer shall be responsible for conducting initial light level testing and an additional inspection of the system, in the presence of the owner, one year from the date of commissioning of the lighting.
3. The contractor/manufacturer will be held responsible for any and all changes needed to bring these fields back to compliance for light levels and uniformities. Contractor/Manufacturer will be held responsible for any damage to the fields during these repairs.

C. Correcting Non-Conformance: If, in the opinion of the Owner or his appointed Representative, the actual performance levels including footcandles and uniformity ratios are not in conformance with the requirements of the performance specifications and submitted information, the Manufacturer shall be required to make adjustments to meet specifications and satisfy Owner.

3.4 WARRANTY AND GUARANTEE

A. 25-Year Warranty: Each manufacturer shall supply a signed warranty covering the entire system for 25 years from the date of shipment. Warranty shall guarantee specified light levels. Manufacturer shall maintain specifically-funded financial reserves to assure fulfillment of the warranty for the full term. Warranty does not cover weather conditions events such as lightning or hail damage, improper installation, vandalism or abuse, unauthorized repairs or alterations, or product made by other manufacturers.

B. Maintenance: Manufacturer shall monitor the performance of the lighting system, including on/off status, hours of usage and luminaire outage for 25 years from the date of equipment shipment. Parts and labor shall be covered such that individual luminaire outages will be repaired when the usage of any field is materially impacted. Manufacturer is responsible for removal and replacement of failed luminaires, including all parts, labor, shipping, and equipment rental associated with maintenance. Owner agrees to check fuses in the event of a luminaire outage.

PART 4 – DESIGN APPROVAL

4.0 PRE-BID SUBMITTAL REQUIREMENTS

A. Approved Product: Musco’s Light-Structure System™ with TLC for LED™ is the approved product.

PRE-BID MEETING MINUTES

Meeting on: July 16, 2020 – 1:00 pm
City Contract Number: COF 2020-0173
Meeting Location: Virtual WebEx Meeting
Meeting Intention: Non Mandatory Pre-Bid Meeting

AGENDA – Freedom Ball Fields – (Franklin, Tennessee)

Project Overview

Work included within the Project Scope shall consist of all material outlined within the Contract Documents, Project Manual, Construction Drawings, and subsequent addenda. The overall project generally includes, but is not limited to construction of:

- Pre-Engineered Batting Cage Structures
- Concession and Storage Structure
- Restroom and Storage Structure
- Scoring Structures
- Retaining Walls
- Netting, backstop walls and net structure, chain link fences and gates
- Dug-out Structures
- Concrete sidewalks and curbs
- Concrete seat walls
- Artificial turf surfacing
- Laser grading and sports field installation
- Grading, vegetation clearing, and erosion control
- Curbs, striping, asphalt
- Drainage pipe, catch basins, inlets, concrete headwalls etc.
- Traffic safety plan and implementation
- Striping and signage
- Sports lighting and electrical service
- Water, Irrigation, Electrical, Sewer and Cable / Internet utility services
- Other items necessary for completion of work.

Sport Field Contractor

General Contractors are expected to provide a pre-qualified sports field contractor to perform construction of irrigation, ball fields, and grow-in. The City only received one submittal for prequalification. Per City procurement policies, we are required to obtain prequalification from multiple contractors prior to bidding. The City has elected to extend the prequalification deadline and further instructions will be issued in an addendum to provide additional time for the prequalification of sports field contractors. The General Contractor is responsible for coordinating scope of work for GC, SFC and all subcontractors prior to bid. The only current prequalified sports field contractor is listed below:

Sports Turf Solutions
Ryan Moriarity
606 St. Blaise Road

Gallatin, TN 37066 615.566.9799 ryan@sportsturfconstruction.com

Miscellaneous Contract Requirements

- Hours of Work: regular working hours are M-F 7AM-6PM. Contractor shall not perform work on Saturdays, Sundays or any Legal Holidays without prior approval from the City of Franklin.
- SP Utility Record Drawings
  - Requires a Professional Surveyor, licensed in the State of Tennessee, to provide the City with Record Drawings.
  - Survey includes public and private stormwater facilities, street/school/park lighting, public and private water record drawings, public and private sanitary sewer record drawings, public and private reclaimed water record drawings and public and private electrical, phone, cable, fiber optics record drawings.
- SP Franklin Special Board of Education Policy Manual. Contractor shall review the manual. Highlights listed below:
  - Tobacco-Free School
  - Alcohol and Drug-free Workplace
  - GC shall be responsible for completing background investigations of all employees prior to working on the site. GC shall be responsible for maintaining this paperwork and allow the City/FSSD to review all documents within 24 hours of request. Employees with a criminal background shall not be allowed onsite without prior approval from the City/FSSD.
  - Possession of firearms on school grounds shall be strictly prohibited.
- General Contractor shall coordinate with FSSD and on-site contractors working on adjacent projects to facilitate a traffic and construction traffic management plan. Below is a summary of the expectations:
  - The General Contractor shall accommodate normal circulation of the site M-F 7AM-6PM and during any special events or school functions.
  - Utility crossing and disruption to the circulation will be allowed outside of normal school hours and/or special school events. The General Contractor shall coordinate this with the City and FSSD. Utility crossing that disrupt the circulation of flow shall be immediately backfilled or plated as needed to accommodate traffic flow.
  - FSSD and the City are working to identified a staging area for equipment, materials and employee parking during the construction phase. This area will be identified and sent out via a formal addendum.
- General Contractor shall be responsible for cleanliness of the roads and site. It is expected to be kept in a clean and safe condition throughout length of project.

Bid Package

Bidding documents and plans may be purchased from City of Franklin Engineering front desk upon payment of one hundred dollars ($100.00). Make checks payable to City of Franklin, TN Plan holders must register by purchasing plans.

Bid Submittal / Date

Sealed Bids are due on Friday, August 07, 2020, by 1:00 PM, local time. Bids are to be submitted to the City of Franklin, City Hall, Attn: Shahad Abdulrahman, 109 3rd Avenue South, Franklin, Tennessee 37064, and at that time the bids will be publicly opened. The following documents shall be submitted:

- Bids shall be submitted in a sealed envelope, containing the vendors bid, and contain on the face of the envelope the word “Bid”, the name of the Project, Bidder’s Name, license number,

expiration date thereof, and license classification in accordance with State Law, and the Time and Date of the Bid Opening shall also appear on the envelope.

- Envelopes must contain the original Bid Book
- Bidders shall acknowledge all addenda
- The following forms shall be completed:
  - Statement of License Certificate
  - Drug Free Workplace Affidavit
  - Bid security, properly executed on the form provided or a Certified Check or Cashier's Check drawn on a National or Tennessee Bank in the amount of 5% of the Total Bid Price.

Bid Formats

This project is being bid as a Lump Sum Bid. The bid award will be based on adherence to contract documents, familiarity with type of work, and best value to the City of Franklin. The Bid shall be awarded based on the Total Base Bid Price and not the Deduct Alternate.

Construction Schedule

Following award of the Bid, the City of Franklin will issue a notice to proceed as soon as all contract documents are properly executed.

Below is a summary of the Contract Deadlines, LD's and Bonus:

Contract Deadlines

Substantial Completion:	365 days
Final Completion:	30 days after Substantial Completion
Millstones 1:	The Baseball and Softball Fields, including a fully functional irrigation system, dugouts, fencing gates, poles, lighting, curbing, and all work necessary to allow final planting and sprigging of the fields by July 1st, 2021 with no possibility of time extensions.

Liquidated Damages and Bonus

$1,000 for each day for Substantial Completion Deadline
$1,000 for each day for Completion of Remaining Work
$1,000 for each day for Milestones

Bonus

$1,000 for each day prior to Substantial Completion Deadline. The maximum value of the bonus shall be limited to $62,000.

Site Observation

The City of Franklin will provide construction administration services during the project with limited construction administration support from Lose Design.

Permits

All plans have been approved by the City of Franklin and State of TN. The General Contractor shall be responsible for finalizing the permit applications to include the COF Building Permit, COF Stormwater and Grading Permit, TDEC NOC and payment of all fees. Permit fees will be paid by the Contractor through the permit fee allowance line item and be reimbursed based on exact cost paid by the Contractor. No markup, overhead or profit will be allowed in this line item.

Anticipated Addendums

- Non-mandatory pre-bid meeting minutes
- Revisions associated with the pre-qualification deadline for Sports Field Contractors
- List of Prequalified Sports Field Contractors
- COF and FSSD will identify a storage and staging area for the contractor
- Form 00410 – Bid Form for Construction Contracts was not included in the bid book and will be issued via addendum prior to the bid date
- Plan revisions as needed
- General Contractor Questions / Answers

Bid Questions

All questions pertaining to the bidding instruments shall be submitted in writing to City of Franklin, Attn: Shahad Abdulrahman by email at shahad.abdulrahman@franklintn.gov. Only responses set forth in an Addendum will be binding. Oral and other interpretations or clarifications will be without legal effect. Responses to questions are not part of the Contract Documents unless set forth in an Addendum that expressly modifies or supplements the Contract Documents.