Index Of Sheets

SEE SHEET NO. 1A

CITY OF FRANKLIN	YEAR	SHEET NO.
	2020	1
CITY OF FRANKLIN PROJ. NO.	COF#2019-0098	

HISTORIC FRANKLIN TENNESSEE

CITY OF FRANKLIN, TENNESSEE

WILLIAMSON COUNTY

CAROTHERS PARKWAY / SOUTHEAST MUNICIPAL COMPLEX
CAROTHERS PARKWAY WIDENING AND SOUTHEAST MUNICIPAL COMPLEX ENTRANCE

CONSTRUCTION

benesch
8 CADILLAC DRIVE, SUITE 250
BRENTWOOD, TN 37027 PHONE: 615.370.6079
FAX: 615.627.4066 www.benesch.com

BRIAN A. RALSTIN REGISTERED ENGINEER XVI AGRICULTURE COMMERCE No. 119683 STATE OF TENNESSEE 9/18/2020

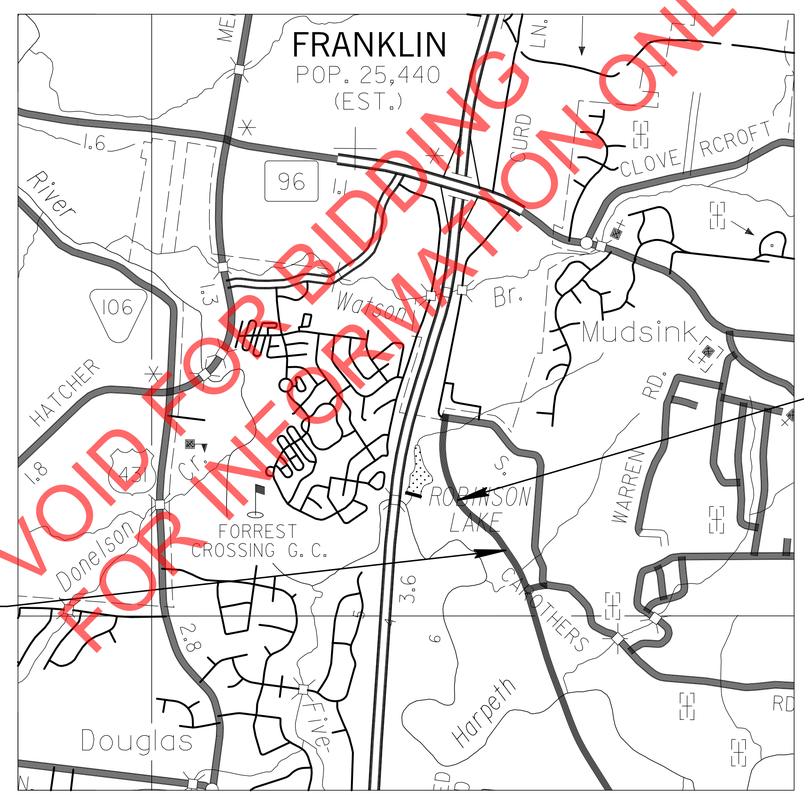

N

END PROJECT: COF #2019-0098
STA. 320+29.35
N 568354.1914
E 1724389.3473

BEGIN PROJECT: COF #2019-0098
STA. 302+24.22
N 567061.6913
E 1725628.1532

0 2000 4000
SCALE: 1"= 2000'

SPECIAL NOTES

PROPOSALS MAY BE REJECTED BY THE CITY OF FRANKLIN IF ANY OF THE UNIT PRICES CONTAINED THEREIN ARE OBVIOUSLY UNBALANCED, EITHER EXCESSIVE OR BELOW THE REASONABLE COST ANALYSIS VALUE.

THIS PROJECT TO BE CONSTRUCTED UNDER THE STANDARD SPECIFICATIONS OF THE TENNESSEE DEPARTMENT OF TRANSPORTATION DATED JANUARY 1, 2015 AND ADDITIONAL SPECIFICATIONS AND SPECIAL PROVISIONS CONTAINED IN THE PLANS AND IN THE PROPOSAL CONTRACT

CITY OF FRANKLIN ENGINEERING DEPARTMENT PAUL HOLZEN, P.E.
DIRECTOR OF ENGINEERING

DESIGNED BY ALFRED BENESCH & COMPANY

DESIGNER BRIAN RALSTIN, PE

ROADWAY LENGTH 0.383 MILES

APPROVED: Paul P Holzen
PAUL HOLZEN, P.E. DATE
DIRECTOR / CITY ENGINEER

9/21/2020 8:38:20 AM
Y:\nashville\16019000S\16019033.00\Eng_Docs\Roadway\001 Title_CONST.sht

TYPE	YEAR	PROJECT NO.	SHEET NO.
CONST.	2020	COF# 2019-0098	1A

ROADWAY INDEX

SHEET NAME	SHEET NO.
TITLE SHEET	1
ROADWAY INDEX AND STANDARD ROADWAY DRAWINGS	1A
ESTIMATED PROJECT QUANTITIES	2, 2-1, 2-2
TYPICAL SECTIONS AND PAVEMENT SCHEDULE	2B – 2B2
GENERAL NOTES	2C, 2C1
TABULATED QUANTITIES	2D, 2E
UTILITY NOTES and UTILITY OWNERS	3
PRESENT LAYOUT(S)	4 – 6
PROPOSED LAYOUT(S)	4A – 6A
PROFILE	4B,4C,5B,6B,6D,6E
DRAINAGE LAYOUT(S)	4D, 5C, 6C
EROSION PREVENTION & SEDIMENT CONTROL PLANS	7 – 7L
TRAFFIC CONTROL PLANS	8 – 8F
SIGNING AND PAVEMENT MARKING SHEET(S)	9 – 9D
GROUND IMPROVEMENT LAYOUT	10
ROADWAY CROSS SECTIONS	11 – 22
BRIDGE PLANS	B1 -B38
GATE DETAIL AND NOTES	G1-G2
LIGHTING DETAIL AND NOTES	L1 -L5
STORM WATER POLLUTION PREVENTION PLAN (SWPPP) PLANS	S1 – S12
UTILITIES PLANS	U1–U9
SE PARK SEWER RELOCATION	U2-1 – U2-11

NOTE: THE ALPHABETICAL LETTERS "I", "O" & "Q" ARE NOT USED IN NUMBERING OF SHEETS.

ROADWAY DESIGN STANDARDS

RD11-SE-3		SUPERELEVATION TRANSITION DETAILS FOR DIVIDED ROADWAYS
RD11-SE-3A		SUPERELEVATION TRANSITION SECTIONS FOR DIVIDED ROADWAYS
RD11-TS-1	06-28-19	DESIGN STANDARDS FOR LOW-VOLUME ROADS
RD11-TS-1A	06-28-19	DESIGN STANDARDS FOR LOCAL ROADS AND STREETS
RD11-TS-3		DESIGN STANDARD FOR ARTERIAL HIGHWAYS (2-LANE)
RD11-TS-3A	06-28-19	DESIGN STANDARDS FOR ARTERIAL HIGHWAYS WITH DEPRESSED MEDIAN (4 AND 6 LANE)
RD11-TS-6A		TYPICAL CURB & GUTTER SECTIONS WITHOUT SHOULDERS AND WITH GRASS STRIPS
RD11-LR-1		MINIMUM RUNOFF LENGTHS (LR) FOR URBAN HIGHWAYS
RD11-S-11		DESIGN AND CONSTRUCTION DETAILS FOR ROADSIDE SLOPE DEVELOPMENT
RD11-SD-1		INTERSECTION SIGHT DISTANCE DESIGN AND GENERAL NOTES
RD11-SD-2		INTERSECTION SIGHT DISTANCE LANDSCAPE AND OBSTRUCTION
RD11-SD-3		INTERSECTION SIGHT DISTANCE 2-LANE ROADWAYS
RD11-SD-5		INTERSECTION SIGHT DISTANCE 4-LANE DIVIDED HIGHWAYS
RD-UD-3	06-28-19	UNDERDRAIN DETAILS

STANDARD ROADWAY DRAWINGS

PIPE CULVERTS AND ENDWALLS

DWG.	REV.	DESCRIPTION
D-PB-1	06-28-19	STANDARD DETAILS FOR CONCRETE PIPE INSTALLATION
D-PE-4	06-28-19	STRAIGHT CONCRETE ENDWALLS (PIPE SIZES 18" TO 30")
D-PE-9	06-28-19	TYPE "B" CONCRETE ENDWALLS FOR ROUND AND SIDE TAPERED INLETS (PIPIE SIZES 15" TO 78", ALL SKEWS, 2:1 AND 4:1 SLOPES)
D-PE-9A	06-28-19	TYPE "B" CONCRETE ENDWALLS FOR ROUND INLETS, DETAILS & QUANTITIES (PIPE SIZES 15" TO 78", ALL SKEWS, 2:1 AND 4:1 SLOPES)
D-PE-9B	06-28-19	TYPE "B" CONCRETE ENDWALLS FOR SIDE TAPER INLETS, DETAILS & QUANTITIES (PIPE SIZES 15" TO 78", ALL SKEWS, 2:1 AND 4:1 SLOPES)
D-PE-9C	06-28-19	TYPE "B" CONCRETE ENDWALLS, BILL OF STEEL FOR CONCRETE PIPES (PIPE SIZES 15" TO 78", ALL SKEWS, 2:1 SLOPE)
D-PE-9D	06-28-19	TYPE "B" CONCRETE ENDWALLS, BILL OF STEEL FOR CONCRETE PIPES (PIPE SIZES 15" TO 78", ALL SKEWS, 4;1 SLOPE)
D-PE-9E	06-28-19	TYPE "B" CONCRETE ENDWALLS, BILL OF STEEL FOR STEEL PIPES (PIPE SIZES 15" TO 78", ALL SKEWS, 2:1 SLOPE)
D-PE-9F	06-28-19	TYPE "B" CONCRETE ENDWALLS, BILL OF STEEL FOR STEEL PIPES (PIPE SIZES 15" TO 78", ALL SKEWS, 4:1 SLOPE)

CATCH BASINS AND MANHOLES

DWG.	REV.	DESCRIPTION
D-CB-12P	02-20-20	STANDARD PRECAST RECTANGULAR CONCRETE NO.12 CATCH BASIN
D-CB-14P	02-20-20	STANDARD PRECAST RECTANGULAR CONCRETE NO. 14 CATCH BASIN
D-CB-42SB	02-20-20	STANDARD 4'X4' SQUARE CONCRETE NO. 42 CATCH BASIN
D-CB-99	02-20-20	MISCELLANEOUS DETAILS FOR RECTANGULAR STRUCTURES
D-CBB-12A	06-28-19	TYPE 'B' CAST IRON FRAME, GRATE & VERTICAL INLET DETAILS FOR NOS. 10, 12, 14, 16 & 17 TYPE CATCH BASINS
D-CBB-42	02-20-20	CAST IRON GRATE DETAILS FOR NOS. 42, 43 & 44 TYPE CATCH BASINS
D-MH-2	02-20-20	STANDARD MASONRY & PRECAST NO. 3 MANHOLE
D-MH-3	02-20-20	TYPICAL DESIGN OF LIDS FOR NO. 3 MANHOLE
D-MH-4	02-20-20	STANDARD NO. 3 MANHOLE CASTINGS AND STEPS
D-RF-1	02-20-20	STANDARD PRECAST RISER

ROADWAY, PAVEMENT APPURTENANCES, AND FENCES

DWG.	REV.	DESCRIPTION
RP-VC-10	06-28-19	VERTICAL CONCRETE CURBS AND CONCRETE CURBS AND GUTTERS

MULTIMODAL

DWG.	REV.	DESCRIPTION
MM-CR-1	06-28-19	DETECTABLE WARNING SURFACE PLACEMENT ON CURB RAMPS
MM-CR-2		PERPENDICULAR CURB RAMP
MM-CR-3		PARALLEL CURB RAMP
MM-CR-4		PEDESTRIAN REFUGE
MM-CR-5	06-28-19	SINGLE CROSSING CURB RAMP IN CURVE
MM-CR-6		DUAL CROSSING CURB RAMP PLACED OUTSIDE CURVE
MM-CR-7		CURB RAMPS IN CURVE BI-DIRECTIONAL DUAL CROSSING
MM-CR-8		MONO-DIRECTIONAL SINGLE CROSSWALK CURB RAMP DETAILS
MM-CR-9		ALTERNATIVE CURB RAMP DETAILS
MM-PM-1		SIGNING AND PAVEMENT MARKINGS AT INTERSECTION CROSSINGS FOR SHARED-USE PATHS
MM-BPR-1		BIKE AND PEDESTRIAN SAFETY RAIL
MM-SW-1	06-28-19	DETAILS FOR CONCRETE SIDEWALKS
MM-TS-1	06-28-19	BIKE ACCOMMODATION DESIGN GUIDANCE
MM-TS-2	01-07-19	LATERAL OFFSETS FOR SIDEWALK AND SHARED USE PATH
MM-TS-3	06-28-19	SEPARATED SHARED USE PATH TYPICAL SECTIONS

SAFETY DESIGN AND GUARDRAIL

DWG.	REV.	DESCRIPTION
S-CZ-1	06-28-19	CLEAR ZONE CRITERIA
S-PL-1		SAFETY PLAN AT ROADSIDE HAZARDS
S-PL-3	06-28-19	SAFETY PLAN MINIMUM INSTALLATION AT BRIDGE ENDS
S-PL-6	06-28-19	SAFETY PLAN SAFETY HARDWARE PLACEMENT ON OUTSIDE EDGE
S-GR31-1	06-28-19	GUARDRAIL DETAILS
S-GR31-1A	06-28-19	GUARDRAIL AND BLOCK-OUT DETAILS
S-GR31-1B		GUARDRAIL FASTENING HARDWARE
S-GR31-1C		GUARDRAIL GENERAL NOTES AND POST DETAILS
S-GRC-6	02-28-20	GUARDRAIL CONNECTION TO BRIDGE ENDS FOR LOW SPEED ROADWAYS
S-GRT-2P	06-28-19	EARTH PAD FOR TYPE 38 AND TYPE 21 TERMINAL
S-GRT-3	06-28-19	TYPE 21 GUARDRAIL END TERMINAL

DESIGN - TRAFFIC CONTROL

DWG.	REV.	DESCRIPTION
T-M-1	06-28-19	DETAILS OF PAVEMENT MARKINGS FOR CONVENTIONAL ROADS AND MARKING ABBREVIATIONS
T-M-2	06-28-19	DETAILS OF PAVEMENT MARKINGS FOR CONVENTIONAL ROADS
T-M-3	06-28-19	MARKING STANDARDS FOR TRAFFIC ISLANDS, PAVED SHOULDERS AND MEDIANS FOR CONVENTIONAL ROADS
T-M-4	06-28-19	STANDARD INTERSECTION PAVEMENT MARKINGS
T-WZ-16	06-28-19	LANE SHIFT FOR DIVIDED HIGHWAYS AND FREEWAYS
T-WZ-19	05-01-20	MEDIAN CROSS-OVER DETAIL ON DIVIDED HIGHWAYS
T-WZ-55	10-10-16	SIDEWALK TRAFFIC CONTROL

EROSION PREVENTION AND SEDIMENT CONTROL

DWG.	REV.	DESCRIPTION
EC-STR-1	08-01-12	DEWATERING STRUCTURE
EC-STR-2	08-01-12	SEDIMENT FILTER BAG
EC-STR-3C	06-28-19	SILT FENCE WITH WIRE BACKING
EC-STR-6A	05-06-16	ENHANCED ROCK CHECK DAM
EC-STR-25	08-01-12	TEMPORARY CULVERT CROSSING, CONSTRUCTION EXIT, CONSTRUCTION FORD
EC-STR-34	08-01-12	EROSION CONTROL BLANKET FOR SLOPE INSTALLATION
EC-STR-35	08-01-12	FILTER BERMS
EC-STR-37	06-10-14	SEDIMENT TUBE
EC-STR-19	04-01-08	CATCH BASIN PROTECTION
EC-STR-39A	08-01-12	CURB INLET PROTECTION TYPE 3 & 4

VOID FOR BIDDING FOR INFORMATION ONLY

SEALED BY

BRIAN A. RALSTIN REGISTERED ENGINEER AGRICULTURE COMMERCE No. 119683 STATE OF TENNESSEE

9/18/2020

HISTORIC FRANKLIN TENNESSEE 1799

CITY OF FRANKLIN
ENGINEERING DEPARTMENT

ROADWAY INDEX AND STANDARD ROADWAY DRAWINGS

9/22/2020 5:01:05 PM
Y:\Nashville\16019000S\16019033.00\Eng_Docs\Roadway\001A.sht

TYPE	YEAR	PROJECT NO.	SHEET NO.
CONST.	2020	COF# 2019-0098	2

ESTIMATED PROJECT QUANTITIES

	ITEM NO.	DESCRIPTION	UNIT	QUANTITY
	105-01	CONSTRUCTION STAKES, LINES AND GRADES	LS	1
	201-01	CLEARING AND GRUBBING	LS	1
(3)(31)	202-03	REMOVAL OF RIGID PAVEMENT, SIDEWALK, ETC.	S.Y.	61
(31)	202-08.15	REMOVAL OF CURB AND GUTTER	L.F.	952
	203-01	ROAD & DRAINAGE EXCAVATION (UNCLASSIFIED)	C.Y.	3000
	203-03	BORROW EXCAVATION (UNCLASSIFIED)	C.Y.	25000
	203-04	PLACING AND SPREADING TOPSOIL	C.Y.	693
(38)	203-50	CONSTRUCTION OF HAUL ROAD	L.S.	1
	204-02.01	DRY EXCAVATION (BRIDGES)	C.Y.	150
(3)(4)(5)(37)	209-08.02	TEMPORARY SILT FENCE (WITH BACKING)	L.F.	13800
(4)(5)(37)(44)	209-08.08	ENHANCED ROCK CHECK DAM	EACH	35
(4)(5)(11)(37)(43)	209-09.03	SEDIMENT FILTER BAG (15' X 15')	EACH	6
(4)(5)	209-09.43	CURB INLET PROTECTION (TYPE 4)	EACH	46
(37)(42)	209-10.01	TEMPORARY DEWATERING STRUCTURE	C.Y.	298
(4)(5)	209-40.33	CATCH BASTIN PROTECTION (TYPE D)	EACH	28
(37)(41)	209-99.92	CONSTRUCTION ENTRANCE	LS	1
(37)(38)(46)	303-01	MINERAL AGGREGATE, TYPE A BASE, GRADING D	TON	6426
(B8)	303-01.03	GRANULAR BACKFILL (BRIDGES)	TON	56
(23)	303-10.01	MINERAL AGGREGATE (SIZE 57)	TON	3750
	307-01.21	ASP. CONC. MIX(PG70-22) (BPMB-HM) GR. A-S	TON	1125
	307-02.01	ASPHALT CONCRETE MIX (PG70-22) (BPMB-HM) GRADING A	TON	1645
	307-02.08	ASPHALT CONCRETE MIX (PG70-22) (BPMB-HM) GRADING B-M2	TON	1010
	402-01	BITUMINOUS MATERIAL FOR PRIME COAT (PC)	TON	10
	402-02	AGGREGATE FOR COVER MATERIAL (PC)	TON	36
	403-02.01	TRACKLESS TACK COAT	TON	9
	406-03.02	STEEL BAR REINFORCEMENT (BRIDGES)	LB	69511
	411-02.10	ACS MIX(PG70-22) GRADING D	TON	968
(3)	415-01.02	COLD PLANING BITUMINOUS PAVEMENT	S.Y.	5028
(B3)	602-04.01	STEEL STRUCTURES	LS	1
	604-01.01	CLASS A CONCRETE (ROADWAY)	C.Y.	5
	604-02.03	EPOXY COATED REINFORCING STEEL	LB	263107
	604-03.01	CLASS 'A' CONCRETE	C.Y.	247
(B1)	604-03.04	PAVEMENT AT BRIDGE ENDS	S.Y.	276
	604-03.09	CLASS 'D' CONCRETE (BRIDGE DECK)	C.Y.	738
	604-04.01	APPLIED TEXTURE FINISH (NEW STRUCTURES)	S.Y.	2302
(B12)	604-04.10	GRAFFITI PROTECTION SYSTEM	S.Y.	237
(B13)	604-10.89	MISCELLANEOUS BRIDGE ITEMS (TEMPORARY BRIDGE)	LS	1
(B7)(B2)	604-11.01	EXPANSION DEVICE (EACH ABUTMENT, 4" MOVEMENT)	L.F.	104
	606-02.03	STEEL PILES (10 INCH)	L.F.	905
(B9)	606-02.06	PILE TIPS (STEEL PILES, 10 INCH)	EACH	36
(2)	607-03.02	18" CONCRETE PIPE CULVERT (CLASS III)	L.F.	1272
(2)	607-06.02	30" CONCRETE PIPE CULVERT (CLASS III)	L.F.	295
(2)	607-07.02	36" CONCRETE PIPE CULVERT (CLASS III)	L.F.	15
(B14)	610-10.04	DRAINAGE SYSTEM (BRIDGE DECK) (CLOSED SYSTEM)	LS	1
(B4)	610-10.45	DECK DRAINS (54" ACO GALVANIZED SCUPPER)	EACH	14
	611-01.02	MANHOLES, > 4' - 8' DEPTH	EACH	2
	611-01.03	MANHOLES, > 8' - 12' DEPTH	EACH	1
	611-07.01	CLASS A CONCRETE (PIPE ENDWALLS)	C.Y.	11
	611-07.02	STEEL BAR REINFORCEMENT (PIPE ENDWALLS)	LB.	954
(1)(33)	611-09.02	REWORK CATCH BASIN	EA	4
	611-12.02	CATCH BASINS, TYPE 12, > 4' - 8' DEPTH	EACH	16
	611-12.03	CATCH BASINS, TYPE 12, > 8'-12' DEPTH	EACH	3
	611-14.02	CATCH BASINS, TYPE 14, > 4' - 8' DEPTH	EACH	5
	611-42.02	CATCH BASINS, TYPE 42, > 4' - 8' DEPTH	EACH	1
	611-42.03	CATCH BASINS, TYPE 42, > 8' - 12' DEPTH	EACH	1
	620-03.10	TRAFFIC RAIL	L.F.	630
	620-03.11	MEDIAN BARRIER RAIL	L.F.	596
	620-03.12	PEDESTRIAN RAIL	L.F.	528
(B11)(B10)	625-02.01	DRILLED SHAFT - SOIL (5'-0")	V.F.	101
(B11)(B10)	625-02.13	DRILLED SHAFT - ROCK (3'-6")	V.F.	90
	625-02.25	DRILLED SHAFT CASING - PERMANENT (5'-0" INSIDE DIA. STEEL)	V.F.	101
	625-02.40	DRILLED SHAFT (SH-SCC) CONCRETE	C.Y.	106
(B19)	625-02.43	CONCRETE CORING	V.F.	203
(B21)	626-01.01	AGGREGATE FOUNDATION SYSTEMS	LS	1
(15)(32)	701-01.01	CONCRETE SIDEWALK (4 ")	S.F.	12600
(7)(32)	701-02.03	CONCRETE CURB RAMP	S.F.	553
	702-03	CONCRETE COMBINED CURB & GUTTER	C.Y.	341
(13)	705-06.26	THRIE BEAM BRIDGE TRANSITION MASH TL-2	EACH	2
(13)	705-06.30	GR TERMINAL (ENERGY ABSORBING) MASH TL2	EACH	2
(3)(4)(5)(33)	707-02.11	CHAIN-LINK FENCE (6 FOOT) (VINYL COATED)	L.F.	234
(33)	707-02.13	GATE CHAIN-LINK FENCE (6 FOOT) (VINYL COATED)	EACH	1
(4)(5)	707-08.11	HIGH-VISIBILITY CONSTRUCTION FENCE	L.F.	310
(3)(5)(14)(37)(38)	709-05.05	MACHINED RIP-RAP (CLASS A-3)	TON	2557
(B18)	709-05.08	MACHINED RIP-RAP (CLASS B)	TON	492
	710-02	AGGREGATE UNDERDRAINS (WITH PIPE)	L.F.	1914
(B5)	710-09.01	6" PERF. PIPE WITH VERTICAL DRAIN SYSTEM	L.F.	192
	710-09.02	6" PIPE UNDERDRAIN	L.F.	88
	712-01	TRAFFIC CONTROL	LS	1
	712-04.01	FLEXIBLE DRUMS (CHANNELIZING)	EACH	150
(35)	712-05.01	WARNING LIGHTS (TYPE A)	EACH	4
	712-05.02	WARNING LIGHTS (TYPE B)	EACH	4
	712-06	SIGNS (CONSTRUCTION)	S.F.	165.5
(35)	712-07.03	TEMPORARY BARRICADES (TYPE III)	L.F.	156
(17)	713-02.21	SIGN POST DELINEATION ENHANCEMENT	L.F.	92
(3)	713-11.02	PERFORATED/KNOCKOUT SQUARE TUBE POST	LB.	418
(3)	713-11.21	P POST SLIP BASE	EACH	20
(3)	713-13.02	FLAT SHEET ALUMINUM SIGNS (0.080" THICK)	S.F.	138.25
(8)	713-15	REMOVAL OF SIGNS, POSTS AND FOOTINGS	LS	1
(3)	713-16.01	CHANGEABLE MESSAGE SIGN UNIT	EACH	4
(B22)	713-16.20	SIGNS (NOTICE/NO CLIMBING)	EACH	6
(B22)	713-16.22	SIGNS (SOUTHEAST PARK 93.3)	EACH	2
(10)	713-16.41	RELOCATE SIGN	LS	1
(B6)	714-01.01	STRUCTURAL LIGHTING	LS	1
(34)(50)	714-01.38	LIGHT POLE RELOCATION	EACH	6
(33)	714-03.01	DIRECT BURIAL CONDUIT (2" PVC, SCHEDULE 80)	L.F.	1765
	714-03.04	DIRECT BURIAL CONDUIT (1 1/2" PVC, SCHEDULE 80)	L.F.	38
	714-03.05	DIRECT BURIAL CONDUIT (1" PVC, SCHEDULE 80)	L.F.	159
(33)	714-05.05	PULL BOX (SMALL SECONDARY)	EACH	9
(33)	714-05.06	PULL BOX (LARGE)	EACH	3
	714-06.04	CABLE (1/C # 8 AWG)	L.F.	571
	714-06.05	CABLE (1/C # 6 AWG)	L.F.	1435
(33)	714-08.09	LIGHT STANDARDS (SSA3066J)	EACH	2
(33)	714-08.28	FOUNDATION FOR LIGHT STANDARDS - ROADWAY (2' DIA X 8')	EACH	8
(33)(34)	714-08.32	REMOVAL OF LIGHT STANDARD AND FOUNDATION	EACH	6
(33)	714-09.09	LUMINARE	EACH	24
(57)	714-12	CONTROL CENTER	L.S.	1
(49)	714-75.02	PHOTO ELECTRIC RELAY 240V	EACH	2
	716-01.21	SNOWPLOWABLE RAISED PVMNT MRKRS (BI-DIR)(1 COLOR)	EACH	24
	716-01.22	SNOWPLOWABLE RAISED PVMNT MRKRS (MONO-DIR)(1 COLOR)	EACH	14
(3)	716-02.04	PLASTIC PAVEMENT MARKING (CHANNELIZATION STRIPING)	S.Y.	2495
(3)	716-02.05	PLASTIC PAVEMENT MARKING (STOP LINE)	L.F.	24
(3)	716-02.06	PLASTIC PAVEMENT MARKING (TURN LANE ARROW)	EACH	7
(3)	716-04.03	PLASTIC PAVEMENT MARKING (4" DOTTED LINE)	L.F.	356
(3)	716-02.09	PLASTIC PAVEMENT MARKING (LONGITUDINAL CROSS-WALK)	L.F.	75
(3)	716-02.12	PLASTIC PAVEMENT MARKING (8" BARRIER LINE)	L.F.	320
(3)	716-04.01	PLASTIC PAVEMENT MARKING (STRAIGHT-TURN ARROW)	EACH	2
(3)	716-05.01	PAINTED PAVEMENT MARKING (4" LINE)	L.M.	3.04
(3)	716-05.02	PAINTED PAVEMENT MARKING (8" BARRIER LINE)	L.F.	350
(25)	716-10.23	PREFRMD PLSTC PVMNT MRKING 4IN LINE W/1.5IN BLACK SIL	L.M.	0.42
(3)(26)	716-12.01	ENHANCED FLATLINE THERMO PVMT MRKNG (4IN LINE)	L.M.	2.20

VOID FOR BIDDING
FOR INFORMATION ONLY

SEALED BY

BRIAN A. RALSTIN
REGISTERED ENGINEER
No. 119683
STATE OF TENNESSEE
9/18/2020

HISTORIC FRANKLIN TENNESSEE

CITY OF FRANKLIN
ENGINEERING DEPARTMENT

ESTIMATED PROJECT QUANTITIES

	717-01	MOBILIZATION	LS	1
	725-24.10	CABINET BOLLARD	EACH	2
(51)	730-13.08	LOOP DETECTOR 6'X8'	EACH	5
	730-14.01	LOOP LEAD-IN CABLE (SHIELDED DETECTOR CABLE)	L.F.	75
(B17)	740-07.02	GEOGRID REINFORCEMENT (SOIL SLOPES)	S.Y.	725
(3)(5)(37)(38)(45)	740-10.03	GEOTEXTILE (TYPE III)(EROSION CONTROL)	S.Y.	3587
(24)	740-10.04	GEOTEXTILE (TYPE IV) (STABILIZATION)	S.Y.	13940
(4)(5)(37)	740-11.03	TEMPORARY SEDIMENT TUBE 18IN	L.F.	1000
(16)	791-03.04	4IN HDPE GAS MAIN	L.F.	576
(16)	791-04.13	HDD 4IN PE PIPE ROCK	L.F.	128
(16)	791-06.03	CONNECT TO 4IN EX. PE MAIN	EACH	1
(B20)	795-13.04	BRIDGE HANGER SYSTEM	LS	1
(33)	795-51.01	BOLLARD	EACH	5
(16)	797-01.53	VENT PIPE ASSEMBLY	EACH	1
	798-05.71	RS-485 COMMUNICATION CABLE	L.F.	49
(52)	798-05.72	HYSECURITY - HYINVERTER AC WITH WORKING PAD	EACH	2
(53)	798-05.73	HYSECURITY - STRONGARM 14F	EACH	2
(56)	798-05.74	HYSECURITY - HYNET GATEWAY	EACH	1
(54)	798-05.75	HID - PROXIMITY PROXPRO WITH KEYPAD 5355	EACH	1
(55)	798-05.76	GATORPATCH PANEL, 2 STEP	EACH	1
(37)(39)	801-01	SEEDING (WITH MULCH)	UNIT	571
(4)(5)(30)	801-01.07	TEMPORARY SEEDING (WITH MULCH)	UNIT	485
(29)(30)	803-01	SODDING (NEW SOD)	S.Y.	10000
(37)(40)	805-01.03	TURF REINFORCEMENT MAT (CLASS III)	S.Y.	131
(B15)	908-21.01	BEARINGS (ABUTMENT NOS. 1 & 2)	EACH	12
(B16)	908-21.02	BEARINGS (BENT NOS. 1 & 2)	EACH	12
(48)	921-01.01	TEMPORARY RIVER CROSSING	LS	1
(27)	UTL 1	CLASS A CONCRETE (ROADWAY)	C.Y.	5
(36)	RW1	12IN CLASS 350 DIP RESTRAINED JOINT RECLAIMED WATER MAIN	L.F.	422
(36)	RW2	12 IN CLASS 350 DIP RESTRAINED JOINT RECLAIMED WATER MAIN INSTALLED IN 24" STEEL CASING PIPE (.250 IN WALL THICKNESS) (PRICE INCLUDES INSTALLATION, CASING SPACERS, INSULATION)	L.F.	544
(36)	RW3	12IN RECLAIMED WATER MAIN BUTTERFLY VALVE AND BOX	EACH	2
(36)	RW4	1IN SDR9 RECLAIMED WATER SERVICE PIPE	L.F.	65
(36)	RW5	FIRE HYDRANT ASSEMBLY (RECLAIMED WATER MAIN) (ADD SIGN DO NOT DRINK)	EACH	1
(36)	RW6	1IN WATER SERVICE METER ASSEMBLY (INCLUDES METER BOX, COPPER METER SETTING AND RECLAIMED WATER IRRIGATION SIGN; NO METER REQUIRED AT THIS TIME) (RECLAIMED METER)	EACH	1
(36)	RW7	CUT AND CAP 12IN RECLAIMED WATERMAIN	EACH	2
(36)	W1	10IN CLASS 350 DIP RESTRAINDED JOINT WATER MAIN	L.F.	416
(36)	W2	10 IN CLASS 350 DIP RESTRAINED JOINT WATER MAIN INSTALLED IN 24" STEEL CASING PIPE (.250 IN WALL THICKNESS) (PRICE INCLUDES INSTALLATION, CASING SPACERS, INSULATION)	L.F.	544
(36)	W3	10IN WATER MAIN GATE VALVE AND BOX	EACH	2
(36)	W4	FIRE HYDRANT ASSEMBLY (WATER MAIN)	EACH	1
(36)	W5	CUT AND CAP 10 IN WATERLINE MAIN	EACH	2
(36)	G3	OVER DEPTH EXCAVATION AND BACKFILL W/ CRUSHED STONE	C.Y.	100
(36)	G6	TEMPORARY FACILITIES AND CONTROLS (01-5000)	LS	1
(36)	SS1	24" DIP CL 350 W/ PROTECTO-401 LINING GRAVITY SEWER	L.F.	529
(36)	SS2	30" DIP CL 350 W/ PROTECTO-401 LINING GRAVITY SEWER	L.F.	527
(36)	SS3	30" RESTRAINED JOINT DIP CL 350 W/ PROTECTO-401 LINING GRAVITY SEWER IN 48" STEEL CASING PIPE (OPEN CUT)	L.F.	251
(36)	SS4	60" MANHOLE, 0'-6' DEPTH	EACH	5
(36)	SS5	ADDITIONAL DEPTH FOR 60" DIA. SANITARY SEWER MANHOLE	VF	97
(36)	SS6	ADDITIONAL PAYMENT FOR WATERTIGHT FRAME AND COVER	EACH	5
(36)	SS7	MANHOLE VENT ASSEMBLY W/ VENT CHECK VALVE	EACH	1
(36)	SS8	CONNECT 30" GRAVITY SAN. SEWER TO EX. MANHOLE (EX3)	EACH	1
(36)	SS9	CONNECT MH TO EX. 24" GRAVITY SAN. SEWER (MHA1 & MHB1)	EACH	2
(36)	SS10	CONCRETE CHECK DAM (SAN. SEWER MAIN LINE)	EACH	5
(36)	SS11	CUT AND CAP/PLUG 24" EXISTING SAN. SEWER MAIN	EACH	2
(36)	SS12	FLOWABLE FILL EX. SAN. SEWER AND MH ABANDON EX. SEWER MH (EX6) AND SANITARY SEWER MAIN (B1-EX4)	C.Y.	150
(36)	SS13	REMOVAL OF 24" SAN. SEWER MAIN (B/T MHA1 AND EX3)	L.F.	778
(36)	SS14	REMOVAL OF EX. MANHOLE (EX4, EX20, EX21)	EACH	3
(36)	SS15	OVER DEPTH EXCAVATION AND BACKFILL W/ CRUSHED STONE (WITHIN UTILITY TRENCH - AS DIRECTED BY ENGINEER)	C.Y.	100
(36)	SS16	SEWER TELEVISION INSPECTION OF NEW GRAVITY SEWER	L.F.	1,307
(36)	SS17	SEWER FLOW CONTROL	LS	1
(47)	COF1	UTILITY RECORD DRAWINGS	LS	1
	COF2	MISCELLANEOUS ALLOWANCE (AS DIRECTED AND APPROVED BY THE ENGINNER)	DOLL	150,000

TYPE	YEAR	PROJECT NO.	SHEET NO.
CONST.	2020	COF# 2019-0098	2-1

ROADWAY QUANTITY FOOTNOTES	
(1)	CONVERT EXISTING CATCHBASIN TO PROPOSED MANHOLE.
(2)	THE BEDDING AND BACKFILL MATERIAL SHALL BE INCLUDED IN THE COST OF THE PROPOSED PIPE CULVERT REGARDLESS OF LOCATION.
(3)	QUANTITY MAY BE INCREASED, DECREASED OR ELIMINATED AS DIRECTED BY THE ENGINEER.
(4)	PAY ITEM TO INCLUDE ALL NECESSARY INCIDENTALS INCLUDING COST FOR SEDIMENT REMOVAL. SEE SUBSECTION 209.07 OF THE STANDARD SPECIFICATION FOR MAINTENANCE REPLACEMENT.
(5)	ALL QUANTITIES ARE TO BE USED AS DIRECTED BY THE ENGINEER.
(6)	TO BE USED FOR SAWING CONCRETE CURB AND SIDEWALK.
(7)	553 SF MEASURED FOR STANDARD CURB RAMP PLACEMENT AT STREET APPROACHES.
(8)	TO INCLUDE COST FOR ALL ASPECTS OF REMOVAL RELATED TO EXISTING SIGNS.
(10)	TO INCLUDE COST FOR ALL ASPECTS OF REPLACEMENT OF EXISTING SIGNS.
(11)	UTILIZED FOR ANY GROUND WATER PUMPING ACTVITIES REQUIRED AS PART OF THIS PROJECT.
(12)	PAY ITEM USED FOR TEMP. CONSTRUCTION EXITS.
(13)	PAY ITEM TO INCLUDE ALL NECESSARY INCIDENTALS INCLUDING POWDER COATING BLACK ALL PROPOSED GUARDRAIL AND EARTH PAD CONSTRUCTION FOR GUARDRAIL TERMINALS.
(15)	INCLUDES 450 S.F. FOR REPLACEMENT OF SIDEWALK DUE TO INSTALLATION OF GAS LINE NEAR LOCKWOOD LANE.
(16)	INCLUDES ALL MATERIALS INCLUDING SAND/STONE BEDDING, FLOWABLE FILL, TEMPORARY PAVEMENT IN OR OUT OF ROW, LABOR, EQUIPMENT FOR COMPLETE INSTALLATION OF PIPE INCLUDING BUT NOT LIMITED TO TRAFFIC CONTROL, EXCAVATION INCLUDING DIRT/ROCK, BACKFILLING CREEK CROSSINGS PER SWPPP, COUPLINGS, FITTINGS, PIPE FUSION, APPURTENANCES, MAINTAINING THE TRENCH, PURGE POINT INSTALLATION, TESTING BY UTILITY SPECIFICATIONS TO INCLUDE BUT NOT LIMITED TO AIR, NITROGEN, HYDROSTATIC OR X-RAY, DEW POINT OR DRYING, AND ANY OTHER LABOR OR MATERIAL REQUIRED TO COMPLETE THE WORK AS SPECIFIED ON THE PLANS.
(17)	MATERIAL SHALL BE FROM THE QUALIFIED PRODUCTS LIST AND INSTALLED PER THE MANUFACTURER'S SPECIFICATIONS. QUANTITY INCLUDES 40 L.F. OF RED SIGN POST DELINEATION ENHANCEMENT AND 52 L.F. OF YELLOW SIGN POST DELINEATION ENHANCEMENT.
(23)	GRANULAR DRAINAGE LAYER FOR GROUND IMPROVEMENT.
(24)	TO BE USED TO ENLCOSE THE GRANULAR DRAINAGE LAYER FOR GROUND IMPROVEMENT.
(25)	PAVEMENT MARKINGS SHALL BE 3M STAMARK HIGH PERFORMANCE TAPE SERIES 380AW AND BE APPLIED TO ALL PAVEMENT MARKINGS ALONG CONCRETE SURFACE OF THE BRIDGE DECK.
(26)	TO BE USED ON ALL ASPHALT SURFACES.
(27)	TO BE USED AS CONCRETE PROTECTION FOR BURIED UTILITES PER DWG NO G-9

VOID FOR BIDDING
FOR INFORMATION ONLY

SEALED BY

BRIAN A. RALSTIN
REGISTERED ENGINEER
XVI
AGRICULTURE
COMMERCE
No. 119683
STATE OF TENNESSEE
9/18/2020

HISTORIC FRANKLIN TENNESSEE

CITY OF FRANKLIN
ENGINEERING DEPARTMENT

ESTIMATED PROJECT QUANTITIES

9/29/2020 3:39:16 PM
Y:\Nashville\16019000S\16019033.00\Eng_Docs\Roadway\002-1.sht

TYPE	YEAR	PROJECT NO.	SHEET NO.
CONST.	2020	COF# 2019-0098	2-2

ROADWAY QUANTITY FOOTNOTES	
(29)	SOD SHALL CONSIST OF ROLLS OF VIGOROUS GROWING DENSE PERENNIAL GRASS TURF. THE MINIMUM THICKNESS FOR GRASS SOD IS TWO INCHES. LAY THE SOD WITHIN 48 HOURS OF HARVEST.
(30)	PAY ITEM TO INCLUDE ALL INCIDENTALS INCLUDING COST FOR WATER.
(31)	PAY ITEM TO INCLUDE ALL INCIDENTALS INCLUDING COST FOR SAW CUTTING CONCRETE AND ASPHALT.
(32)	PAY ITEM TO INCLUDE ALL INCIDENTALS INCLUDING COST FOR 4IN OF BASE STONE.
(33)	PAYMENT FOR THIS WORK SHALL BE CONSIDERED AS FULL COMPENSATION FOR THIS ITEM, INCLUDING ALL LABOR, MATERIALS, AND EQUIPMENT REQUIRED TO COMPLETE THE ITEM IN ACCORDANCE WITH THE BIDDING DOCUMENTS.
(34)	EXISTING LIGHT POLES TO BE REUSED AND INSTALLED ON NEW FOUNDATIONS. LIGHT POLES TO BE PROTECTED AND HELD IN A SAFE LOCATION UNTIL REINSTALLATION.
(35)	84LF OF BARRICADE AND TWO (2) TYPE A WARNING LIGHTS TO REMAIN AFTER CONSTRUCTION AND WILL BECOME PROPERTY OF THE CITY OF FRANKLIN. THE BARRICADES TO REMAIN WILL BE IN LIKE NEW CONDITION MEETING ALL MUTCD VISIBILITY STANDARDS.
(36)	SEE MODIFIED CITY OF FRANKLIN, TN WATER AND SANITARY SEWER SPECIFICATIONS FOR MEASUREMENT AND PAYMENT.
(37)	SPECIFICATIONS IS BASED ON TDOT STANDARDS WITH MODIFIED MEASUREMENT AND PAYMENT AS SHOWN ON THE BID FORM.
(38)	THIS LINE ITEM IS FOR EXISTING UTILITY ACCESS ROADWAY OUTSIDE THE LIMITS OF THE TEMPORARY CROSSING AS DETERMINED BY THE ENGINEER. IMPROVEMENTS SHALL BE BUILT ON TOP OF EXISTING GRADE AND SHALL REMAIN AT THE COMPLETION OF CONSTRUCTION.
(39)	THE CONTRACTOR SHALL BE RESPONSIBLE FOR ESTABLISHING SATISFACTORY STAND OF GRASS TO ACHIEVE TDEC PERMIT REQUIREMENTS. PRICE SHALL INCLUDE ALL MATERIAL AND LABOR NECESSARY FOR CONSTRUCTION AND MAINTENANCE TO INCLUDE PREPARATION OF TOPSOIL, SEEDING, MULCH/STRAW, WATER, ETC. NO ADDITIONAL PAYMENT WILL BE MADE FOR SUPPLEMENTAL REPAIR SEEDING
(40)	PRICE SHALL INCLUDE ALL MATERIALS AND LABOR NECESSARY FOR CONSTRUCTION AND MAINTENANCE OF TURF REINFORCEMENT MATS TO INCLUDE MINOR GRADING AND SITE PREPARATIONS AS NEEDED.
(41)	PAYMENT SHALL INCLUDE ALL MATERIALS AND LABOR NECESSARY FOR CONSTRUCTION AND MAINTENANCE OF THE TEMPORARY CONSTRUCTION ENTRANCE TO INCLUDE ROAD AND DRAINAGE EXCAVATION, MINERAL AGGREGATE (SIZE 57) MACHINED RIP-RAP (CLASS A-3), GEOTEXTILE (TYPE III).
(42)	PRICE INCLUDES ALL MATERIALS AND LABOR NECESSARY FOR CONSTRUCTION, MAINTENANCE, REMOVAL OF THE DEWATERING STRUCTURE, SEDIMENT REMOVAL AND ROAD & DRAINAGE EXCAVATION AS NEEDED
(43)	PRICE INCLUDES ALL MATERIALS AND LABOR NECESSARY FOR CONSTRUCTION, MAINTENANCE, REMOVAL, BAG REPLACEMENT, 57 STONE, GEOTEXTILE FABRIC (TYPE III), SEDIMENT REMOVAL AND ROAD & DRAINAGE EXCAVATION AS NEEDED.
(44)	PRICE INCLUDES ALL MATERIALS AND LABOR NECESSARY FOR CONSTRUCTION, MAINTENANCE AND REMOVAL OF ENHANCED ROCK CHECK DAMS AND INCLUDE MINERAL AGGREGATE (SIZE 57), MACHINED RIP-RAP (CLASS A-1) AND GEOTEXTILE FABRIC (TYPE III).
(45)	INCLUDES 3,587 SY FOR SE PARK SEWER RELOCATION.
(46)	INCLUDES 809 TONS FOR SE PARK SEWER RELOCATION.
(47)	SEE CITY OF FRANKLIN SPECIAL PROVISION REGARDING UTILITY RECORD DRAWINGS FOR SPECIFICATIONS/REQUIREMENTS AND MEASUREMENT/PAYMENT.
(48)	PRICE INCLUDES ALL MATERIALS AND LABOR ASSOCIATED WITH THE DESIGN, CONSTRUCTION, REMOVAL, AND BANK RESTORATION AFTER REMOVAL FOR THE TEMPORARY RIVER CROSSING AND ASSOCIATED HAUL ROAD FOR THE CONSTRUCTION OF THE PROPOSED ACCESS ROAD.
(49)	PHOTO ELECTRIC RELAY 240V SHALL BE EATON STREETWORKS ACCESSORY OA/RA1016
(50)	FIELD DRILL MOUNTING HOLES FOR POLE MOUNT ARM IN ACCORDANCE WITH MANUFACTURER RECOMMENDATIONS
(51)	LOOP DETECTOR 6'X8' SHALL INCLUDE THE SAWCUT AND RUN OF THE LOOP DETECTOR THROUGH THE CURB LINE.
(52)	HYINVERTER AC SHALL INCLUDE 4- 110AH BATTERIES IN EACH UNIT.
(53)	THE HYSECURITY SHALL INCLUDE ALL PROGRAMMING REQUIRED FOR THE SITE TO BE OPERATIONAL.
(54)	THE KEYPAD SHALL ALSO INCLUDE THE PACHCO UNIVERSAL MOUNT AS WELL AS ALL CABLES TO CONNECT THE KEYPAD TO THE GATE SYSTEM.
(55)	THE GATORPATCH PANEL SHALL BE MODEL G620U012LAB-40-0.
(56)	THE HYNET GATEWAY SHALL INCLUDE AN LC DUPLEX SFP MODULE AND LC JUMPER CABLE TO CONNECT THE GATEWAY TO THE GATORPATCH PANEL.
(57)	METER PEDESTAL SHALL BE MILBANK SERVICE PEDESTAL MODEL NUMBER CP3B11110A22SL1. GRADE LEVEL PAD AS REQUIRED WITH 100A MAIN BREAKER AND (3) 2-POLE 20AMP BREAKERS. INSTALLATION SHALL INCLUDE THE RISER AND AN ADDITIONAL 10' OF SCH 80PVC TO CONNECT TO MAIN POWER SOURCE

BRIDGE QUANTITY FOOTNOTES	
(B1)	PRIOR TO CONSTRUCTION OF THE PAVEMENT AT BRIDGE ENDS, THE CONTRACTOR SHALL SUBMIT A PROPOSED BILL OF STEEL TO THE ENGINEER FOR APPROVAL.
(B2)	THE UNIT PRICE BID FOR ROADWAY EXPANSION DEVICES TO INCLUDE THE COST OF 134 S.Y. OF CONCRETE SEALER REQUIRED. SEE GENERAL NOTES FOR DESCRIPTION OF CONCRETE SEALER.
(B3)	LUMP SUM: THE TOTAL ESTIMATED WEIGHT OF 1,126,326 LBS. OF STRUCTURAL STEEL INCLUDES GIRDERS, FIELD SPLICES, CROSS FRAMES, STIFFENERS, SHEAR CONNECTORS, TAB CONNECTION PLATES, BOLTS, ETC. ALSO SEE THE STANDARD SPECIFICATIONS SECTIONS 602.49 AND 602.50.
(B4)	COST INCLUDES ALL LABOR AND MATERIALS ASSOCIATED WITH THE INSTALLATION OF FOURTEEN (14) ACO 54" GALVANIZED SCUPPERS AT LOCATIONS DESIGNATED ON SHEET B1.
(B5)	COST OF POLYETHYLENE SHEETING AND ALL MISCELLANEOUS ITEMS NECESSARY FOR INSTALLATION TO BE INCLUDED IN THE UNIT PRICE BID FOR PERFORATED PIPE.
(B6)	LUMP SUM FOR STRUCTURAL LIGHTING INCLUDES COST OF ALL LABOR AND MATERIALS FOR THE INSTALLATION AS FOLLOWS: UNDERPASS LIGHTING: 714-04.01 CONDUIT (STRUCTURES - 1" RGS), 50 L.F. 714-05.05 PULL BOXES (EMBEDDED IN STRUCTURE, STAINLESS STEEL, 12"X12"X6"), 2 EACH 714-09.09 LUMINAIRE (UNDERPASS LED 30W), 2 EACH 714-72.02 FLEXIBLE PVC CONDUIT 1 IN SCH 40, 12 L.F. 725-20.53 CABLE (1/C #10 AWG.), 186 L.F. BRIDGE LIGHTING ON TOP OF RAIL POSTS: 8 SQUARE ALUMINUM LIGHT POSTS 25' HEIGHT, 8 LED FIXTURES, 32 ANCHOR BOLTS, 3320 L.F. OF 3" DIA. PVC CONDUIT SEE SHEETS B28, B32 & B33 FOR LIGHTING DETAILS.
(B7)	THE EXPANSION JOINTS AT THE ABUTMENTS SHALL BE IN ACCORDANCE WITH SECTION 623.03 OF THE STANDARD SPECIFICATIONS. THE TOTAL REQUIRED MOVEMENT IS 4 INCHES. SHOP DRAWINGS SHALL BE SUBMITTED TO THE ENGINEER OF STRUCTURES FOR APPROVAL.
(B8)	GRANULAR BACKFILL SHALL BE CLASS "A" GRADING "D" MATERIAL. SEE STANDARD DRAWING NO. STD-10-1.
(B9)	THE UNIT PRICE BID FOR THE CAST STEEL POINTS SHALL INCLUDE FURNISHING AND INSTALLATION TO THE PILES.
(B10)	DRILLED SHAFT CONCRETE SHALL INCLUDE ALL COST FOR MATERIALS, CONCRETE PLACEMENT, AND INSTALLATION OF STEEL PIPES FOR SONIC LOGGING TESTING IN ACCORDANCE WITH TDOT SPECIAL PROVISION 625 SONIC LOGGING TESTING TO BE PERFORMED AT EACH SHAFT LOCATION.
(B11)	THE COST OF THE FOLLOWING ITEMS IS TO BE INCLUDED IN THE UNIT PRICE BID FOR ITEMS 625-02.01 AND 625-02.13: DRILLING, CLEANING AND INSPECTING THE SHAFT; TELEVISION CAMERA INSPECTION OF THE SHAFT WALLS AND ROCK SOCKET SURFACES; INSTALLATION OF ALL CASING; SETTING OF ALL SHAFT REINFORCING; TEMPORARY CASING.
(B12)	COST OF GRAFFITI PROTECTION SYSTEM TO INCLUDE ANTI-GRAFFITI COATING APPLIED TO ALL VISIBLE SURFACES OF THE BENTS. GRAFFITI PROTECTION SYSTEM SHALL CONSIST OF SHERWIN WILLIAMS ANTI-GRAFFITI COATING B97C00150 OR AN APPROVED EQUIVALENT SUBMITTED TO AND APPROVED BY THE CITY OF FRANKLIN ENGINEERING DEPARTMENT.
(B13)	SEE ROADWAY SHEET 7E FOR TEMPORARY BRIDGE DETAILS AND NOTES.
(B14)	INCLUDES COST OF ALL LABOR AND MATERIALS ASSOCIATED WITH THE INSTALLATION OF CLOSED DRAINAGE SYSTEM AS SHOWN ON SHEET B25. COMPLETE IN PLACE.
(B15)	INCLUDES COST OF ALL LABOR AND MATERIALS ASSOCIATED WITH THE INSTALLATION OF BEARING ASSEMBLY AT ABUTMENTS, INCLUDING STEEL PLATES, ANCHOR RODS, WASHERS, ELASTOMERIC BEARING PAD, RUBBER BONDING CEMENT, AND GALVANIZING AS SHOWN ON SHEET B16.
(B16)	INCLUDES COST OF ALL LABOR AND MATERIALS ASSOCIATED WITH THE INSTALLATION OF BEARING ASSEMBLY AT BENTS, INCLUDING STEEL PLATES, ANCHOR RODS, WASHERS, ELASTOMERIC BEARING PAD, AND GALVANIZING AS SHOWN ON SHEET B16.
(B17)	INCLUDES COST OF ALL LABOR AND MATERIALS ASSOCIATED WITH THE INSTALLATION OF FLEXAMAT SOIL SLOPE PROTECTION ON SIDE SLOPES AT BRIDGE ABUTMENTS AS SHOWN ON SHEET B1.
(B18)	INCLUDES COST OF ALL LABOR AND MATERIALS ASSOCIATED WITH THE INSTALLATION OF CLASS B RIP-RAP ON THE SLOPES AT ABUTMENTS UNDER THE BRIDGE AS SHOWN ON SHEET B1.
(B19)	QUANTITY BASED ON ONE (1) CORE PER SHAFT. SEE TDOT SPECIAL PROVISION 625 FOR ADDITIONAL INFORMATION.
(B20)	INCLUDES COST OF LABOR AND MATERIALS NECESSARY TO INSTALL ALL UTILITY HANGER ASSEMBLIES FOR 12" WATER LINE, 10" WATER LINE, AND 4" GAS LINE ON THE BRIDGE AND FLEX-900 OR APPROVED EQUAL FLEXIBLE BALL JOINTS AS INDICATED IN THE UTILITY PLANS.
(B21)	INCLUDES COST OF ALL LABOR AND MATERIALS ASSOCIATED WITH THE DESIGN, INSTALLATION, AND TESTING OF AGGREGATE FOUNDATION SYSTEM WITHIN LIMITS SHOWN ON SHEET B35. FOR ADDITIONAL DETAILS, SEE TDOT SPECIAL PROVISION 626
(B22)	INCLUDES COST OF ALL LABOR AND MATERIALS ASSOCIATED WITH THE INSTALLATION OF SIGNS AS SHOWN ON SHEET B34. RIVER MILE MARKER SIGNS (SOUTHEAST PARK 93.3) SHALL BE MANUFACTURED AND PAID FOR BY THE CITY OF FRANKLIN. COST OF LABOR AND INSTALLATION FOR RIVER MILE MARKER SIGNS TO BE PAID FOR UNDER ITEM NO. 713-16.22.

VOID FOR BIDDING
FOR INFORMATION ONLY

SEALED BY

BRIAN A. RALSTIN
REGISTERED ENGINEER
No. 119683
STATE OF TENNESSEE
9/18/2020

HISTORIC FRANKLIN TENNESSEE

CITY OF FRANKLIN
ENGINEERING DEPARTMENT

ESTIMATED PROJECT QUANTITIES

TYPE	YEAR	PROJECT NO.	SHEET NO.
CONST.	2020	COF# 2019-0098	2B

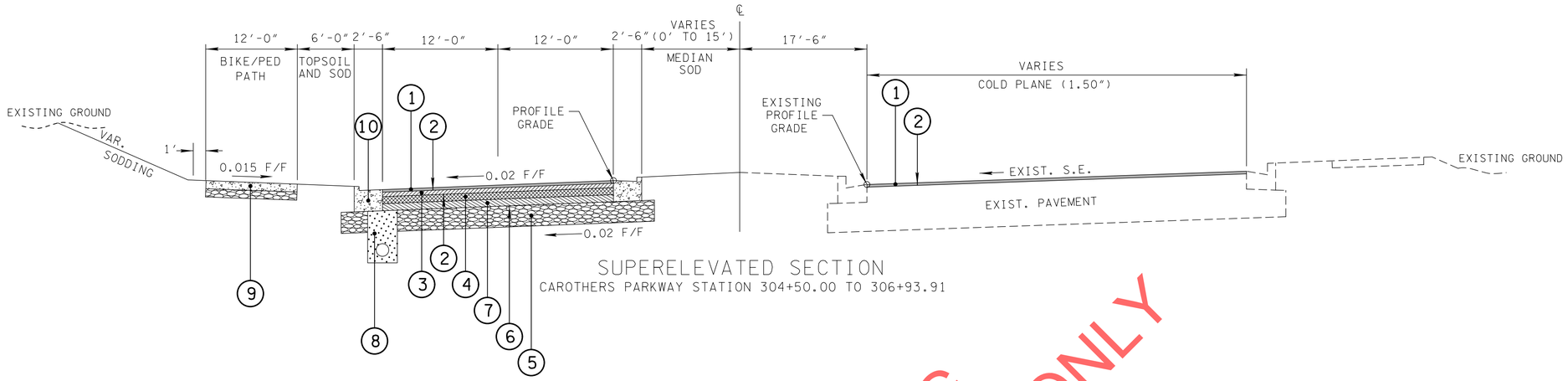

SUPERELEVATED SECTION

CAROTHERS PARKWAY STATION 304+50.00 TO 306+93.91

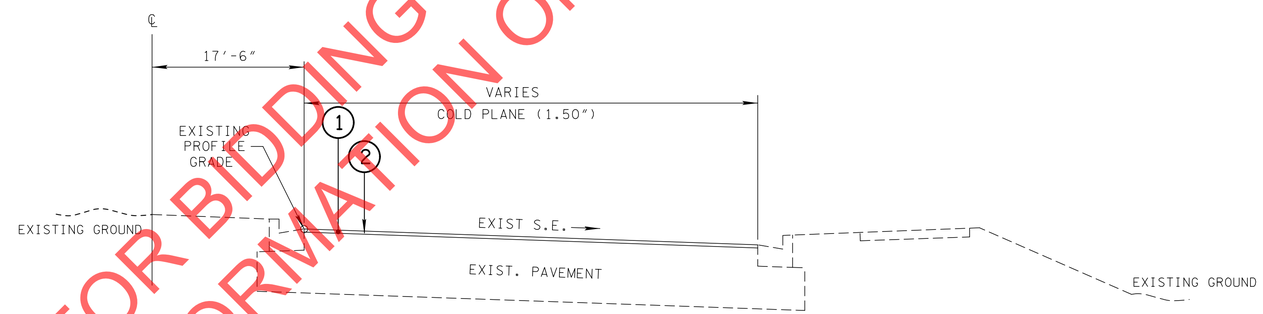

TANGENT SECTION

CAROTHERS PARKWAY STATION 302+24.22 TO 304+50.00
CAROTHERS PARKWAY STATION 317+00.00 TO 320+29.35

VOID FOR BIDDING
FOR INFORMATION ONLY

PROPOSED PAVEMENT SCHEDULE

1. ASPHALTIC CONCRETE SURFACE AT 1.50 IN. THICK (APPROX. 132.5 LBS/SY)
   - ITEM_NO. 411-02.10 ACS MIX (PG70-22) GRADING D
2. TACK COAT
   - ITEM NO. 403-02.01 TRACKLESS TACK COAT (TC)
   - (APPROX. 0.05 - 0.10 GAL/SY.) GENERAL USE
   - (APPROX. 0.08 - 0.12 GAL/SY.) MILLING - COLD PLANE
3. ASPHALT BINDER AT 2.50 IN. THICK (APPROX. 226 LB/SY)
   - ITEM NO. 307-02.08 ASPHALT CONCRETE MIX (PG70-22) (BPMB-HM) GRADING B-M2
4. ASPHALTIC AGGREGATE BASE BINDER AT 4.00 IN. THICK (APPROX. 460 LBS/SY)
   - ITEM NO. 307-02.01 ASPHALT CONCRETE MIX (PG70-22) (BPMB-HM) GRADING A
5. MINERAL AGGREGATE BASE AT 12.00 IN. THICK
   - ITEM NO. 303-01 MINERAL AGGREGATE, TYPE A BASE, GRADING D
6. PRIME COAT
   - ITEM NO. 402-01 BITUMINOUS MATERIAL FOR PRIME COAT (PC)
   - (APPROX. 0.30 - 0.35 GAL/SY.)
   - ITEM NO. 402-02 AGGREGATE FOR COVER MATERIAL (PC)
   - (APPROX. 8 - 12 LBS/SY.)
7. ASPHALT AGGREGATE BASE AT 4.00 IN. THICK (APPROX. 360 LBS/SY)
   - ITEM NO. 307-02.02 ASPHALT CEMENT (PG70-22) (BPMB-HM) GRADING A-S
   - ITEM NO. 307-02.03 AGGREGATE (BPMB-HM) GRADING A-S
8. AGGREGATE UNDER DRAINS W/PIPE
   - ITEM NO. 710-02 AGGREGATE UNDERDRAINS (WITH PIPE)
   - TDOT STD. DWG. RD-UD-3
9. CONCRETE SIDEWALK
   - ITEM NO. 701-01.01 CONCRETE SIDEWALK (4 ")
   - SEE TDOT STD. DWG. MM-SW-1
   - ITEM NO. 303-01 MINERAL AGGREGATE, TYPE A BASE, GRADING D (4 ")
10. CONCRETE CURB AND GUTTER
    - ITEM NO. 702-03 CONCRETE COMBINED CURB & GUTTER
    - TDOT STD. DWG. RP-VC-10

SEALED BY

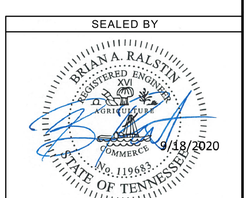

HISTORIC FRANKLIN TENNESSEE

CITY OF FRANKLIN
ENGINEERING DEPARTMENT

TYPICAL SECTIONS AND PAVEMENT SCHEDULE

9/21/2020 8:39:13 AM
Y:\Washville\16019000S\16019033.00\Eng_Docs\Roadway\002B.sht

TYPE	YEAR	PROJECT NO.	SHEET NO.
CONST.	2020	COF# 2019-0098	2B1

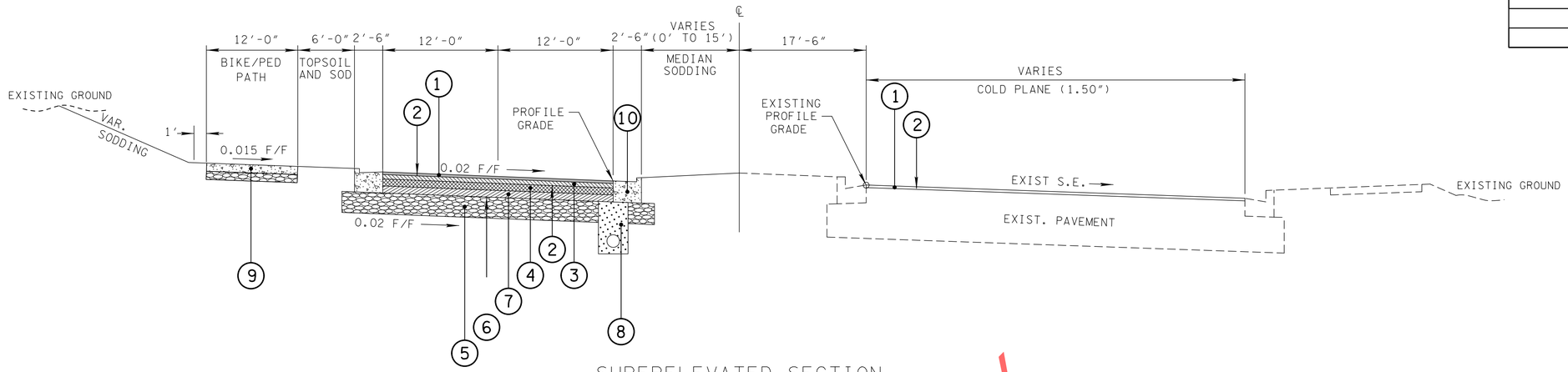

SUPERELEVATED SECTION

CAROTHERS PARKWAY STATION 313+45.00 TO 317+00.00

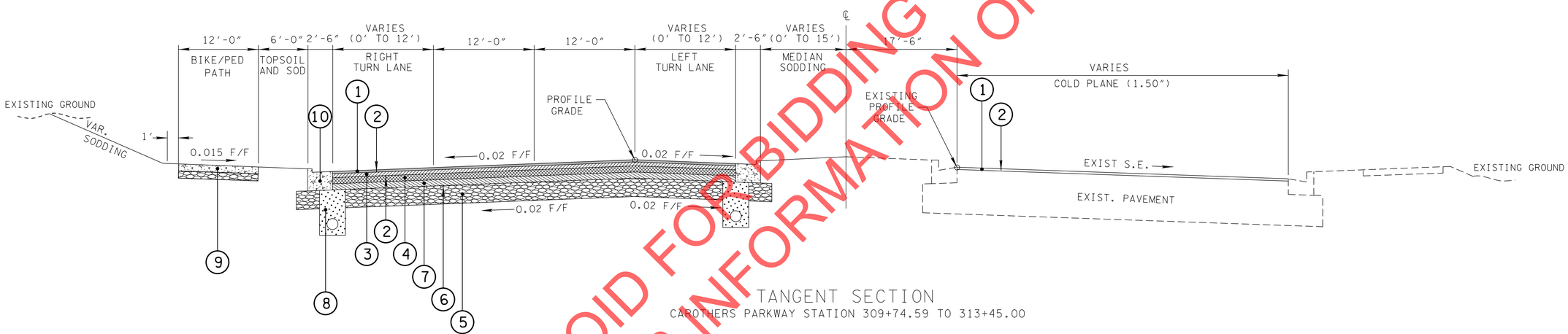

TANGENT SECTION

CAROTHERS PARKWAY STATION 309+74.59 TO 313+45.00

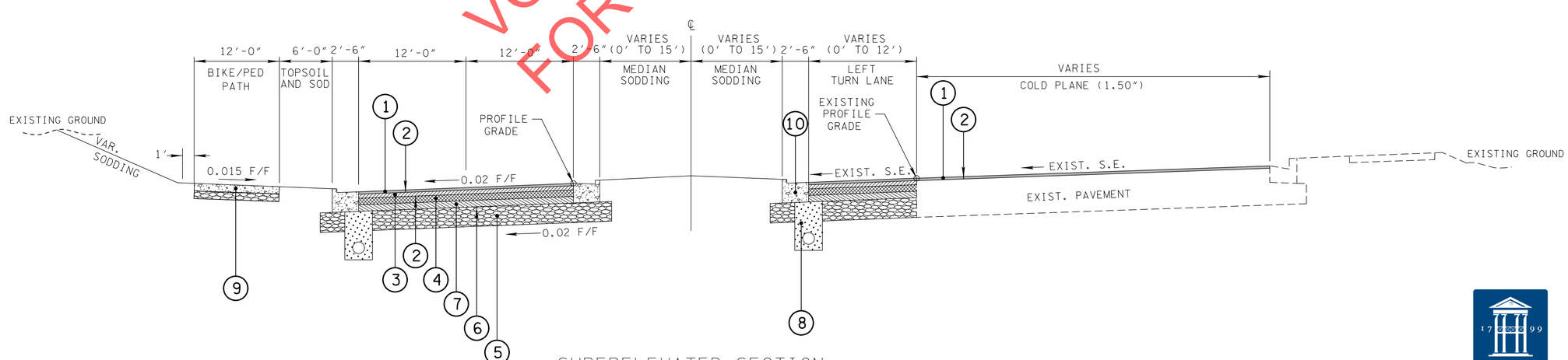

SUPERELEVATED SECTION

CAROTHERS PARKWAY STATION 306+93.91 TO 309+74.59

VOID FOR BIDDING
FOR INFORMATION ONLY

SEALED BY

BRIAN A. RALSTIN
REGISTERED ENGINEER
AGRICULTURE
COMMERCE
No. 119683
STATE OF TENNESSEE
9/18/2020

HISTORIC FRANKLIN TENNESSEE

CITY OF FRANKLIN
ENGINEERING DEPARTMENT

TYPICAL SECTIONS AND PAVEMENT SCHEDULE

9/21/2020 8:39:15 AM
Y:\Nashville\16019000S\16019033.00\Eng_Docs\Roadway\002B1.sht

TYPE	YEAR	PROJECT NO.	SHEET NO.
CONST.	2020	COF# 2019-0098	2B2

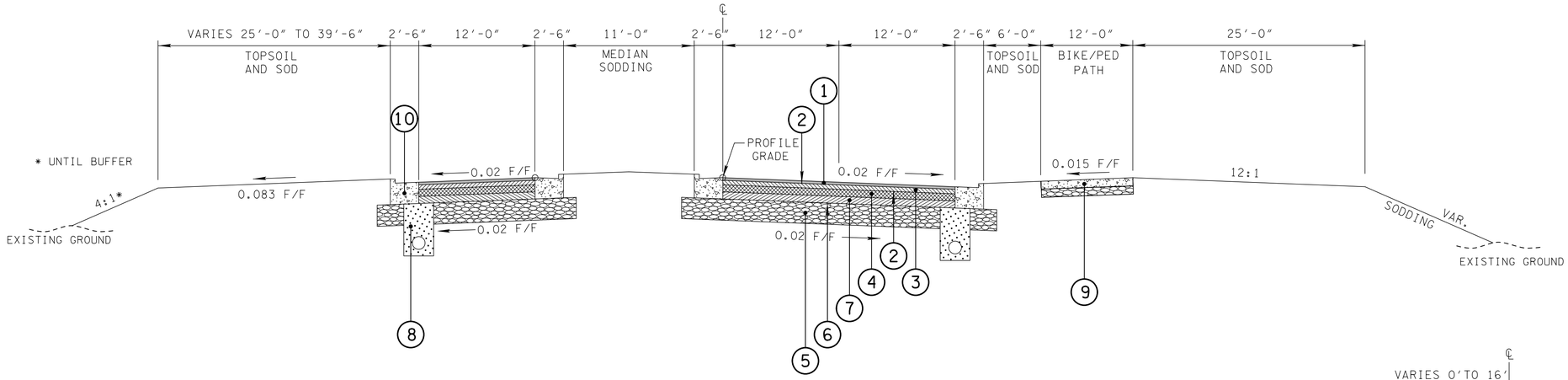

TANGENT SECTION

PARK ENTRANCE ROAD STATION 56+05.00 TO 57+63.00

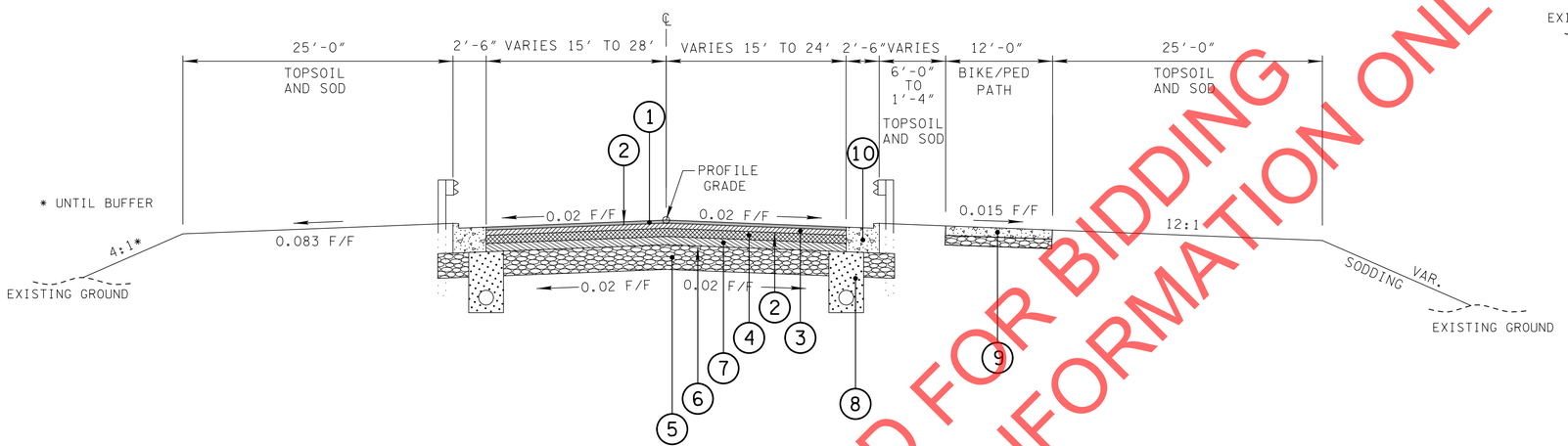

TANGENT SECTION

PARK ENTRANCE ROAD STATION 54+70.00 TO 56+05.00

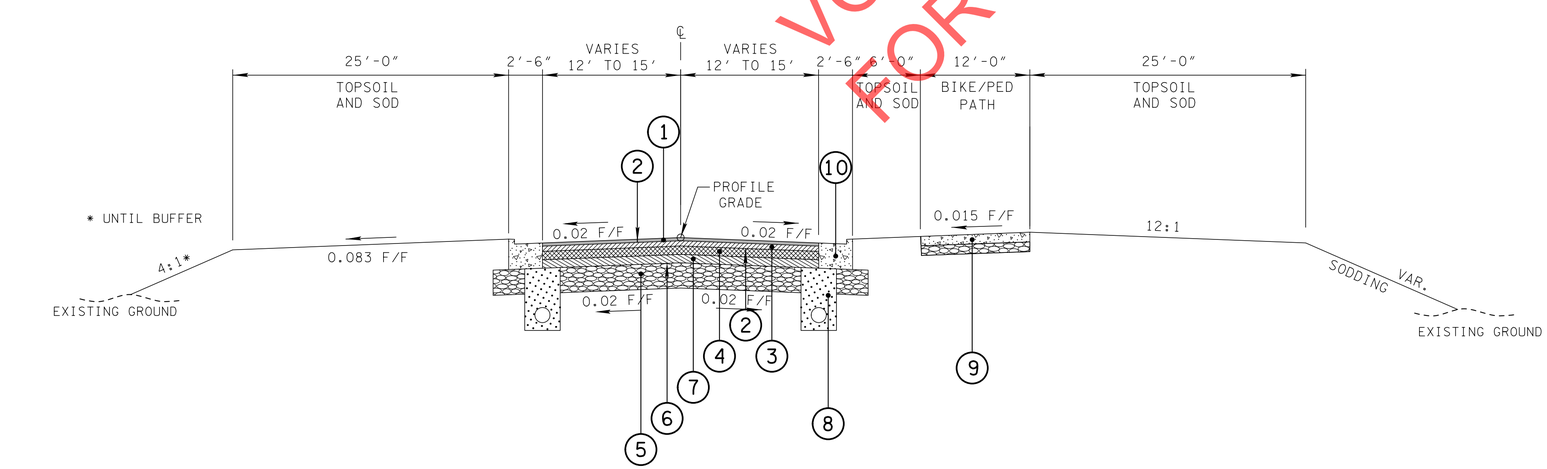

TANGENT SECTION

PARK ENTRANCE ROAD STATION 49+15.91 TO 49+42.00

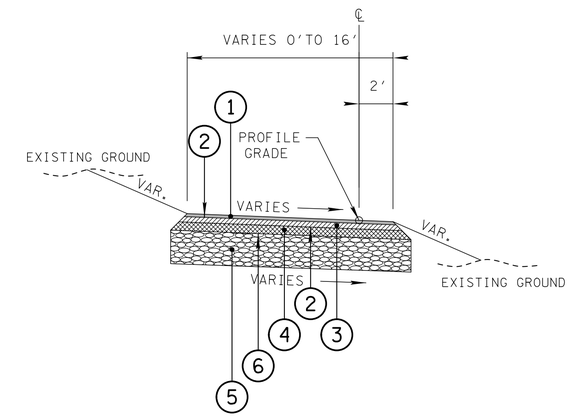

CROSSOVER SECTION

CAROTHERS PARKWAY LEFT STATION 302+24.22 TO 308+13.06

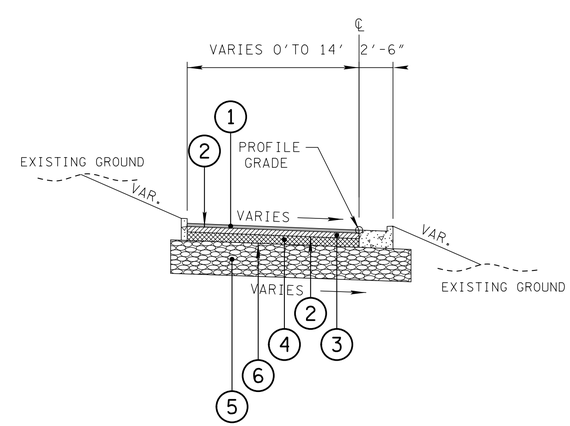

CROSSOVER SECTION

CAROTHERS PARKWAY LEFT STATION 312+30.47 TO 319+13.98

VOID FOR BIDDING
FOR INFORMATION ONLY

SEALED BY

BRIAN A. RALSTIN
REGISTERED ENGINEER
No. 119683
STATE OF TENNESSEE
9/18/2020

HISTORIC FRANKLIN TENNESSEE

CITY OF FRANKLIN
ENGINEERING DEPARTMENT

TYPICAL SECTIONS AND PAVEMENT SCHEDULE

9/21/2020 8:39:17 AM
Y:\Nashville\16019000S\16019033.00\Eng_Docs\Roadway\002B2.sht

TYPE	YEAR	PROJECT NO.	SHEET NO.
CONST.	2020	COF# 2019-0098	2C

GENERAL NOTES

GRADING

(1) ANY AREA THAT IS DISTURBED OUTSIDE LIMITS OF CONSTRUCTION DURING THE LIFE OF THIS PROJECT SHALL BE REPAIRED BY THE CONTRACTOR AT HIS EXPENSE.

(2) CERTIFICATION FOR ALL BORROW PITS MUST BE OBTAINED IN ACCORDANCE WITH SUBSECTION 107.06 OF THE STANDARD SPECIFICATIONS.

(3) THE CONTRACTOR SHALL NOT DISPOSE OF ANY MATERIAL EITHER ON OR OFF CITY-OWNED R.O.W. IN A REGULATORY FLOOD WAY AS DEFINED BY THE FEDERAL EMERGENCY MANAGEMENT AGENCY (FEMA) WITHOUT APPROVAL BY FEMA. ALL MATERIAL SHALL BE DISPOSED OF IN UPLAND (NON-WETLAND) AREAS AND ABOVE ORDINARY HIGH WATER OF ANY ADJACENT WATERCOURSE. THIS DOES NOT ELIMINATE THE NEED TO OBTAIN ANY OTHER LICENSES OR PERMITS THAT MAY BE REQUIRED BY ANY OTHER FEDERAL, STATE OR LOCAL AGENCY.

SEEDING AND SODDING

(1) SOD SHALL BE PLACED AT LOCATIONS SHOWN ON THE PLANS TO PREVENT DAMAGE TO ADJACENT FACILITIES AND PROPERTY DUE TO EROSION ON ALL NEWLY GRADED CUT AND FILL SLOPES AS WORK PROGRESSES.

(2) ITEM NO. 801-01, SEEDING (WITH MULCH), SHALL BE USED WHERE EROSION CONTROL BLANKET OR SOD ARE NOT APPLIED.

(3) ITEM NO. 801-02, SEEDING (WITHOUT MULCH) AND EROSION CONTROL BLANKET, SHALL BE PLACED AT LOCATIONS SHOWN ON THE PLANS AS WELL AS LOCATIONS DIRECTED BY THE ENGINEER.

GUARDRAIL

(1) THE PROPOSED GUARDRAIL, INCLUDING ANY ANCHOR SYSTEM, SHALL BE INSTALLED QUICKLY TO MINIMIZE TRAFFIC EXPOSURE TO ANY HAZARD. NO PAYMENT WILL BE MADE FOR A SECTION OF PROPOSED GUARDRAIL, INCLUDING ANCHORS, UNTIL IT IS COMPLETE IN PLACE.

(2) GUARDRAIL IS TO BE COMPLETE IN PLACE BEFORE THE MAINLINE ROADWAY IS OPENED TO TRAFFIC.

DRAINAGE

(1) THE CONTRACTOR SHALL SHAPE DITCHES TO THE SPECIFIED DESIGN. THIS WORK WILL NOT BE MEASURED AND PAID FOR DIRECTLY, BUT THE COST WILL BE INCLUDED IN THE COST OF OTHER ITEMS.

(2) EXCAVATION FOR THE ENCLOSED STORM SEWER INSTALLATION, EXISTING STORM SEWER MODIFICATIONS, AND ALL ENDWALL INSTALLATION WILL NOT BE MEASURED AND PAID FOR DIRECTLY, BUT WILL BE INCLUDED IN THE PRICE BID PER LINEAR FOOT OF PIPE (PIPE CULVERTS, STORM SEWERS, CONDUITS, ALL OTHER CULVERTS AND MINOR STRUCTURES).

(3) THE CUTTING OF INLET AND OUTLET DITCHES WHERE SHOWN ON PLANS OR AS DIRECTED BY THE ENGINEER WILL BE MEASURED AND PAID FOR AS ITEM NO. 203-01 ROAD AND DRAINAGE EXCAVATION (UNCLASSIFIED).

(4) DURING CONSTRUCTION OF DRAINAGE STRUCTURES ALL COST ASSOCIATED WITH MAINTAINING THE FLOW OF WATER AND TRAFFIC, AT THESE STRUCTURES, DURING THE PHASED CONSTRUCTION OF THIS PROJECT ARE TO BE INCLUDED IN THE UNIT PRICE OF THE DRAINAGE STRUCTURES AND TRAFFIC CONTROL ITEMS.

(5) ALL EXISTING PIPES AS SHOWN ON PLANS OR AS DIRECTED BY THE ENGINEER THAT ARE TO BE LEFT IN PLACE AND ABANDONED MUST BE BACKFILLED AND PLUGGED. ALL COST FOR THIS WORK SHALL NOT BE PAID FOR SEPARATELY BUT SHALL BE INCLUDED IN OTHER ITEMS.

FENCING

(1) LOCATION OF THE FENCE SHALL BE ONE FOOT INSIDE THE RIGHT-OF-WAY EXCEPT WHERE SHOWN ON THE PLANS.

(2) FENCES SHALL BE TURNED IN AT DRAINAGE STRUCTURES, STOCK PASSES AND BRIDGES WHERE DIRECTED BY THE ENGINEER SO AS TO ABUT WINGWALLS AND/OR ABUTMENTS.

(3) THE CONTRACTOR SHALL GIVE THE AFFECTED PROPERTY OWNERS TWO WEEKS NOTICE PRIOR TO CUTTING FENCES.

(4) THE CONTRACTOR SHALL BE REQUIRED TO INSTALL ACCESS CONTROL FENCES PRIOR TO CUTTING EXISTING STOCK FENCES IN AREAS UTILIZED BY DOMESTIC LIVESTOCK OR OTHER AREAS AS DIRECTED BY THE ENGINEER.

MISCELLANEOUS

(1) NOTHING IN THE GENERAL NOTES OR SPECIAL PROVISIONS SHALL RELIEVE THE CONTRACTOR FROM HIS RESPONSIBILITIES TOWARD THE SAFETY AND CONVENIENCE OF THE GENERAL PUBLIC AND THE RESIDENTS ALONG THE PROPOSED CONSTRUCTION AREA.

PAVEMENT MARKINGS

TEMPORARY PAVEMENT MARKINGS ON INTERMEDIATE LAYERS

(1) TEMPORARY PAVEMENT LINE MARKINGS ON INTERMEDIATE LAYERS OF PAVEMENT SHALL BE REFLECTIVE TAPE OR REFLECTORIZED PAINT INSTALLED TO PERMANENT STANDARDS AT THE END OF EACH DAYS WORK. SHORT, UNMARKED SECTIONS SHALL NOT BE ALLOWED. THESE MARKINGS WILL BE MEASURED AND PAID FOR UNDER ITEM NO. 716-05.01, PAINTED PAVEMENT MARKING (4" LINE), L.M.

(2) TEMPORARY PAVEMENT LINE MARKINGS ON INTERMEDIATE LAYERS OF PAVEMENT SHALL BE REFLECTIVE TAPE OR REFLECTORIZED PAINT INSTALLED TO PERMANENT STANDARDS AT THE END OF EACH DAYS WORK. SHORT, UNMARKED SECTIONS SHALL NOT BE ALLOWED. THESE MARKINGS WILL BE MEASURED AND PAID FOR UNDER ITEM NO. 716-05.02, PAINTED PAVEMENT MARKING (8" BARRIER LINE), L.F.

(3) WIDE (8 INCH) TEMPORARY PAVEMENT MARKING LINE WILL BE MEASURED AND PAID FOR UNDER ITEM NO. 716-05.02 PAINTED PAVEMENT MARKING (8" BARRIER LINE), L.F.

FINAL PAVEMENT MARKING

(4) THE CONTRACTOR WILL BE REQUIRED TO PERFORM THE FOLLOWING WORK:

a. REMOVE ALL GARBAGE AND CONSTRUCTION DEBRIS FROM PROJECT. THE COST FOR THIS WILL BE INCLUDED IN THE PRICE BID FOR OTHER ITEMS OF CONSTRUCTION.

(5) ALL PAVEMENT MARKINGS ON CONCRETE BRIDGE DECK SURFACE SHALL BE 3M STAMARK HIGH PERFORMANCE TAPE SERIES 380AW WILL BE MEASURED AND PAID FOR UNDER ITEM 716-10.23 PREFORMED PLASTIC PAVEMENT MARKING 4IN LINE WITH 1.5IN BLACK SILOUHETTE. ALL PAVEMENT MARKINGS ON ASPHALT DRIVING SURFACE SHALL BE ENHANCED FLATLINE THERMOPLASTIC PAVEMENT MARKINGS. SHORT UNMARKED SECTIONS SHALL NOT BE ALLOWED. PAVEMENT MARKINGS WILL BE MEASURED AND PAID FOR WITH THE ITEM NUMBERS SHOWN IN THE QUANTITIES.

SNOWPLOWABLE REFLECTIVE PAVEMENT MARKERS

(1) REMOVE EXISTING SNOWPLOWABLE MARKERS PRIOR TO PAVING AND/OR COLD PLANING. REMOVE ALL ADHESIVES PRIOR TO PAVING. PATCH ANY HOLES OR DIVOTS RESULTING FROM THE REMOVAL OF A MARKER IN A MANNER WHICH ENSURES A UNIFORM PAVED SURFACE. PATCH WORK SHALL BE INCLUDED WITH COST OF OTHER ITEMS OF CONSTRUCTION.

PAVING

(1) THE CONTRACTOR SHALL BE REQUIRED TO PAVE IN THE DIRECTION OF TRAFFIC.

(2) THE CONTRACTOR SHALL BE REQUIRED TO COLD PLANE AND PAVE IN THE DIRECTION OF TRAFFIC.

(3) THE CONTRACTOR SHALL ATTACH A DEVICE TO THE SCREED OF THE PAVER SUCH THAT MATERIAL IS CONFINED AT THE END GATE AND EXTRUDES THE ASPHALT MATERIAL IN SUCH A WAY THAT RESULTS IN A CONSOLIDATED WEDGE-SHAPE PAVEMENT EDGE OF APPROXIMATELY 25 TO 30 DEGREES AS IT LEAVES THE PAVER (MEASURED FROM A LINE PARALLEL TO THE PAVEMENT SURFACE.) THE DEVICE SHALL MEET THE REQUIREMENTS THAT ARE CURRENTLY SET FORTH IN SPECIAL PROVISION 407SE.

SIGNING

(1) THE LETTERS, DIGITS, ARROWS, BORDERS, AND ALPHABET ACCESSORIES ON ALL FLAT SHEET SIGNS SHALL BE APPLIED BY SILK SCREENING PROCESS, EXCEPT THAT CUTOUT DIRECT APPLIED COPY SHALL BE USED ON ALL FLAT SHEET SIGNS WITH A GREEN BACKGROUND. THE LETTERS, DIGITS, ARROWS, BORDERS, AND ALPHABET ACCESSORIES ON ALL EXTRUDED PANEL SIGNS SHALL BE DEMOUNTABLE AND ATTACHED TO THE SIGN FACE, AS OUTLINED IN THE STANDARD SPECIFICATIONS. ALL SHIELDS ON GUIDE SIGNS SHALL BE DEMOUNTABLE AND ATTACHED TO THE SIGN FACE AS OUTLINED IN THE STANDARD SPECIFICATIONS.

(2) THE LENGTHS OF ALL SIGN SUPPORTS SHOWN ON THE SIGN SCHEDULE ARE APPROXIMATE AND ARE FOR ESTIMATING PURPOSES ONLY. THE LENGTHS WERE COMPUTED FROM THE CROSS-SECTIONS CONTAINED IN THE CONSTRUCTION PLANS. IN THE EVENT THE SUPPORT LENGTHS ARE 2 FEET SHORTER OR LONGER THAN SHOWN ON THE PLANS, THE ENGINEER SHALL VERIFY THE SUPPORT TYPE WITH THE CITY OF FRANKLIN. THE CONTRACTOR SHALL VERIFY ALL SUPPORT LENGTHS AT THE SITE PRIOR TO ORDERING MATERIAL.

(3) THE TOP OF THE SIGN FOOTINGS SHALL BE PLACED LEVEL WITH THE GROUND LINE.

(4) AFTER THE SIGN LOCATIONS HAVE BEEN STAKED, BUT PRIOR TO ORDERING ANY MATERIAL FOR THE SUPPORTS, THERE SHALL BE A FIELD INSPECTION AND APPROVAL BY THE ENGINEER.

(5) ALL SIGNS MARKED "TO BE REMOVED" ARE TO BE REMOVED BY THE CONTRACTOR AND PAID FOR UNDER ITEM 713-15 AND BECOME THE PROPERTY OF THE CITY OF FRANKLIN.

(6) THE EXISTING FOOTINGS ARE TO BE REMOVED 6 INCHES BELOW GROUND LINE.

(7) THE LETTERS, DIGITS, ARROWS, BORDERS, AND ALPHABET ACCESSORIES ON ALL FLAT SHEET SIGNS SHALL BE APPLIED BY SILK SCREENING PROCESS, EXCEPT THAT CUT-OUT DIRECT APPLIED COPY SHALL BE USED ON ALL FLAT SHEET SIGNS WITH A GREEN BACKGROUND, OR BROWN BACKGROUND.

(8) THE LENGTHS OF ALL SIGN SUPPORTS SHOWN ON THE SIGN SCHEDULE ARE APPROXIMATE AND ARE FOR ESTIMATING PURPOSES ONLY. THE CONTRACTOR SHALL VERIFY ALL SUPPORT LENGTHS AT THE SITE PRIOR TO ERECTION.

(9) THE LETTERS, DIGITS, ARROWS, BORDERS, AND ALPHABET ACCESSORIES ON ALL FLAT SHEET SIGNS SHALL BE APPLIED BY SILK SCREENING PROCESS.

(10) ALL SIGNS WHICH INTERFERE WITH CONSTRUCTION WILL BE RELOCATED OUTSIDE LIMITS OF CONSTRUCTION BY THE CONTRACTOR. UPON COMPLETION OF CONSTRUCTION, THE CONTRACTOR WILL RESTORE THE SIGNS TO ORIGINAL LOCATION. THE CONTRACTOR SHALL CHECK WITH THE ENGINEER PRIOR TO MOVING ANY PERMANENT SIGNS.

CONSTRUCTION WORK ZONE & TRAFFIC CONTROL

(1) ADVANCED WARNING SIGNS SHALL NOT BE DISPLAYED MORE THAN FORTY-EIGHT (48) HOURS BEFORE PHYSICAL CONSTRUCTION BEGINS. SIGNS MAY BE ERECTED UP TO ONE WEEK BEFORE NEEDED, IF THE SIGN FACE IS FULLY COVERED.

(2) IF THE CONTRACTOR MOVES OFF THE PROJECT, HE SHALL COVER OR REMOVE ALL UNNEEDED SIGNS AS DIRECTED BY THE ENGINEER. COSTS OF REMOVAL, COVERING, AND REINSTALLING SIGNS SHALL NOT BE MEASURED AND PAID FOR SEPARATELY, BUT ALL COSTS SHALL BE INCLUDED IN THE ORIGINAL UNIT PRICE BID FOR ITEM NO 712-06, SIGNS (CONSTRUCTION) PER SQUARE FOOT.

(3) A LONG TERM BUT SPORADIC USE WARNING SIGN, SUCH AS A FLAGGER SIGN, MAY REMAIN IN PLACE WHEN NOT REQUIRED PROVIDED THE SIGN FACE IS FULLY COVERED.

(4) TRAFFIC CONTROL DEVICES SHALL NOT BE DISPLAYED OR ERECTED UNLESS RELATED CONDITIONS ARE PRESENT NECESSITATING WARNING.

(5) USE OF BARRICADES, PORTABLE BARRIER RAILS, AND DRUMS SHALL BE LIMITED TO THE IMMEDIATE AREAS OF CONSTRUCTION WHERE A HAZARD IS PRESENT. THESE DEVICES SHALL NOT BE STORED ALONG THE ROADWAY WITHIN THIRTY (30) FEET OF THE EDGE OF THE TRAVELED WAY BEFORE OR AFTER USE UNLESS PROTECTED BY GUARDRAIL, BRIDGE RAIL, AND/OR BARRIERS INSTALLED FOR OTHER PURPOSES FOR ROADWAYS WITH CURRENT ADT'S LESS THAN 1500 AND DESIGN SPEED OF LESS THAN 60 MPH. THIS DISTANCE SHALL INCREASE TO FORTY-FIVE (45) FEET FOR ROADWAYS WITH CURRENT ADT'S OF 1500 OR GREATER AND DESIGN SPEED OF 60 MPH OR GREATER OR ON THE OUTSIDE OF A HORIZONTAL CURVE. THESE DEVICES SHALL BE REMOVED FROM THE CONSTRUCTION WORK ZONE WHEN THE ENGINEER DETERMINES THEY ARE NO LONGER NEEDED. WHERE THERE IS INSUFFICIENT RIGHT-OF-WAY TO PROVIDE FOR THIS REQUIRED SETBACK, THE CONTRACTOR SHALL

WIP FOR BIDDING
FOR INFORMATION ONLY

SEALED BY

BRIAN A. RALSTIN
REGISTERED ENGINEER
No. 119683
AGRICULTURE COMMERCE
STATE OF TENNESSEE
9/18/2020

HISTORIC FRANKLIN TENNESSEE

CITY OF FRANKLIN
ENGINEERING DEPARTMENT

GENERAL NOTES

TYPE	YEAR	PROJECT NO.	SHEET NO.
CONST.	2020	COF# 2019-0098	2C1

DETERMINE THE ALTERNATE LOCATIONS AND REQUEST THE ENGINEER'S APPROVAL TO USE THEM.

(6) THE CONTRACTOR SHALL NOT BE PERMITTED TO PARK ANY VEHICLES OR CONSTRUCTION EQUIPMENT DURING PERIODS OF INACTIVITY, WITHIN THIRTY (30) FEET OF THE EDGE OF PAVEMENT WHEN THE LANE IS OPEN TO TRAFFIC UNLESS PROTECTED BY GUARDRAIL, BRIDGE RAIL, AND/OR BARRIERS INSTALLED FOR OTHER PURPOSES FOR ROADWAYS WITH CURRENT ADT'S LESS THAN 1500 AND DESIGN SPEED OF LESS THAN 60 MPH. THIS DISTANCE SHALL BE INCREASED TO FORTY-FIVE (45) FEET FOR ROADWAYS WITH CURRENT ADT'S OF 1500 OR GREATER AND DESIGN SPEED OF 60 MPH OR GREATER OR ON THE OUTSIDE OF A HORIZONTAL CURVE. PRIVATELY OWNED VEHICLES SHALL NOT BE ALLOWED TO PARK WITHIN THIRTY (30) FEET OF AN OPEN TRAFFIC LANE AT ANY TIME UNLESS PROTECTED AS DESCRIBED ABOVE FOR ROADWAYS WITH CURRENT ADT'S LESS THAN 1500 AND DESIGN SPEED OF LESS THAN 60 MPH. THIS DISTANCE SHALL BE INCREASED TO FORTY-FIVE (45) FEET FOR ROADWAYS WITH CURRENT ADT'S OF 1500 OR GREATER AND DESIGN SPEED OF 60 MPH OR GREATER OR ON THE OUTSIDE OF A HORIZONTAL CURVE. WHERE THERE IS INSUFFICIENT RIGHT-OF-WAY TO PROVIDE FOR THIS REQUIRED SETBACK, THE CONTRACTOR SHALL DETERMINE THE ALTERNATE LOCATIONS AND REQUEST THE ENGINEER'S APPROVAL TO USE THEM.

(7) ALL DETOUR AND CONSTRUCTION SIGNING SHALL BE IN STRICT ACCORDANCE WITH THE MANUAL ON UNIFORM TRAFFIC CONTROL DEVICES.

(8) ALL DETOURS SHALL BE PAVED, STRIPED, SIGNED, AND FLEXIBLE DRUMS ARE TO BE IN PLACE BEFORE IT IS OPENED TO TRAFFIC.

(9) THE CONTRACTOR SHALL BE RESPONSIBLE FOR STAKING CONSTRUCTION SIGNS. THE COST OF THIS WORK SHALL BE INCLUDED IN ITEM NO. 712-06, SIGNS (CONSTRUCTION), S.F.

NATURAL RESOURCES

(1) SOIL MATERIALS MUST BE PREVENTED FROM ENTERING WATERS OF THE STATE/U.S. EPSC MEASURES TO PROTECT NATURAL RESOURCES AND WATER QUALITY SHALL BE MAINTAINED THROUGHOUT THE CONSTRUCTION PERIOD. APPROPRIATE EPSC MEASURES MUST BE INSTALLED ALONG THE BASE OF ALL FILLS AND CUTS, ON THE DOWNHILL SIDE OF STOCKPILED SOIL, AND ALONG NATURAL RESOURCES IN CLEARED AREAS TO PREVENT SEDIMENT MIGRATION INTO STREAMS, WETLANDS OR OTHER NATURAL FEATURES IN ACCORDANCE WITH CITY STANDARDS. EPSC MEASURES SHALL BE INSTALLED ON THE CONTOUR, ENTRENCHED AND STAKED, AND EXTEND THE WIDTH OF THE AREA TO BE CLEARED.

(2) NEW CHANNEL CONSTRUCTION SHALL BE COMPLETED IN THE DRY AND STABILIZED FOR AT LEAST 72 HOURS PRIOR TO DIVERTING WATER FROM THE EXISTING AND/OR TEMPORARY CHANNEL.

(3) THE OPERATION OF EQUIPMENT IN WATERS OF THE STATE/U.S., INCLUDING WETLANDS AND EPHEMERAL, INTERMITTENT, AND PERENNIAL STREAMS, IS NOT ALLOWED.

(4) THE WIDTH OF THE FILL ASSOCIATED WITH TEMPORARY CROSSINGS SHALL BE LIMITED TO THE MINIMUM NECESSARY FOR THE ACTUAL CROSSING, NOT TO EXCEED THE WIDTH SPECIFIED IN THE STANDARD DRAWING.

(5) STREAM BEDS SHALL NOT BE USED AS TRANSPORTATION ROUTES FOR CONSTRUCTION EQUIPMENT. TEMPORARY CULVERT CROSSINGS SHALL BE LIMITED TO ONE POINT PER STREAM AND EPSC MEASURES SHALL BE USED WHERE THE STREAM BANKS ARE DISTURBED. WHERE THE STREAMBED IS NOT COMPOSED OF BEDROCK, A PAD OF CLEAN ROCK SHALL BE USED AT THE CROSSING POINT AND CULVERTED TO PREVENT THE IMPOUNDMENT OF WATER FLOW. CLEAN ROCK IS ROCK OF VARIOUS TYPE AND SIZE, DEPENDING UPON APPLICATION, WHICH CONTAINS NO FINES, SOILS, OR OTHER WASTES OR CONTAMINANTS. OTHER MATERIALS USED FOR ALL TEMPORARY FILLS SHALL BE COMPLETELY REMOVED IN THEIR ENTIRETY AFTER THE WORK IS COMPLETED AND THE AFFECTED AREAS RETURNED TO PREEXISTING ELEVATIONS. ALL TEMPORARY CROSSINGS SHALL BE CONSTRUCTED IN ACCORDANCE WITH STD. DWG. EC-STR-25 UNLESS SPECIFICALLY ADDRESSED IN THE EPSC PLANS. ALTERNATIVELY, PLACING A TEMPORARY BRIDGE (E.G. BAILEY BRIDGE OR EQUIVALENT, TIMBERS, ETC.) FROM TOP OF BANK TO TOP OF BANK OR THE APPROPRIATE USE OF BARGES AT THE CROSSING TO AVOID DISTURBANCE OF THE STREAMBED IS AN ACCEPTABLE OPTION.

(6) HEAVY EQUIPMENT WORKING IN WETLANDS WITH PERMITTED TEMPORARY IMPACTS SHALL BE PLACED ON MATS, OR OTHER MEASURES MUST BE TAKEN TO MINIMIZE SOIL DISTURBANCE AND COMPACTION UNLESS SPECIFICALLY ADDRESSED IN THE CONSTRUCTION PLANS. ANY MATS AND OTHER MEASURES USED FOR HEAVY EQUIPMENT SHALL BE REMOVED IN THEIR ENTIRETY AFTER THE WORK IS COMPLETED. ALL AFFECTED AREAS SHOULD BE RETURNED TO PRE-EXISTING CONDITIONS.

(7) WETLANDS SHALL NOT BE USED AS EQUIPMENT STORAGE, STAGING, OR TRANSPORTATION AREAS, UNLESS SPECIFICALLY PROVIDED FOR IN THE CONSTRUCTION PLANS AND PERMITS.

(8) THE CONTRACTOR SHALL TAKE APPROPRIATE STEPS PRIOR TO ANY CONSTRUCTION AND MAINTENANCE ACTIVITIES TO ENSURE THAT ENVIRONMENTAL FEATURES (E.G., STREAMS, WETLANDS, SPRINGS, ETC.) ARE NOT IMPACTED BEYOND PERMITTED LOCATIONS. IF THE CONTRACTOR OR CITY INSPECTOR IS UNSURE OF THE IDENTITY OF AN ENVIRONMENTAL FEATURE, THE INSPECTOR SHALL CONTACT THE CITY IMMEDIATELY.

SPECIES

(1) NO ACTIVITY MAY SUBSTANTIALLY DISRUPT THE MOVEMENT OF THOSE SPECIES OF AQUATIC LIFE INDIGENOUS TO THE WATER BODY, INCLUDING THOSE SPECIES THAT NORMALLY MIGRATE THROUGH THE AREA.

INSPECTION, MAINTENANCE & REPAIR

(2) REFER TO THE STORM WATER POLLUTION AND PREVENTION PLAN SHEETS (S-1) FOR SWPPP, PERMITS, AND RECORDS NOTES.

PERMITS, PLANS & RECORDS

(3) THE CONTRACTOR SHALL BE SOLELY RESPONSIBLE FOR AND OBTAIN ANY NECESSARY ENVIRONMENTAL PERMITS OR APPROVALS, INCLUDING BUT NOT LIMITED TO ARCHAEOLOGY, ECOLOGY, HISTORICAL, HAZARDOUS MATERIALS, AIR AND NOISE, TDEC ARAP/401, USACE SECTION 404, TVA SECTION 26A, AND TDEC NPDES PERMITS, FROM FEDERAL, STATE AND/OR LOCAL AGENCIES REGARDING ANY MATERIAL AND STAGING AREAS AND THE OPERATION OF ANY PROJECT-DEDICATED ASPHALT AND/OR CONCRETE PLANTS TO BE USED. ANY SUCH PERMITS SHALL BE SUPPLIED TO THE CITY PROJECT RESPONSIBLE PARTY PRIOR TO THE USE OF THE PERMITTED AREA(S).

(4) ANY DISAGREEMENT BETWEEN THE CONSTRUCTION PLANS, THE PROJECT AS CONSTRUCTED, AND THE PERMIT(S) ISSUED FOR THE PROJECT, SHALL BE BROUGHT TO THE ATTENTION OF THE CITY PROJECT RESPONSIBLE PARTY. THE CITY SHALL BE CONTACTED IN THESE INSTANCES AND DECIDE WHICH HAS PRECEDENCE AND WHETHER PERMIT OR PLANS REVISIONS ARE NEEDED. IN GENERAL, PERMIT CONDITIONS WILL PREVAIL.

(5) IF A CHANGE IN PROJECT SCOPE OCCURS DURING CONSTRUCTION, INCLUDING VALUE ENGINEERING, THE CITY SHALL BE CONTACTED TO DETERMINE WHETHER PERMIT REVISIONS ARE NEEDED.

(6) THE CONTRACTOR SHALL REVIEW ALL EXISTING PERMITS TO ENSURE THAT WORK AT PERMITTED SITES DOES NOT EXCEED EXPIRATION DATE. IF WORK IS GOING TO BE CONTINUED AFTER EXPIRATION DATES, THE CONTRACTOR SHALL CONTACT THE CITY PROJECT RESPONSIBLE PARTY TO COMMENCE PERMIT RENEWAL PROCESS.

(7) ALL WATER QUALITY PERMITS SHALL BE POSTED NEAR THE MAIN ENTRANCE OF THE CONSTRUCTION SITE ACCESSIBLE TO THE PUBLIC. THE NAME, COMPANY NAME, EMAIL ADDRESS, TELEPHONE NUMBER AND ADDRESS OF THE PROJECT SITE OWNER, OPERATOR, OR A LOCAL CONTACT PERSON WITH A BRIEF DESCRIPTION OF THE PROJECT SHALL ALSO BE POSTED. IF POSTING THIS INFORMATION NEAR A MAIN ENTRANCE IS INFEASIBLE, THE INFORMATION SHALL BE PLACED IN A PUBLICLY ACCESSIBLE LOCATION NEAR WHERE THE CONSTRUCTION IS ACTIVELY UNDERWAY AND MOVED AS NECESSARY. THIS LOCATION SHALL BE POSTED AT THE CONSTRUCTION SITE. ALL POSTINGS SHALL BE MAINTAINED IN LEGIBLE CONDITION.

GOOD HOUSEKEEPING MEASURES & WASTE DISPOSAL

(1) THE CONTRACTOR SHALL ESTABLISH AND MAINTAIN A PROACTIVE METHOD TO PREVENT LITTER AND CONSTRUCTION WASTES FROM ENTERING WATERS OF THE STATE/U.S. THESE MATERIALS SHALL BE REMOVED FROM STORMWATER EXPOSURE PRIOR TO ANTICIPATED STORM EVENTS OR BEFORE BEING CARRIED OFFSITE BY WIND, OR OTHERWISE PREVENTED FROM BECOMING A POLLUTANT SOURCE FOR STORMWATER DISCHARGES. AFTER USE, MATERIALS USED FOR EPSC SHALL BE REMOVED FROM THE SITE.

(2) THE CONTRACTOR SHALL TAKE APPROPRIATE STEPS TO ENSURE THAT PETROLEUM PRODUCTS OR OTHER CHEMICAL POLLUTANTS ARE PREVENTED FROM ENTERING WATERS OF THE STATE/U.S. ALL EQUIPMENT REFUELING, SERVICING, AND STAGING AREAS SHALL COMPLY WITH ALL LOCAL, STATE, AND FEDERAL LAWS, RULES, REGULATIONS, AND ORDINANCES, INCLUDING THOSE OF THE NATIONAL FIRE PROTECTION ASSOCIATION. APPROPRIATE CONTAINMENT MEASURES FOR THESE AREAS SHALL BE USED.

(3) CONTRACTORS SHALL PROVIDE DESIGNATED TRUCK WASHOUT AREAS ON THE SITE. THESE AREAS MUST BE SELF CONTAINED, NOT CONNECTED TO ANY STORMWATER OUTLET OF THE SITE, AND PROPERLY SIGNED. WASH DOWN OR WASTE DISCHARGE OF CONCRETE TRUCKS SHALL NOT BE PERMITTED ONSITE UNLESS PROPER SETTLEMENT AREAS HAVE BEEN PROVIDED IN ACCORDANCE WITH BOTH STATE AND FEDERAL REGULATIONS.

(4) WHEEL WASH WATER SHALL BE COLLECTED AND ALLOWED TO SETTLE OUT SUSPENDED SOLIDS PRIOR TO DISCHARGE. WHEEL WASH WATER SHALL NOT BE DISCHARGED DIRECTLY INTO ANY STORMWATER SYSTEM OR STORMWATER TREATMENT SYSTEM.

(5) IF PORTABLE SANITARY FACILITIES ARE PROVIDED ON CONSTRUCTION SITES, SANITARY WASTE SHALL BE COLLECTED FROM THE PORTABLE UNITS IN A TIMELY MANNER BY A LICENSED WASTE MANAGEMENT CONTRACTOR OR AS REQUIRED BY ANY REGULATIONS. THE CONTRACTOR SHALL OBTAIN ANY AND ALL NECESSARY PERMITS TO DISPOSE OF SANITARY WASTE.

(6) ONLY CONSTRUCTION PRODUCTS NEEDED SHALL BE STORED ONSITE BY THE CONTRACTOR. THE CONTRACTOR SHALL STORE ALL MATERIALS UNDER COVER AND IN APPROPRIATE CONTAINERS. PRODUCTS MUST BE STORED IN ORIGINAL CONTAINERS AND LABELED. MATERIAL MIXING SHALL BE CONDUCTED IN ACCORDANCE WITH THE MANUFACTURER'S RECOMMENDATIONS. THE CONTRACTOR'S RESPONSIBLE PARTY SHALL INSPECT MATERIALS STORAGE AREAS REGULARLY TO ENSURE PROPER USE AND DISPOSAL.

(7) WHEN POSSIBLE, ALL PRODUCTS SHALL BE USED COMPLETELY BEFORE PROPERLY DISPOSING OF THE CONTAINER OFFSITE. THE MANUFACTURER'S DIRECTIONS FOR DISPOSAL OF MATERIALS AND CONTAINERS SHALL BE FOLLOWED.

(8) ALL PAINT CONTAINERS SHALL BE TIGHTLY SEALED AND STORED WHEN NOT REQUIRED FOR USE. EXCESS PAINT SHALL BE DISPOSED OF ACCORDING TO THE MANUFACTURER'S INSTRUCTIONS AND APPLICABLE STATE AND LOCAL REGULATIONS.

(9) ALL HAZARDOUS WASTE MATERIALS SHALL BE DISPOSED OF IN A MANNER WHICH IS COMPLIANT WITH LOCAL OR STATE REGULATIONS. SITE PERSONNEL SHALL BE INSTRUCTED IN THESE PRACTICES, AND THE INDIVIDUAL DESIGNATED AS THE CONTRACTOR'S RESPONSIBLE PARTY SHALL BE RESPONSIBLE FOR SEEING THAT THESE PRACTICES ARE FOLLOWED. THE CONTRACTOR SHALL OBTAIN ANY AND ALL NECESSARY PERMITS TO DISPOSE OF HAZARDOUS MATERIAL.

(10) OPEN BURNING IS PROHIBITED UNLESS IT IS SPECIFICALLY ALLOWED BY LAW. IF ALLOWED, NATURAL VEGETATION, TREES, AND UNTREATED LUMBER SHALL BE THE ONLY MATERIALS THAT CAN BE OPEN BURNED. THE CONTRACTOR SHALL BE RESPONSIBLE FOR OBTAINING ALL APPLICABLE STATE AND LOCAL PERMITS PRIOR TO ANY BURNING.

(11) DISPOSAL OF ONSITE VEGETATION AND TREES BY CHIPPING THEM INTO MULCH IS PREFERABLE TO OPEN BURNING. THIS MULCH MAY BE USED AS AN ONSITE SOIL STABILIZATION MEASURE WHERE APPROPRIATE.

(12) WASTE MATERIAL (EARTH, ROCK, ASPHALT, CONCRETE, ETC.) NOT REQUIRED FOR THE CONSTRUCTION OF THE PROJECT WILL BE DISPOSED OF BY THE CONTRACTOR. IMPACTS TO WATERS OF THE STATE/U.S. SHALL BE AVOIDED IF POSSIBLE. IF UNAVOIDABLE, THE CONTRACTOR WILL OBTAIN ANY AND ALL NECESSARY PERMITS INCLUDING, BUT NOT LIMITED TO NPDES, AQUATIC RESOURCES ALTERATION PERMIT(S), CORPS OF ENGINEERS SECTION 404 PERMITS, AND TVA SECTION 26A PERMITS TO DISPOSE OF WASTE MATERIALS.

SUPPORT ACTIVITIES

(1) MATERIALS AND STAGING AREAS SHALL NOT AFFECT ANY WATERS OF THE STATE/U.S. UNLESS THESE AREAS ARE SPECIFICALLY COVERED BY ENVIRONMENTAL PERMITS, OBTAINED SOLELY BY THE CONTRACTOR. THE CONTRACTOR SHALL REVIEW ALL EXISTING PERMITS TO ENSURE THAT WORK AT PERMITTED SITES DOES NOT EXCEED EXPIRATION DATES. IF WORK IS GOING TO BE CONTINUED AFTER EXPIRATION DATES, THE CONTRACTOR SHALL CONTACT THE CITY PROJECT RESPONSIBLE PARTY TO COMMENCE PERMIT RENEWAL PROCESS.

(2) MATERIALS AND STAGING AREAS SHALL BE LOCATED IN NON-WETLAND AREAS AND ABOVE THE 100-YEAR, FEDERAL EMERGENCY MANAGEMENT AGENCY FLOODPLAIN.

(3) IT WILL BE THE RESPONSIBILITY OF THE CONTRACTOR TO SUPPLY EPSC PLANS FOR THE MATERIAL AND STAGING AREAS TO THE CITY FOR REVIEW.

NOT FOR BIDDING
FOR INFORMATION ONLY

SEALED BY

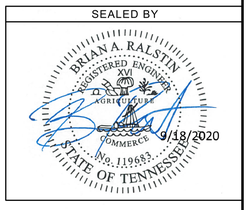

HISTORIC FRANKLIN TENNESSEE

CITY OF FRANKLIN
ENGINEERING DEPARTMENT

GENERAL NOTES

9/21/2020 8:39:32 AM
Y:\Nashville\16019000S\16019033.00\Eng_Docs\Roadway\002C1.sht

TYPE	YEAR	PROJECT NO.	SHEET NO.
CONST.	2020	COF# 2019-0098	2D

CATCH BASINS

SHEET NO.	LOCATION	STATION	OFFSET (FT.)	DRAINAGE CODE	GRATE/TOP ELEV.	STRUCTURE TYPE	INSIDE DIMENSIONS	DEPTH (FT.)	STANDARD DRAWING	PAY ITEMS							
										TYPE 12 611-12.01 0' - 4'	TYPE 12 611-12.02 4' - 8'	TYPE 12 611-12.03 8' - 12'	TYPE 14 611-14.02 4' - 8'	TYPE 14 611-14.03 8' - 12'	TYPE 42 611-42.01 0' - 4'	TYPE 42 611-42.02 4' - 8'	TYPE 42 611-42.03 8' - 12'
4D	CAROTHERS	304+80.00	-43.5	3	654.66	#12	4X3	5.84	D-CB-12P		1						
4D	CAROTHERS	305+80.00	-43.5	9	653.93	#12	4X3	5.96	D-CB-12P		1						
4D	CAROTHERS	306+80.00	-43.5	12	653.19	#12	4X3	4.37	D-CB-12P		1						
4D	CAROTHERS	307+80.00	-43.5	14	652.46	#12	4X3	5.58	D-CB-12P		1						
4D	CAROTHERS	307+80.00	4.7	15	652.70	#12	4X3	6.76	D-CB-12P		1						
4D	CAROTHERS	308+40.00	3.5	17	652.26	#12	4X3	5.34	D-CB-12P		1						
4D	CAROTHERS	308+90.00	-43.5	20	651.66	#12	4X3	3.92	D-CB-12P	1							
4D	CAROTHERS	308+90.00	6.1	21	651.80	#14	8X3	4.50	D-CB-14P				1				
4D	SE PARK	56+02.00	25.8	24	652.25	#12	4X3	4.64	D-CB-12P		1						
4D	SE PARK	57+50.00	26	25	650.36	#14	8X3	4.12	D-CB-14P				1				
4D	SE PARK	56+02.00	-29.7	27	652.25	#12	4X3	8.61	D-CB-12P			1					
4D	SE PARK	57+50.00	-42.9	28	650.60	#14	8X3	5.81	D-CB-14P				1				
4D	CAROTHERS	310+50.00	-58.5	29	650.52	#14	8X3	5.23	D-CB-14P				1				
4D	CAROTHERS	311+02.00	-55.5	33	650.63	#12	4X3	4.40	D-CB-12P		1						
4D	CAROTHERS	311+82.00	-55.5	33A	651.03	#12	4X3	4.22	D-CB-12P		1						
4D	CAROTHERS	311+00.00	-3.5	34	651.51	#12	4X3	4.84	D-CB-12P		1						
4D	CAROTHERS	310+50.00	-3.5	34A	651.17	#14	8X3	4.08	D-CB-14P				1				
4D	CAROTHERS	312+70.00	-52.5	38	651.60	#12	4' DIA.	4.93	D-CB-12RA		1						
5C	CAROTHERS	313+93.00	-43.5	42C	652.51	#12	4X3	4.89	D-CB-12P		1						
5C	CAROTHERS	314+65.00	-13.2	42D	653.28	#12	4X3	5.31	D-CB-12P		1						
5C	CAROTHERS	315+40.00	-5.1	42E	653.50	#12	4X3	4.61	D-CB-12P		1						
4D	SE PARK	55+10.00	20	51	653.59	#12	4X3	7.89	D-CB-12P		1						
4D	SE PARK	55+10.00	-21.2	52	653.55	#12	4X3	11.05	D-CB-12P			1					
6A	SE PARK	49+00.00	13.5	54	653.97	#12	4X3	7.47	D-CB-12P		1						
6A	SE PARK	49+00.00	-13.5	55	653.97	#12	4X3	11.97	D-CB-12P			1					
6A	SE PARK	50+39.00	-80.67	57	632.69	#42	4X4	4.90	D-CB-42SB							1	
6A	SE PARK	51+77.40	-40.31	58	636.05	#42	4x4	9.19	D-CB-42SB								1
TOTALS										**1**	**16**	**3**	**5**	**0**	**0**	**1**	**1**

MANHOLES AND JUNCTION BOXES

SHEET NO.	LOCATION	STATION	OFFSET (FT.)	DRAINAGE CODE	GRATE/TOP ELEV.	STRUCTURE TYPE	INSIDE DIMENSIONS	DEPTH (FT.)	STANDARD DRAWING	PAY ITEMS					
										TYPE 3 611-01-01 0' - 4'	TYPE 3 611-01-02 4' - 8'	TYPE 3 611-01-03 8' - 12'		JUNCTION BOX TYPE 2 611-02.11	JUNCTION BOX TYPE 3 611-02.12
4D	CAROTHERS	312+49.5	-43.23	39	651.23	MH#2	5' DIA	8.15	D-MH-2			1			
5C	CAROTHERS	313+70.8	-5.88	42A	653.32	MH#3	5' DIA	7.93	D-MH-2		1				
5C	CAROTHERS	313+95.3	-5.87	42B	653.46	MH#3	5' DIA	6.36	D-MH-2		1				
TOTALS										**0**	**2**	**1**		**0**	**0**

STORM DRAINAGE ENDWALLS

SHEET NO.	LOCATION	STATION	OFFSET (FT.)	DRAINAGE CODE	STRUCTURE TYPE	STANDARD DRAWING	CLASS A CONC. 611-07.01 (C.Y.)	REINF. STEEL 611-07.02 (LB.)	STRUC. STEEL 611-07.03 (LB.)
4D	SE PARK	53+24.11	-40.13	59	EW	D-PE-9	3.9	383	
4D	SE PARK	55+08.90	-53.35	53	EW	D-PE-4	1.0	45	
4D	CAROTHERS	312+44.30	-101.39	38B	EW	D-PE-9	5.1	481	
6C	SE PARK	49+00.60	-51.30	56	EW	D-PE-4	1.0	45	
TOTALS							**11**	**954**	**0**

VOID FOR BIDDING
FOR INFORMATION ONLY

SEALED BY

BRIAN A. RALSTIN
REGISTERED ENGINEER
XVI
AGRICULTURE
COMMERCE
No. 119683
STATE OF TENNESSEE
9/18/2020

HISTORIC FRANKLIN TENNESSEE

CITY OF FRANKLIN
ENGINEERING DEPARTMENT

TABULATED QUANTITIES

9/21/2020 8:39:45 AM
Y:\Washville\16019000S\16019033.00\Eng_Docs\Roadway\002D.sht

TYPE	YEAR	PROJECT NO.	SHEET NO.
CONST.	2020	COF# 2019-0098	2E

STORM DRAINAGE PIPES

SHEET NO.	FROM CODE	FROM OUTLET ELEV.	TO CODE	TO INLET ELEV.	% GRADE	REINFORCED CONC. PIPE - CLASS III 15"	18"	24"	30"	36"	42"
4D	3	648.82	9	648.20	0.66		93				
4D	9	647.97	11	647.75	1.04		21				
4D	12	648.82	11	648.20	1.00		62				
4D	14	646.88	15	646.14	1.67		44				
4D	15	645.94	16	645.84	1.67		6				
4D	17	646.92	18	646.82	1.10		9				
4D	20	647.74	21	647.50	0.55		44				
4D	21	647.30	22	647.25	0.59		8				
4D	24	647.61	27	647.11	1.01		50				
4D	28	644.79	27	643.64	0.80		144				
4D	25	646.24	28	645.60	1.01		63				
4D	29	645.29	28	644.99	0.81		37				
4D	33	646.23	29	645.99	0.51		47				
4D	33A	646.81	33	646.43	0.51		75				
4D	34A	647.09	34	646.87	0.49		45				
4D	34	646.67	33	646.43	0.52		46				
4D	38	646.67	39	646.50	1.00		17				
4D	39A	643.08	39B	642.98	0.67					15	
4D	24	647.61	27	647.11	1.01		50				
4D	27	643.44	52	642.73	0.81		88				
4D	51	645.70	52	645.20	1.35		37				
4D	52	642.50	53	638.50	12.50		32				
5D	42E	648.89	42D	648.17	1.00		72				
5D	42D	647.97	42B	647.30	1.01		66				
5D	42C	647.62	42B	647.30	1.00		32				
5D	42B	647.10	42A	646.89	1.03		20				
6A	54	646.50	55	646.00	1.85		27				
6A	55	642.00	56	636.50	15.71		35				
6A	57	627.79	58	627.06	0.50				146		
6A	58	626.86	59	626.12	0.50				149		
TOTALS						0	1272	0	295	15	0

PAVEMENT QUANTITIES

LOCATION	PAY ITEMS 303-01 (TON)	307-01.21 (TON)	307-02.01 (TON)	307-02.08 (TON)	402-01 (TON)	402-02 (TON)	403-02.01 (TON)	411-02.10 (S.Y.)	710-02 (L.F.)
CAROTHERS	4281.00	843.75	1233.75	757.50	7.50	27.00	6.75	726.00	1435.50
SOUTHEST PARK ENTRANCE	1427.00	281.25	411.25	252.50	2.50	9.00	2.25	242.00	478.50
TOTALS	5708.00	1125.00	1645.00	1010.00	10.00	36.00	9.00	968.00	1914.00

CURB RAMPS TABULATION

ROADWAY MAINLINE	ROADWAY INTERSECTING	LOCATION STATION or LOG MILE (L.M.)	Left	Median	Right	QUADRANT N.	S.	E.	W.	STANDARD DRAWING NO.	CONCRETE (RETROFIT) ITEM NO. 712-02.01 S.F.	CONCRETE (NEW) ITEM NO. 701-02.03 S.F.	REMARKS
CAROTHERS	CAROTHERS	309+15	X				X			MM-CR-9		381.9	
CAROTHERS	CAROTHERS	310+40	X						X	MM-CR-5		170.8	
										TOTAL	0	553	

ESTIMATED GRADING QUANTITIES

STATION TO STATION	ROAD & DRAINAGE EXC. (UNCL.) COMMON - C.Y.	S. ROCK - C.Y.	UNDERCUT C.Y.	BORROW EXCAVATION UNCL. - C.Y.	SELECT MATERIAL - C.Y.	GRADED S. ROCK - C.Y.	GEOTEXTILE TYPE IV S.Y.	EMB. C.Y.
CAROTHERS PARKWAY	3000			2825				
PARK ACCESS ROAD				22175				
TOTALS	3000	0	0	25000	0	0	0	0

PROPOSED GUARDRAIL

SHEET NO.	LOCATION	SIDE LT	SIDE RT	STATION FROM	STATION TO	GUARDRAIL		TERMINAL ANCHORS THRIE BM BRIDGE TRANS MASH TL-2 705-06.26 (EACH)	TYPE 21 705-06.30 (EACH)		REMARKS
4A	SE PARK		X	55+03.00	55+45.23			1	1		POWDER COATED BLACK
4A	SE PARK	X		55+03.00	55+45.16			1	1		POWDER COATED BLACK
TOTALS						0	0	2	2	0	

VOID FOR BIDDING
FOR INFORMATION ONLY

SEALED BY

BRIAN A. RALSTIN REGISTERED ENGINEER AGRICULTURE COMMERCE NO. 119683 STATE OF TENNESSEE 9/18/2020

HISTORIC FRANKLIN TENNESSEE

CITY OF FRANKLIN
ENGINEERING DEPARTMENT

TABULATED QUANTITIES

9/21/2020 8:39:53 AM
Y:\Nashville\16019000S\16019033.00\Eng_Docs\Roadway\002E.sht

TYPE	YEAR	PROJECT NO.	SHEET NO.
CONST.	2020	COF# 2019-0098	3

UTILITY

(1) THE LOCATIONS OF UTILITIES SHOWN WITHIN THESE PLANS ARE APPROXIMATE ONLY. THE SURVEYOR HAS NOT PHYSICALLY LOCATED THE UNDERGROUND UTILITIES. ABOVE GRADE AND UNDERGROUND UTILITIES SHOWN WERE TAKEN FROM VISIBLE APPURTENANCES AT THE SITE, PUBLIC RECORDS, AND/OR MAPS PREPARED BY OTHERS. THEREFORE, RELIANCE UPON THE TYPE, SIZE, AND LOCATION OF UTILITIES SHOWN SHOULD BE DONE SO WITH THIS CIRCUMSTANCE CONSIDERED. DETAILED VERIFICATION OF EXISTENCE, LOCATION, AND DEPTH SHOULD ALSO BE MADE PRIOR TO ANY DECISION RELATIVE THERETO IS MADE. AVAILABILITY AND COST OF SERVICE SHOULD BE CONFIRMED WITH THE APPROPRIATE UTILITY COMPANY. IN TENNESSEE, IT IS A REQUIREMENT, PER "THE UNDERGROUND UTILITY DAMAGE PREVENTION ACT", THAT ANYONE WHO ENGAGES IN EXCAVATION MUST NOTIFY ALL KNOWN UNDERGROUND UTILITY OWNERS, NO LESS THAN THREE (3) OR NOT MORE THAN TEN (10) WORKING DAYS PRIOR TO THE DATE OF THEIR INTENT TO EXCAVATE AND ALSO TO AVOID ANY POSSIBLE HAZARD OR CONFLICT. NOTIFICATION BY CALLING THE TENNESSEE ONE CALL SYSTEM, INC., AT 1-800-351-1111 AS REQUIRED BY TCA 65-31-106 WILL BE REQUIRED.

(2) UNLESS OTHERWISE NOTED, ALL UTILITY ADJUSTMENTS APART FROM THOSE IDENTIFIED IN THESE PLANS WILL BE PERFORMED BY THE UTILITY OR ITS REPRESENTATIVE. THE CONTRACTOR AND UTILITY OWNERS WILL BE REQUIRED TO COOPERATE WITH EACH OTHER IN ORDER TO EXPEDITE THE WORK REQUIRED BY THIS CONTRACT. ON CONTRACTS WHERE CONSTRUCTION STAKES, LINES, AND GRADES ARE CONTRACT ITEMS, THE CONTRACTOR WILL BE REQUIRED TO PROVIDE RIGHT-OF-WAY OR SLOPE STAKES, DITCH OR STREAM BED GRADES, OR OTHER ESSENTIAL SURVEY STAKING TO PREVENT CONFLICTS WITH THE HIGHWAY CONSTRUCTION. FREQUENTLY, THIS WILL BE REQUIRED AS THE FIRST ITEM OF WORK AND AT ANY LOCATION ON THE PROJECT DIRECTED BY THE ENGINEER.

(3) THE CONTRACTOR WILL PROVIDE ALL NECESSARY PROTECTIVE MEASURES TO SAFEGUARD EXISTING UTILITIES FROM DAMAGE DURING CONSTRUCTION OF THIS PROJECT. IN THE EVENT THAT SPECIAL EQUIPMENT IS REQUIRED TO WORK OVER AND AROUND THE UTILITIES, THE CONTRACTOR WILL BE REQUIRED TO FURNISH SUCH EQUIPMENT. THE COST OF PROTECTING UTILITIES FROM DAMAGE AND FURNISHING SPECIAL EQUIPMENT WILL BE INCLUDED IN THE PRICE BID FOR OTHER ITEMS OF CONSTRUCTION.

(4) PRIOR TO SUBMITTING HIS BID, THE CONTRACTOR WILL BE SOLELY RESPONSIBLE FOR CONTACTING OWNERS OF ALL AFFECTED UTILITIES IN ORDER TO DETERMINE THE EXTENT TO WHICH UTILITY RELOCATIONS AND/OR ADJUSTMENTS WILL HAVE UPON THE SCHEDULE OF WORK FOR THE PROJECT. WHILE SOME WORK MAY BE REQUIRED 'AROUND' UTILITY FACILITIES THAT WILL REMAIN IN PLACE, OTHER UTILITY FACILITIES MAY NEED TO BE ADJUSTED CONCURRENTLY WITH THE CONTRACTOR'S OPERATIONS. ADVANCE CLEAR CUTTING MAY BE REQUIRED BY THE ENGINEER AT ANY LOCATION WHERE CLEARING IS CALLED FOR IN THE SPECIFICATIONS AND CLEAR CUTTING IS NECESSARY FOR A UTILITY RELOCATION. ANY ADDITIONAL COST WILL BE INCLUDED IN THE UNIT PRICE BID FOR THE CLEARING ITEM SPECIFIED IN THE PLANS.

(5) THE CONTRACTOR SHALL NOTIFY EACH INDIVIDUAL UTILITY OWNER OF HIS PLAN OF OPERATION IN THE AREA OF THE UTILITIES. PRIOR TO COMMENCING WORK, THE CONTRACTOR SHALL CONTACT THE UTILITY OWNERS AND REQUEST THEM TO PROPERLY LOCATE THEIR RESPECTIVE UTILITY ON THE GROUND. THIS NOTIFICATION SHALL BE GIVEN AT LEAST THREE (3) BUSINESS DAYS PRIOR TO COMMENCEMENT OF OPERATIONS AROUND THE UTILITY IN ACCORDANCE WITH TCA 65-31-106 NOTIFICATION BY CALLING THE TENNESSEE ONE CALL SYSTEM, INC AT 1-800-351-1111 WILL BE REQUIRED.

UTILITY OWNERS

MIDDLE TN ELECTRIC MEMBERSHIP CORP.
2156 EDWARD CURD LANE
FRANKLIN, TN 37064
ATTN: DERRICK LYNCH
PH (615) 595-4669
EMAIL: DERRICK.LYNCH@MTEMC.COM

ATMOS ENERGY - GAS
810 CRESCENT CENTRE DRIVE
SUITE 600
FRANKLIN, TN 37067
ATTN: ABBY DAVIS
PH (615) 771-8369
EMAIL: ABBY.DAVIS@ATMOSENERGY.COM

COMCAST CABLE COMMUNICATIONS
660 MAINSTREAM DRIVE
NASHVILLE, TN 37228
ATTN: RUSTY HOLLOWAY
PH (615) 244-7462 EXT. 1115471
EMAIL: RUSSELL_HOLLOWAY@CABLE.COMCAST.COM

LEVEL 3 COMMUNICATIONS, INC
105A WILHOIT STREET
CRAWFORDSVILLE, IN 47933
ATTN: TIM HILL
PH (704) 733-3204
EMAIL: TIM.W.HILL@CENTURYLINK.COM

CITY OF FRANKLIN - WATER MANAGEMENT DEPARTMENT
124 LUMBER DRIVE
FRANKLIN, TN 37064
ATTN: MICHELLE HATCHER
PH (615) 794-4554
EMAIL: MICHELLE.HATCHER@FRANKLINTN.GOV

AT&T - OUTSIDE PLAN ENGINEERING
333 COMMERCE STREET
NASHVILLE, TN 37201
ATTN: LEE KORNEGAY
PH (615) 214-7318
EMAIL: KK4096@ATT.COM

CITY OF FRANKLIN FIBER OPTICS
109 3RD AVE SOUTH
FRANKLIN, TN 37064
ATTN: MIKE PROCTOR
PH (615) 289-1036
EMAIL: MIKEP@FRANKLINTN.GOV

MILCROFTON UTILITY DISTRICT
6333 ARNO ROAD
FRANKLIN, TN 37064
ATTN: MIKE JONES
EMAIL MIKE@MILCROFTON.COM

VOID FOR BIDDING
FOR INFORMATION ONLY

SEALED BY

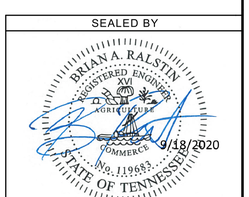

9/18/2020

HISTORIC FRANKLIN TENNESSEE

CITY OF FRANKLIN
ENGINEERING DEPARTMENT

UTILITY NOTES
AND
UTILITY OWNERS

9/21/2020 8:40:01 AM
Y:\Nashville\16019000S\16019033.00\Eng_Docs\Roadway\003.sht

TYPE	YEAR	PROJECT NO.	SHEET NO.
CONST.	2020	COF# 2019-0098	4

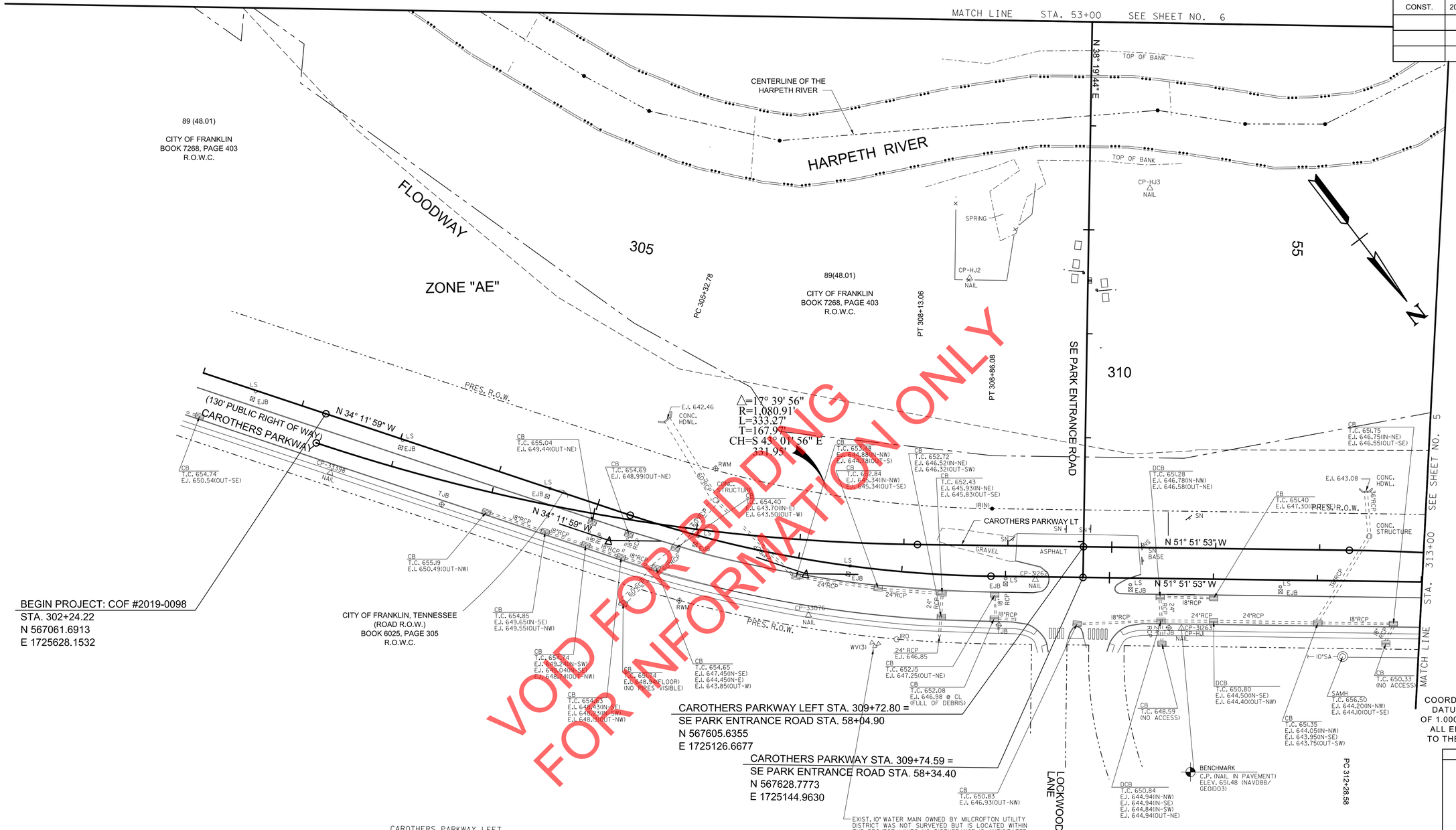

BEGIN PROJECT: COF #2019-0098
STA. 302+24.22
N 567061.6913
E 1725628.1532

CITY OF FRANKLIN, TENNESSEE
(ROAD R.O.W.)
BOOK 6025, PAGE 305
R.O.W.C.

CAROTHERS PARKWAY LEFT STA. 309+72.80 =
SE PARK ENTRANCE ROAD STA. 58+04.90
N 567605.6355
E 1725126.6677

CAROTHERS PARKWAY STA. 309+74.59 =
SE PARK ENTRANCE ROAD STA. 58+34.40
N 567628.7773
E 1725144.9630

EXIST. 10" WATER MAIN OWNED BY MILCROFTON UTILITY DISTRICT WAS NOT SURVEYED BUT IS LOCATED WITHIN THE PROJECT LIMITS; NO DISTURBANCE IS ANTICIPATED, BUT THE CONTRACTOR SHALL VERIFY LOCATION PRIOR TO BEGINNING WORK.

CAROTHERS PARKWAY LEFT
CURVE SBC5
PI 305+20.99
N 567,323.7287
E 1,725,485.7423
Δ 17° 39' 54" (LT)
D 3° 00' 00"
R 1,909.86
L 588.84
T 296.77

CAROTHERS PARKWAY
CURVE SBC2
PI 307+10.84
N 567,464.1650
E 1,725,354.6355
Δ 17° 39' 54" (LT)
D 5° 00' 00"
R 1,145.92
L 353.30
T 178.06
SE 0.020 FT/FT
DESIGN SPEED 40 MPH
TRANS. LENGTH 150

COORDINATES ARE NAD 83(1983), ARE DATUM ADJUSTED BY THE FACTOR OF 1.000082257 AND TIED TO THE TGRN. ALL ELEVATIONS ARE REFERENCED TO THE NAVD 1988 WITH GEOID 2003.

SEALED BY

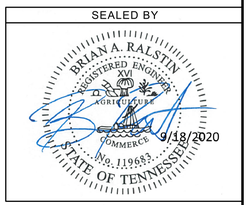

9/18/2020

HISTORIC FRANKLIN TENNESSEE

CITY OF FRANKLIN
ENGINEERING DEPARTMENT

PRESENT LAYOUT

STA._53+00 TO STA._58+34.40
STA. 302+00 TO STA. 313+00
SCALE: 1"= 50'

9/21/2020 8:40:11 AM
Y:\Nashville\16019000S\16019033.00\Eng_Docs\Roadway\004.sht

TYPE	YEAR	PROJECT NO.	SHEET NO.
CONST.	2020	COF# 2019-0098	4A

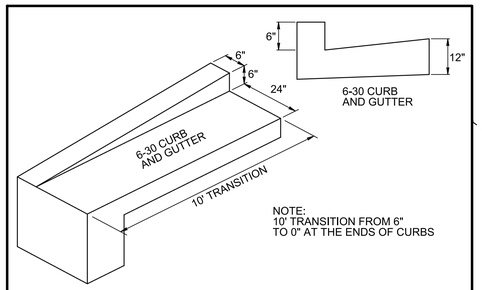

NOTE:
10' TRANSITION FROM 6" TO 0" AT THE ENDS OF CURBS

COST TO BE INCLUDED IN UNIT PRICE BID FOR CURB AND GUTTER (TO BE PAID FOR UNDER ITEM NO. 702-03)

DETAIL FOR CURB TRANSITION

NOT TO SCALE

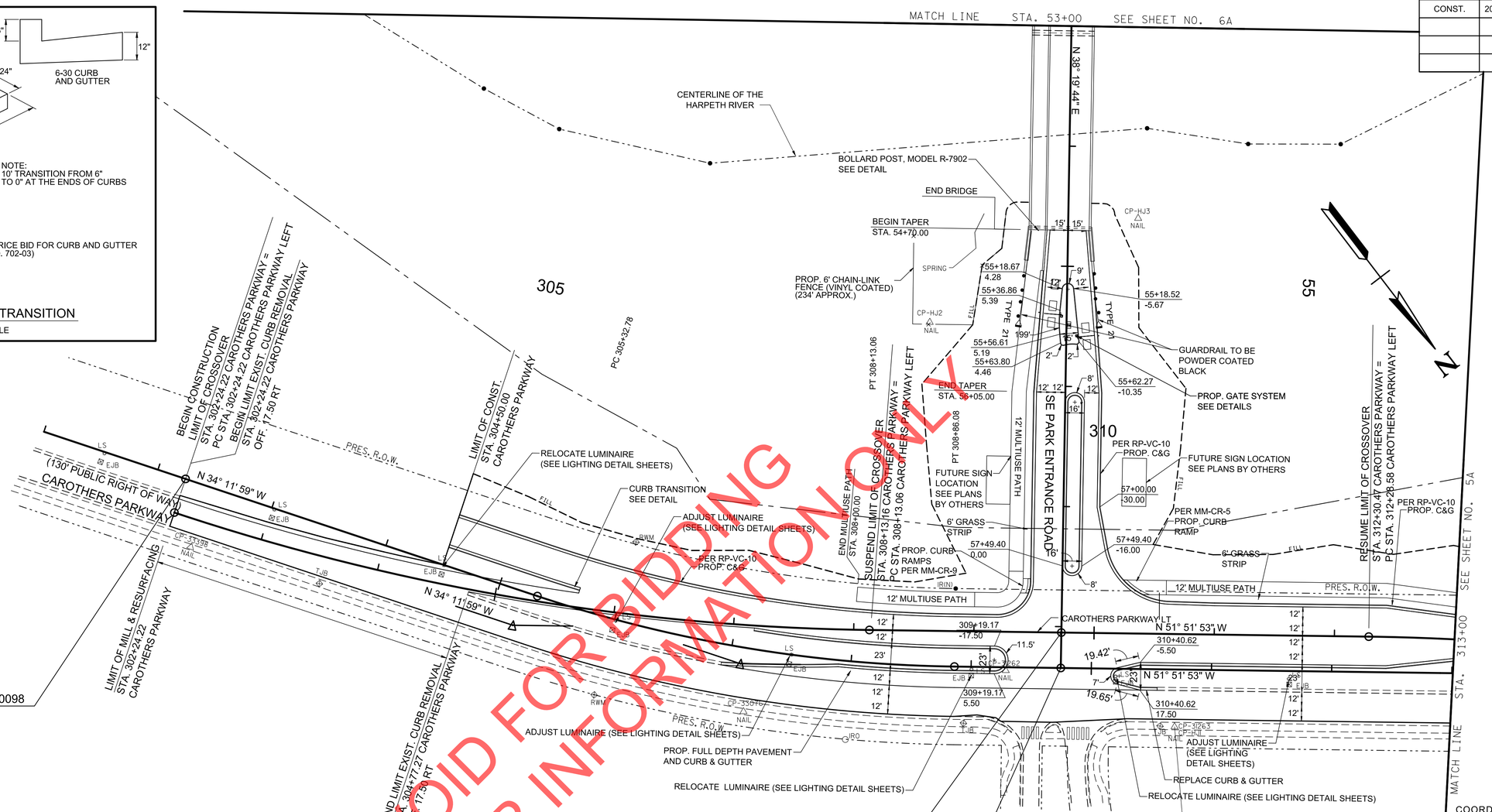

BEGIN PROJECT: COF #2019-0098
STA. 302+24.22
N 567061.6913
E 1725628.1532

CAROTHERS PARKWAY LEFT STA. 309+72.80 =
SE PARK ENTRANCE ROAD STA. 58+04.90
N 567605.6355
E 1725126.6677

CAROTHERS PARKWAY STA. 309+74.59 =
SE PARK ENTRANCE ROAD STA. 58+34.40
N 567628.7773
E 1725144.9630

COORDINATES ARE NAD 83(1983), ARE DATUM ADJUSTED BY THE FACTOR OF 1.000082257 AND TIED TO THE TGRN. ALL ELEVATIONS ARE REFERENCED TO THE NAVD 1988 WITH GEOID 2003.

VOID FOR BIDDING
FOR INFORMATION ONLY

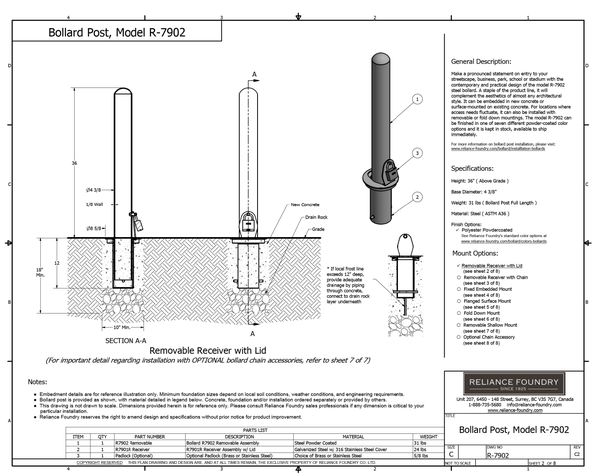

CAROTHERS PARKWAY LEFT
CURVE SBC5
PI 305+20.99
N 567,323.7287
E 1,725,485.7423
Δ 17° 39′ 54″ (LT)
D 3° 00′ 00″
R 1,909.86
L 588.84
T 296.77

CAROTHERS PARKWAY
CURVE SBC2
PI 307+10.84
N 567,464.1650
E 1,725,354.6355
Δ 17° 39′ 54″ (LT)
D 5° 00′ 00″
R 1,145.92
L 353.30
T 178.06
SE 0.020 FT/FT
DESIGN SPEED 40 MPH
TRANS. LENGTH 150

NOTE :
ALL DETECTABLE WARNING MAT AND TRUNCATED DOMES SHALL BE RED IN COLOR. ALL GUARDRAIL SHALL BE POWDER COATED BLACK.

NOTE:
SEE PAVEMENT MARKING AND SIGNING PLANS FOR DETAILS (SHEET NO. 9 THRU 9B)

HISTORIC FRANKLIN TENNESSEE

SEALED BY

BRIAN A. RALSTIN REGISTERED ENGINEER AGRICULTURE COMMERCE No. 119683 STATE OF TENNESSEE
9/18/2020

CITY OF FRANKLIN ENGINEERING DEPARTMENT

PROPOSED LAYOUT

STA. 302+00 TO STA. 313+00

SCALE: 1"= 50'

9/21/2020 8:40:14 AM
Y:\Nashville\16019000S\16019033.00\Eng_Docs\Roadway\004A.sht

TYPE	YEAR	PROJECT NO.	SHEET NO.
CONST.	2020	COF# 2019-0098	4B

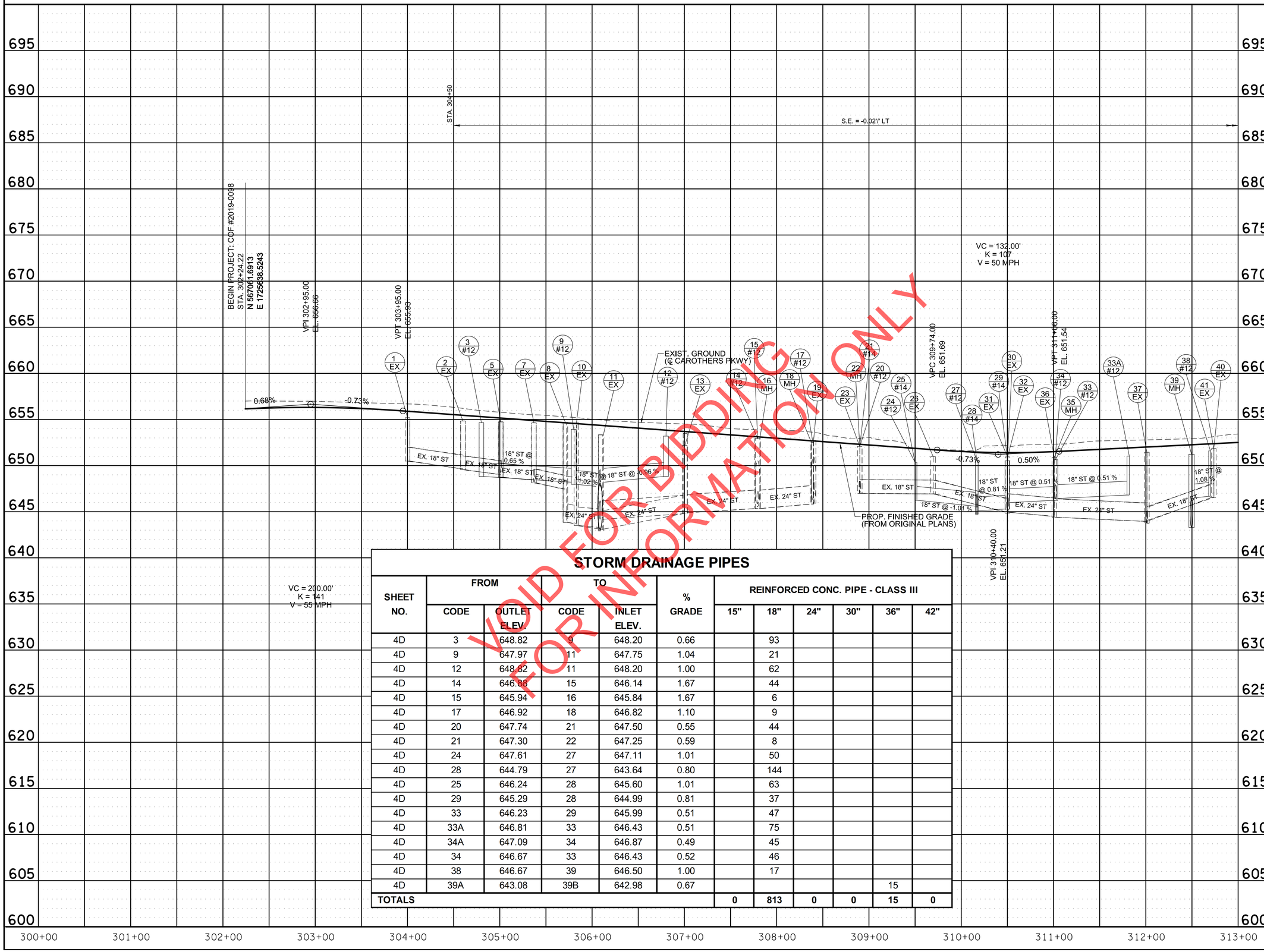

STORM DRAINAGE PIPES

SHEET NO.	FROM CODE	FROM OUTLET ELEV.	TO CODE	TO INLET ELEV.	% GRADE	REINFORCED CONC. PIPE - CLASS III 15"	18"	24"	30"	36"	42"
4D	3	648.82	9	648.20	0.66		93				
4D	9	647.97	11	647.75	1.04		21				
4D	12	648.82	11	648.20	1.00		62				
4D	14	646.85	15	646.14	1.67		44				
4D	15	645.94	16	645.84	1.67		6				
4D	17	646.92	18	646.82	1.10		9				
4D	20	647.74	21	647.50	0.55		44				
4D	21	647.30	22	647.25	0.59		8				
4D	24	647.61	27	647.11	1.01		50				
4D	28	644.79	27	643.64	0.80		144				
4D	25	646.24	28	645.60	1.01		63				
4D	29	645.29	28	644.99	0.81		37				
4D	33	646.23	29	645.99	0.51		47				
4D	33A	646.81	33	646.43	0.51		75				
4D	34A	647.09	34	646.87	0.49		45				
4D	34	646.67	33	646.43	0.52		46				
4D	38	646.67	39	646.50	1.00		17				
4D	39A	643.08	39B	642.98	0.67					15	
TOTALS						0	813	0	0	15	0

VOID FOR BIDDING
FOR INFORMATION ONLY

SEALED BY

BRIAN A. RALSTIN
REGISTERED ENGINEER
No. 119683
STATE OF TENNESSEE
9/18/2020

HISTORIC
FRANKLIN
TENNESSEE

CITY OF FRANKLIN
ENGINEERING DEPARTMENT

PROPOSED PROFILE

CAROTHERS PKWY
STA. 302+24.24 TO STA. 313+00

SCALE: 1"= 50' HORIZ.
1"= 5' VERT.

9/21/2020 8:40:19 AM
Y:\Nashville\16019000S\16019033.00\Eng_Docs\Roadway\004B.sht

TYPE	YEAR	PROJECT NO.	SHEET NO.
CONST.	2020	COF# 2019-0098	4C

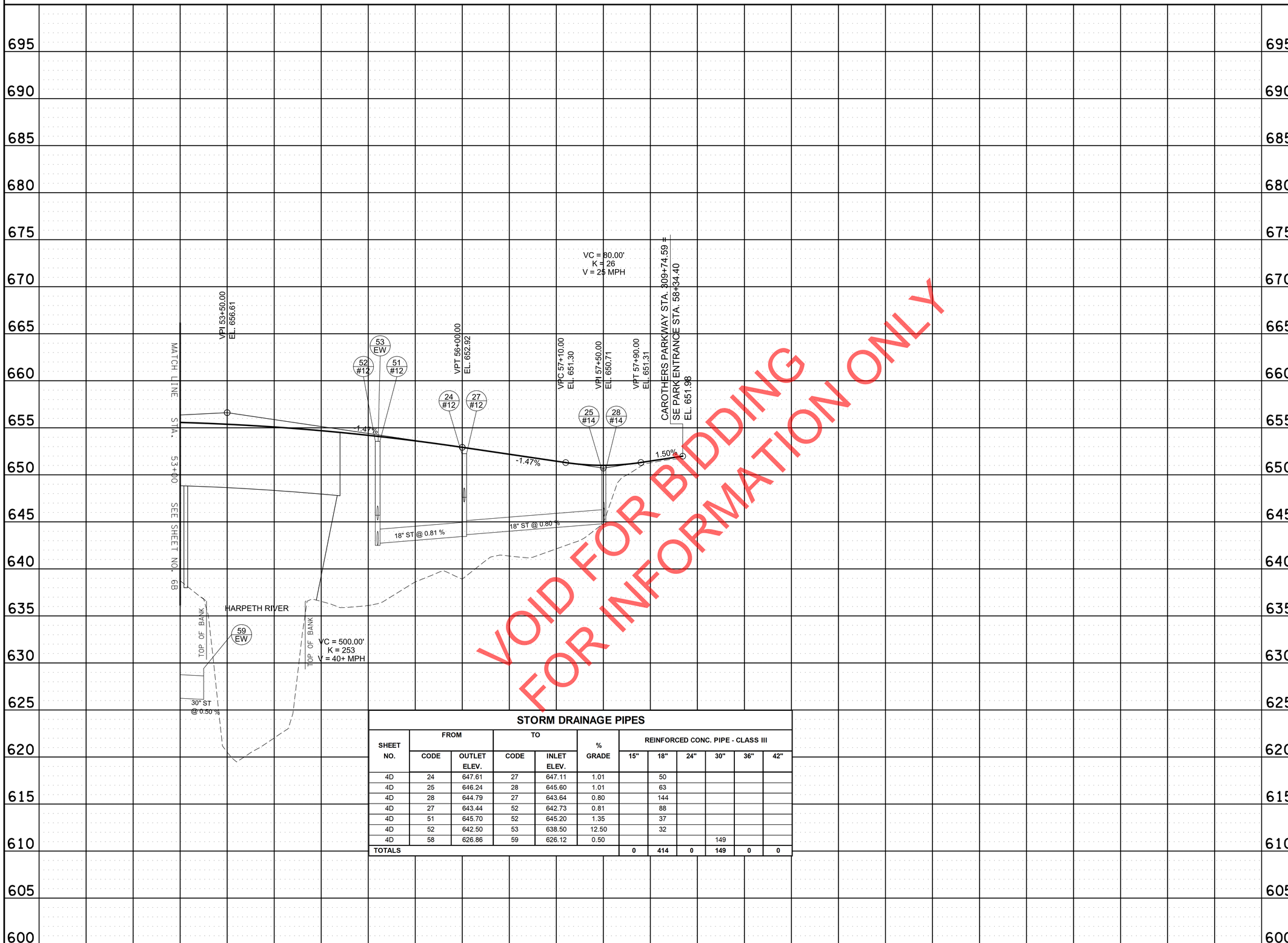

VOID FOR BIDDING
FOR INFORMATION ONLY

STORM DRAINAGE PIPES

SHEET NO.	FROM CODE	FROM OUTLET ELEV.	TO CODE	TO INLET ELEV.	% GRADE	REINFORCED CONC. PIPE - CLASS III 15"	18"	24"	30"	36"	42"
4D	24	647.61	27	647.11	1.01		50				
4D	25	646.24	28	645.60	1.01		63				
4D	28	644.79	27	643.64	0.80		144				
4D	27	643.44	52	642.73	0.81		88				
4D	51	645.70	52	645.20	1.35		37				
4D	52	642.50	53	638.50	12.50		32				
4D	58	626.86	59	626.12	0.50				149		
TOTALS						0	414	0	149	0	0

SEALED BY

BRIAN A. RALSTIN
REGISTERED ENGINEER
No. 119683
STATE OF TENNESSEE
9/18/2020

HISTORIC
FRANKLIN
TENNESSEE

CITY OF FRANKLIN
ENGINEERING DEPARTMENT

PROPOSED PROFILE

SE PARK ENTRANCE

SCALE: 1"= 50' HORIZ.
1"= 5' VERT.

9/21/2020 8:40:23 AM
Y:\Nashville\16019000S\16019033.00\Eng_Docs\Roadway\004C.sht

TYPE	YEAR	PROJECT NO.	SHEET NO.
CONST.	2020	COF# 2019-0098	4D

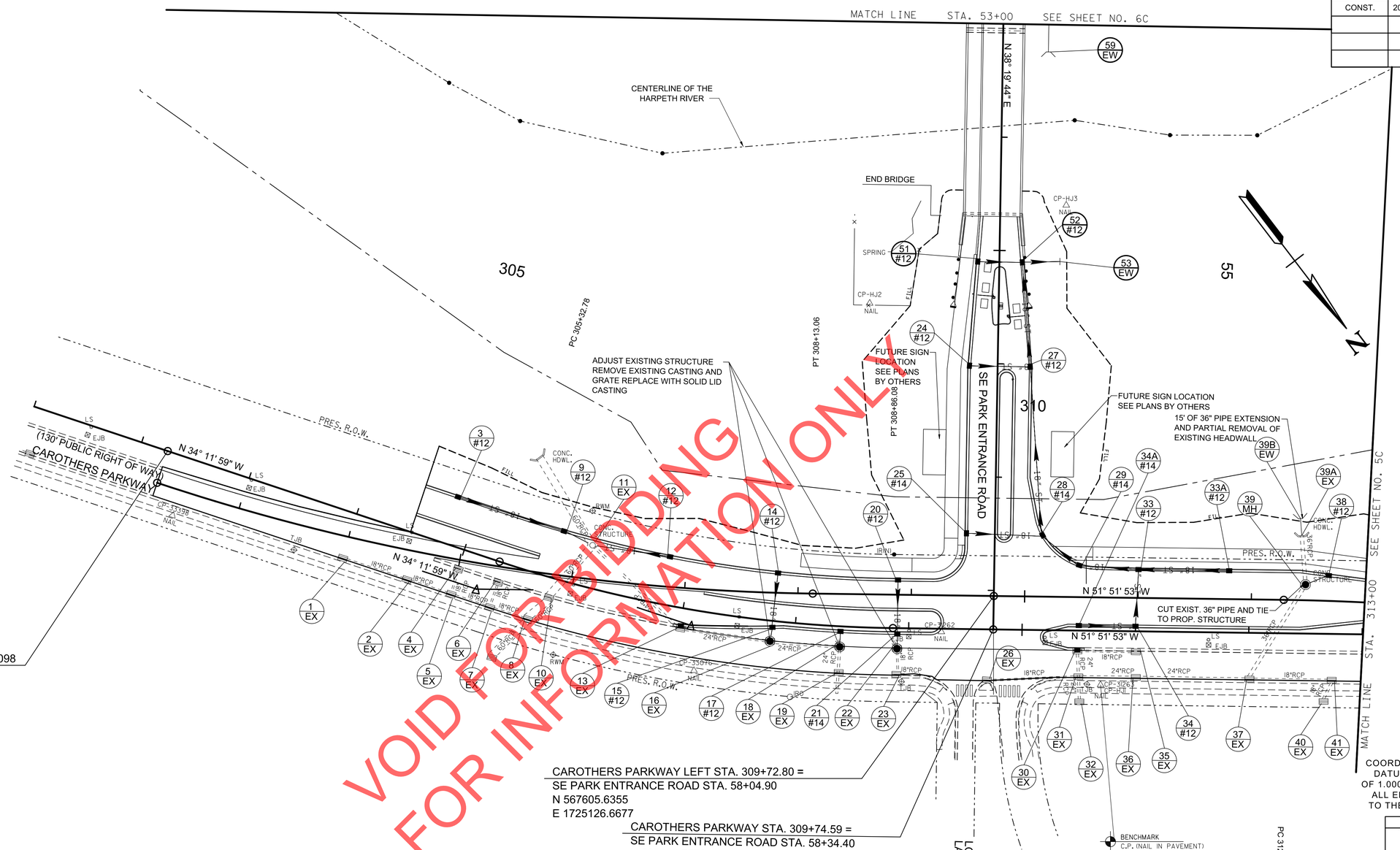

VOID FOR BIDDING
FOR INFORMATION ONLY

BEGIN PROJECT: COF #2019-0098
STA. 302+24.22
N 567061.6913
E 1725628.1532

CAROTHERS PARKWAY LEFT STA. 309+72.80 =
SE PARK ENTRANCE ROAD STA. 58+04.90
N 567605.6355
E 1725126.6677

CAROTHERS PARKWAY STA. 309+74.59 =
SE PARK ENTRANCE ROAD STA. 58+34.40
N 567628.7773
E 1725144.9630

COORDINATES ARE NAD 83(1983), ARE DATUM ADJUSTED BY THE FACTOR OF 1.000082257 AND TIED TO THE TGRN. ALL ELEVATIONS ARE REFERENCED TO THE NAVD 1988 WITH GEOID 2003.

3/#12 GT. EL. 654.66 OUT.EL. 648.82
9/#12 GT. EL. 653.93 IN. EL. 648.20 OUT.EL. 647.97
11/MH GT. EL. 653.34 IN. EL. 648.20 W IN. EL. 647.75 E OUT.EL. EX.
12/#12 GT. EL. 653.19 OUT.EL. 648.82
14/#12 GT. EL. 652.46 OUT.EL. 646.88
15/#12 GT. EL. 652.70 IN. EL. 646.14 OUT.EL. 645.94
16/EX GT. EL. 652.94 IN. EL. 645.84 OUT.EL. EX.
17/#12 GT. EL. 652.26 OUT.EL. 646.92
18/EX GT. EL. 652.52 IN. EL. 646.82 OUT.EL. EX.
20/#12 GT. EL. 651.66 OUT.EL. 647.74
21/#14 GT. EL. 651.80 IN. EL. 647.50 OUT.EL. 647.30
22/EX GT. EL. 652.07 IN. EL. 647.25 OUT.EL. EX.
24/#12 GT. EL. 652.25 OUT.EL. 647.61
25/#14 GT. EL. 650.36 OUT.EL. 646.24
27/#12 GT. EL. 652.25 IN. EL. 647.11 E IN. EL. 643.64 N OUT.EL. 643.44
28/#14 GT. EL. 650.60 IN. EL. 645.60 E IN. EL. 644.99 N OUT.EL. 644.79
29/#14 GT. EL. 650.52 IN. EL. 645.99 OUT.EL. 645.29
33/#12 GT. EL. 650.63 IN. EL. 646.43 IN. EL. 646.43 OUT.EL. 646.23
33A/#12 GT. EL. 651.03 OUT.EL. 646.81
34/#12 GT. EL. 651.51 IN. EL. 646.87 OUT.EL. 646.67
34A/#14 GT. EL. 651.17 OUT.EL. 647.09
38/#12 GT. EL. 651.60 OUT.EL. 646.67
39/MH GT. EL. 651.23 IN. EL. 646.50 OUT.EL. EX.
51/#12 GT. EL. 653.59 OUT.EL. 645.70
52/#12 GT. EL. 653.55 IN. EL. 645.20 E IN. EL. 642.73 N OUT.EL. 642.50
39A/EX OUT. EL. 643.08
39B/EW IN. EL. 642.98
53/EW IN. EL. 638.50
59/EW IN. EL. 626.12

CAROTHERS PARKWAY LEFT
CURVE SBC5
PI 305+20.99
N 567,323.7287
E 1,725,485.7423
Δ 17° 39′ 54″ (LT)
D 3° 00′ 00″
R 1,909.86
L 588.84
T 296.77

CAROTHERS PARKWAY
CURVE SBC2
PI 307+10.84
N 567,464.1650
E 1,725,354.6355
Δ 17° 39′ 54″ (LT)
D 5° 00′ 00″
R 1,145.92
L 353.30
T 178.06
SE 0.020 FT/FT
DESIGN SPEED 40 MPH
TRANS. LENGTH 150

SEALED BY
BRIAN A. RALSTIN REGISTERED ENGINEER AGRICULTURE COMMERCE No. 119683 STATE OF TENNESSEE
9/18/2020

HISTORIC FRANKLIN TENNESSEE

CITY OF FRANKLIN
ENGINEERING DEPARTMENT

DRAINAGE LAYOUT

STA. 302+00 TO STA. 313+00

SCALE: 1"= 50'

9/21/2020 8:40:26 AM
Y:\Nashville\16019000S\16019033.00\Eng_Docs\Roadway\004D.sht

TYPE	YEAR	PROJECT NO.	SHEET NO.
CONST.	2020	COF# 2019-0098	5

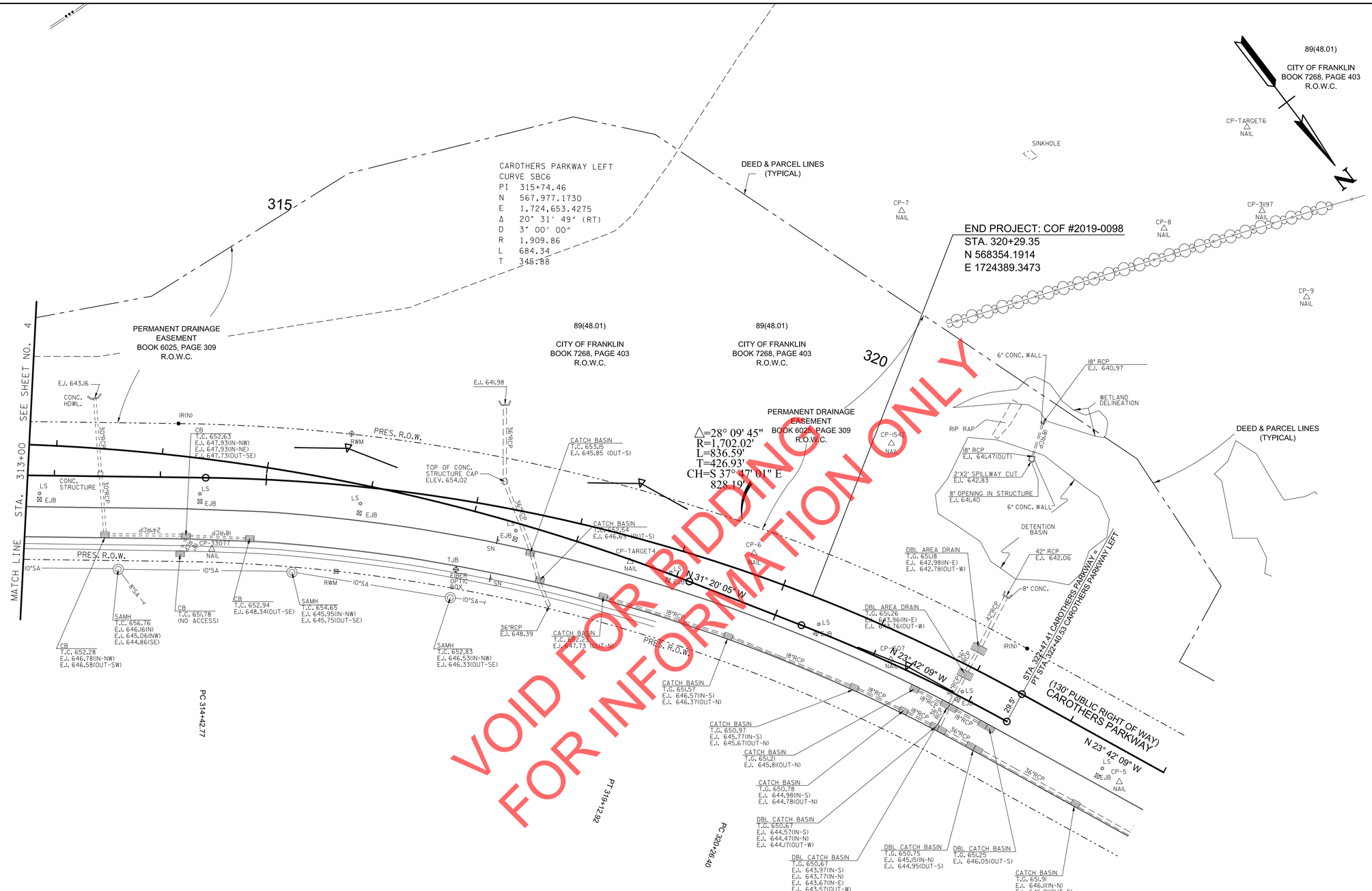

CAROTHERS PARKWAY
CURVE SBC3
PI 318+53.39
N 568,171.4550
E 1,724,453.7355
Δ 28° 09′ 44″ (RT)
D 3° 30′ 00″
R 1,637.02
L 804.63
T 410.62
SE 0.020 FT/FT
DESIGN SPEED 40 MPH
TRANS. LENGTH 150

CAROTHERS PARKWAY LEFT
CURVE SBC7
PI 321+33.62
N 568,461.1156
E 1,724,358.7853
Δ 7° 37′ 55″ (RT)
D 3° 33′ 51″
R 1,607.52
L 214.13
T 107.22

COORDINATES ARE NAD 83(1983), ARE DATUM ADJUSTED BY THE FACTOR OF 1.000082257 AND TIED TO THE TGRN. ALL ELEVATIONS ARE REFERENCED TO THE NAVD 1988 WITH GEOID 2003.

SEALED BY

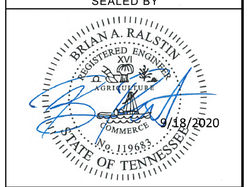

HISTORIC
FRANKLIN
TENNESSEE

CITY OF FRANKLIN
ENGINEERING DEPARTMENT

PRESENT LAYOUT

STA. 313+00 TO STA. 323+00

SCALE: 1"= 50'

9/21/2020 8:40:28 AM
Y:\Nashville\16019000S\16019033.00\Eng_Docs\Roadway\005.sht

TYPE	YEAR	PROJECT NO.	SHEET NO.
CONST.	2020	COF# 2019-0098	5A

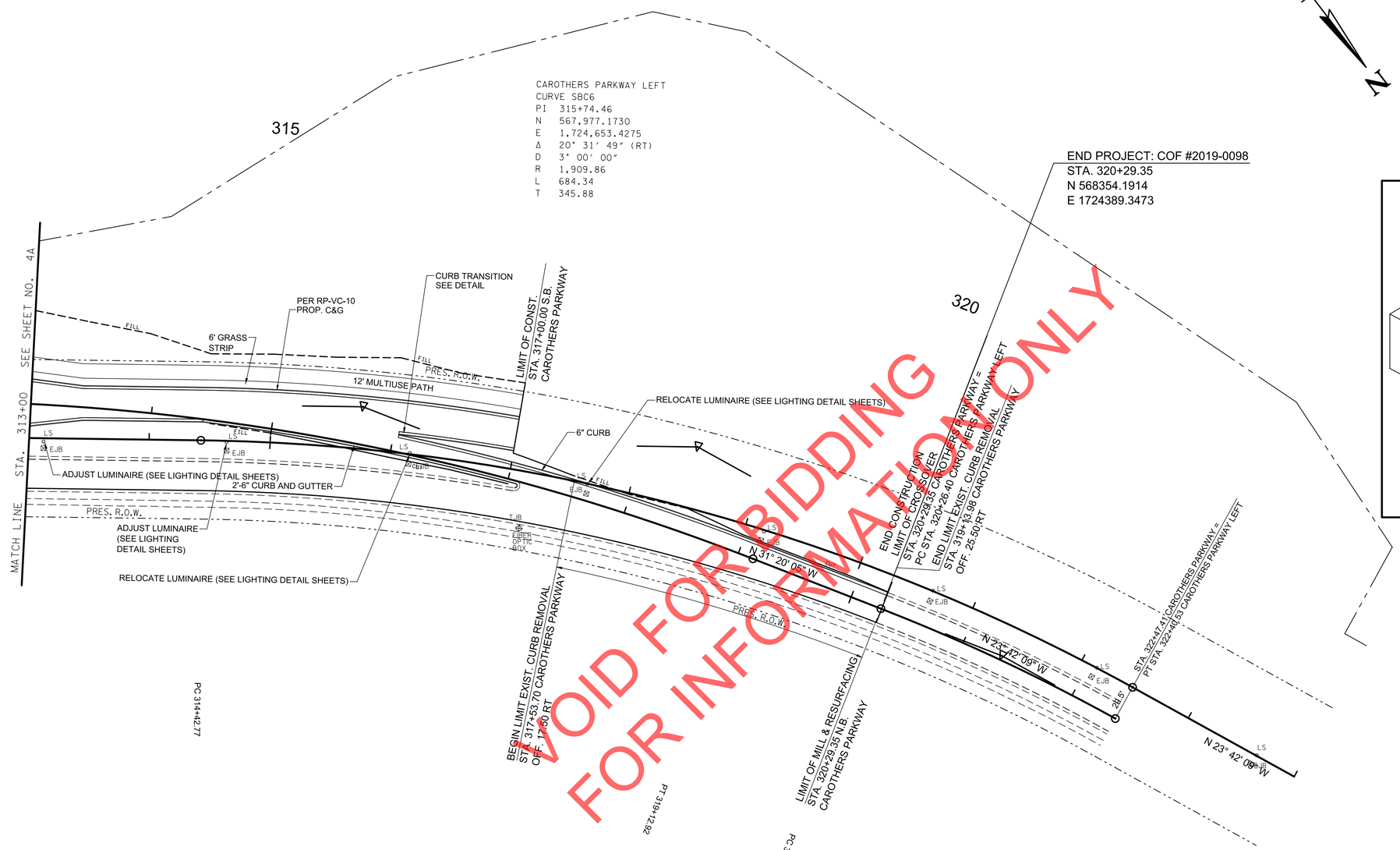

VOID FOR BIDDING
FOR INFORMATION ONLY

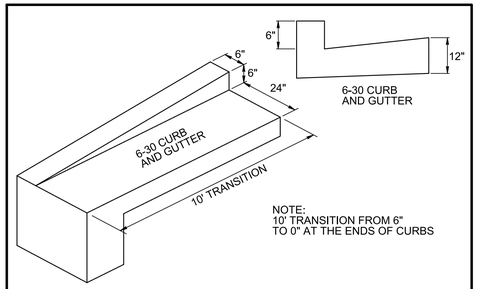

NOTE:
10' TRANSITION FROM 6"
TO 0" AT THE ENDS OF CURBS

COST TO BE INCLUDED IN UNIT PRICE BID FOR CURB AND GUTTER
(TO BE PAID FOR UNDER ITEM NO. 702-03)

DETAIL FOR CURB TRANSITION

NOT TO SCALE

CAROTHERS PARKWAY
CURVE SBC3
PI 318+53.39
N 568,171.4550
E 1,724,453.7355
Δ 28° 09′ 44″ (RT)
D 3° 30′ 00″
R 1,637.02
L 804.63
T 410.62
SE 0.020 FT/FT
DESIGN SPEED 40 MPH
TRANS. LENGTH 150

CAROTHERS PARKWAY LEFT
CURVE SBC7
PI 321+33.62
N 568,461.1156
E 1,724,358.7853
Δ 7° 37′ 55″ (RT)
D 3° 33′ 51″
R 1,607.52
L 214.13
T 107.22

COORDINATES ARE NAD 83(1983), ARE
DATUM ADJUSTED BY THE FACTOR
OF 1.000082257 AND TIED TO THE TGRN.
ALL ELEVATIONS ARE REFERENCED
TO THE NAVD 1988 WITH GEOID 2003.

SEALED BY

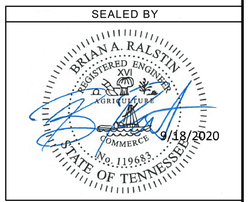

9/18/2020

HISTORIC
FRANKLIN
TENNESSEE

CITY OF FRANKLIN
ENGINEERING DEPARTMENT

PROPOSED LAYOUT

STA. 313+00 TO STA. 323+00

SCALE: 1"= 50'

9/21/2020 8:40:30 AM
Y:\Nashville\16019000S\16019033.00\Eng_Docs\Roadway\005A.sht

TYPE	YEAR	PROJECT NO.	SHEET NO.
CONST.	2020	COF# 2019-0098	5B

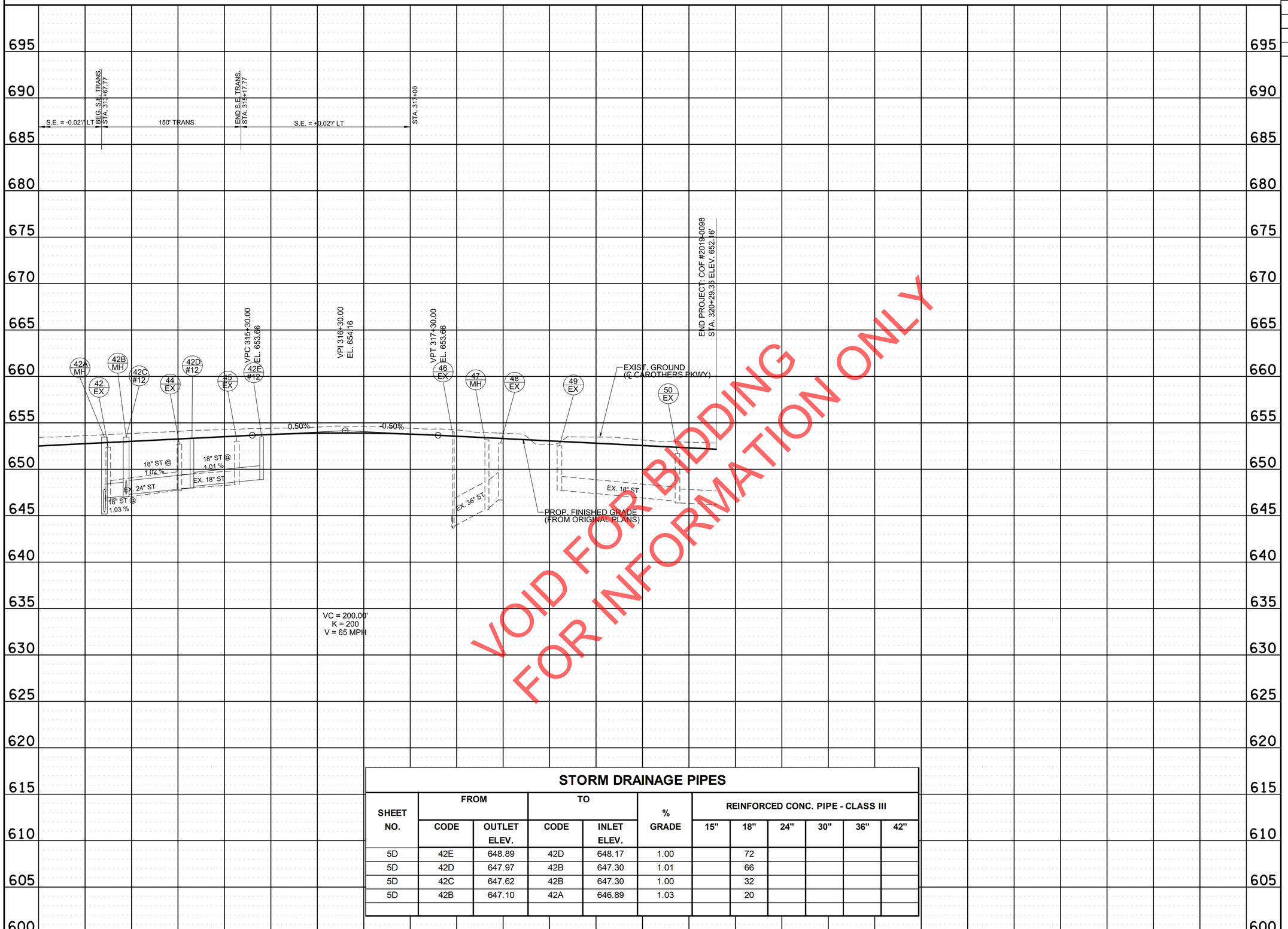

VOID FOR BIDDING
FOR INFORMATION ONLY

STORM DRAINAGE PIPES

SHEET NO.	FROM		TO		% GRADE	REINFORCED CONC. PIPE - CLASS III					
	CODE	OUTLET ELEV.	CODE	INLET ELEV.		15"	18"	24"	30"	36"	42"
5D	42E	648.89	42D	648.17	1.00		72				
5D	42D	647.97	42B	647.30	1.01		66				
5D	42C	647.62	42B	647.30	1.00		32				
5D	42B	647.10	42A	646.89	1.03		20				

SEALED BY

BRIAN A. RALSTIN
REGISTERED ENGINEER
AGRICULTURE COMMERCE
No. 119683
STATE OF TENNESSEE
9/18/2020

HISTORIC FRANKLIN TENNESSEE

CITY OF FRANKLIN
ENGINEERING DEPARTMENT

PROPOSED PROFILE

CAROTHERS PKWY
STA. 313+00 TO STA. 320+29.35

SCALE: 1"= 50' HORIZ.
1"= 5' VERT.

9/21/2020 8:40:32 AM
Y:\Nashville\16019000S\16019033.00\Eng_Docs\Roadway\005B.sht

TYPE	YEAR	PROJECT NO.	SHEET NO.
CONST.	2020	COF# 2019-0098	5C

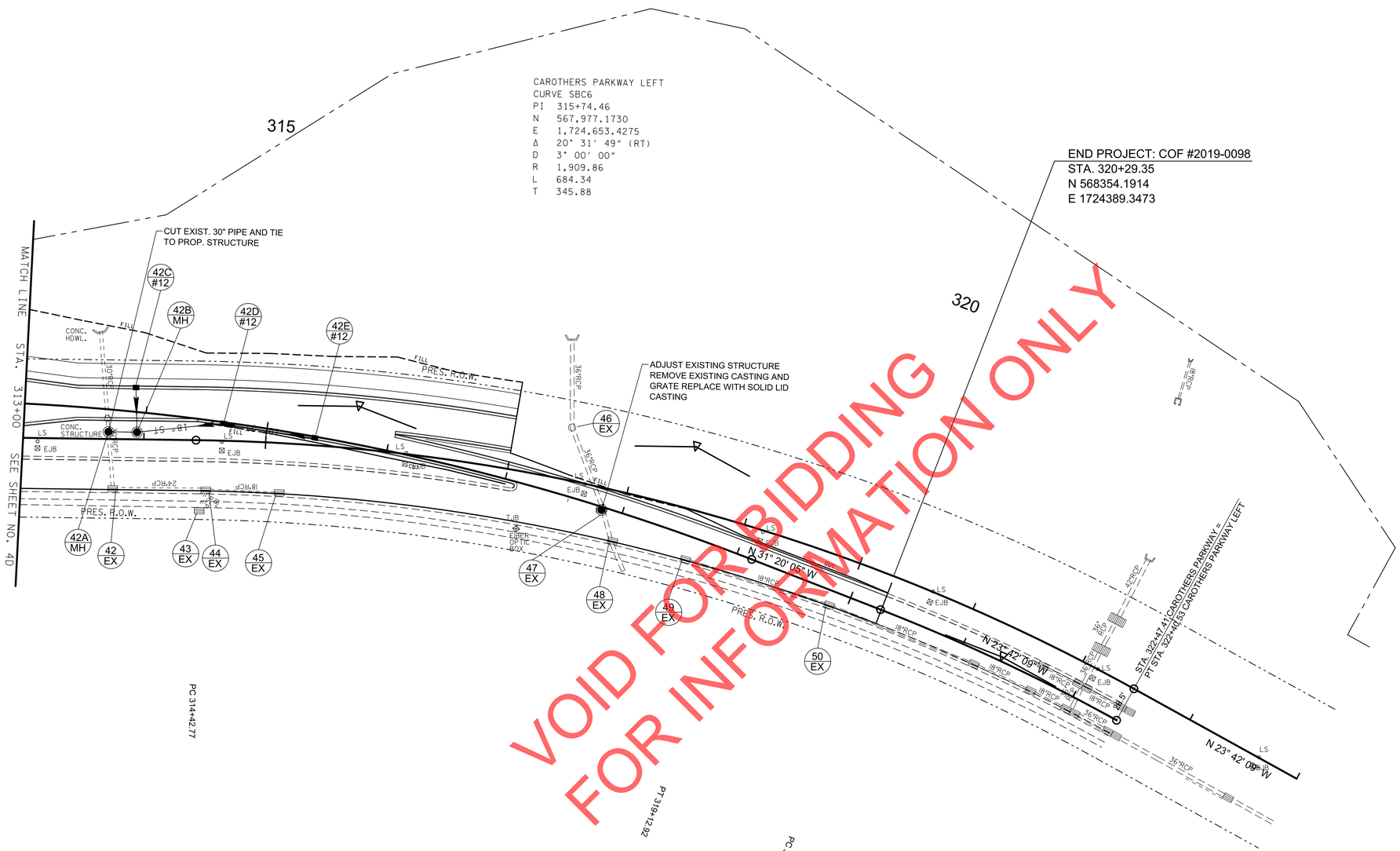

VOID FOR BIDDING
FOR INFORMATION ONLY

CAROTHERS PARKWAY
CURVE SBC3
PI 318+53.39
N 568,171.4550
E 1,724,453.7355
Δ 28° 09′ 44″ (RT)
D 3° 30′ 00″
R 1,637.02
L 804.63
T 410.62
SE 0.020 FT/FT
DESIGN SPEED 40 MPH
TRANS. LENGTH 150

42A MH — GT. EL. 653.32
IN. EL. 646.89
OUT.EL. EX.

42B MH — GT. EL. 653.46
IN. EL. 647.30
IN. EL. 647.30
OUT.EL. 647.10

42C #12 — GT. EL. 652.51
OUT.EL. 647.62

42D #12 — GT. EL. 653.28
IN. EL. 648.17
OUT.EL. 647.97

42E #12 — GT. EL. 653.50
OUT.EL. 648.89

CAROTHERS PARKWAY LEFT
CURVE SBC7
PI 321+33.62
N 568,461.1156
E 1,724,358.7853
Δ 7° 37′ 55″ (RT)
D 3° 33′ 51″
R 1,607.52
L 214.13
T 107.22

COORDINATES ARE NAD 83(1983), ARE DATUM ADJUSTED BY THE FACTOR OF 1.000082257 AND TIED TO THE TGRN. ALL ELEVATIONS ARE REFERENCED TO THE NAVD 1988 WITH GEOID 2003.

SEALED BY

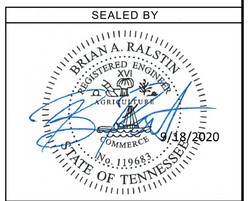

HISTORIC FRANKLIN TENNESSEE

CITY OF FRANKLIN
ENGINEERING DEPARTMENT

DRAINAGE LAYOUT

STA. 313+00 TO STA. 323+00

SCALE: 1"= 50'

9/21/2020 8:40:35 AM
Y:\Nashville\16019000S\16019033.00\Eng_Docs\Roadway\005C.sht

TYPE	YEAR	PROJECT NO.	SHEET NO.
CONST.	2020	COF# 2019-0098	6

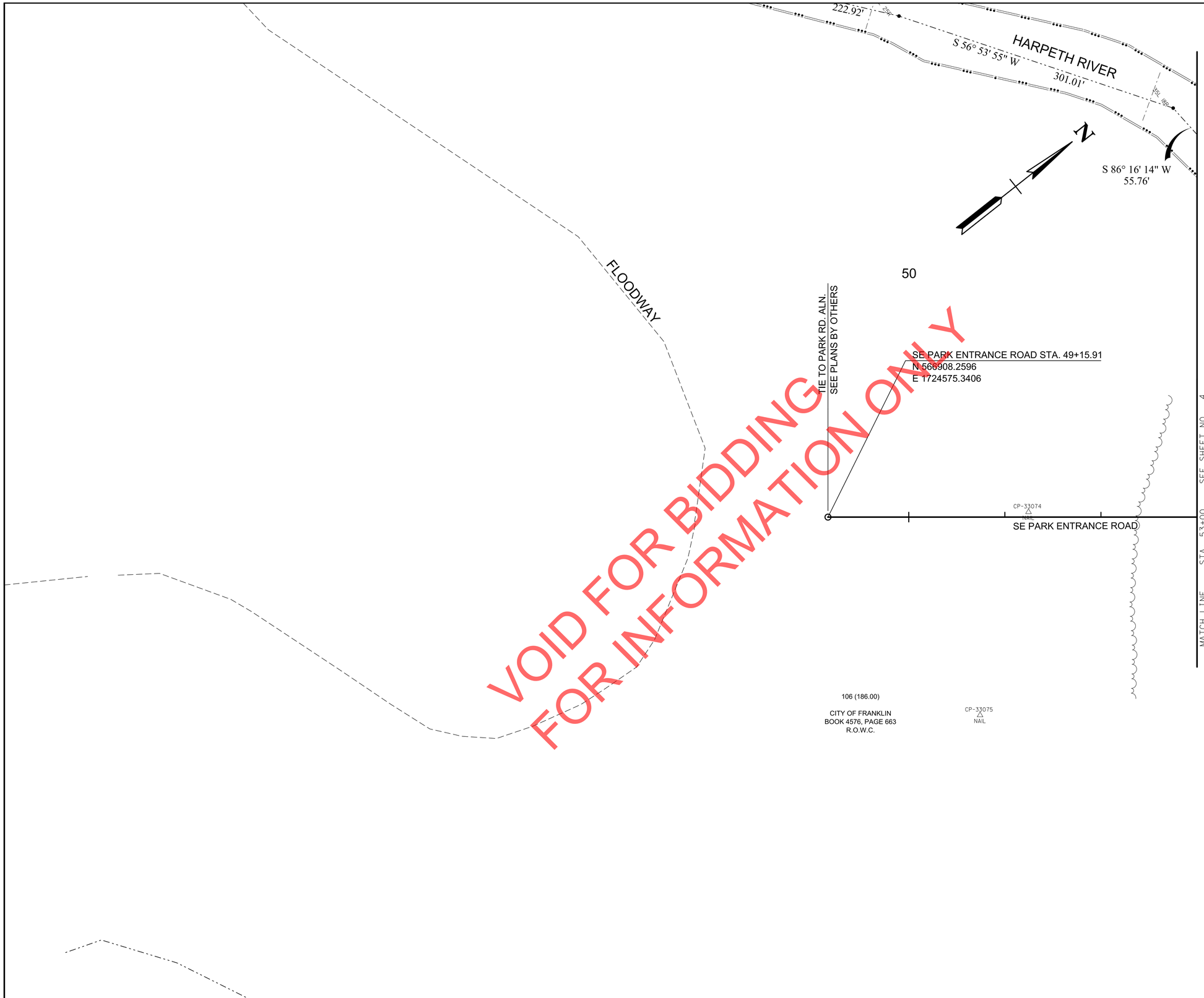

VOID FOR BIDDING
FOR INFORMATION ONLY

COORDINATES ARE NAD 83(1983), ARE DATUM ADJUSTED BY THE FACTOR OF 1.000082257 AND TIED TO THE TGRN. ALL ELEVATIONS ARE REFERENCED TO THE NAVD 1988 WITH GEOID 2003.

SEALED BY

BRIAN A. RALSTIN
REGISTERED ENGINEER
No. 119683
STATE OF TENNESSEE
9/18/2020

HISTORIC FRANKLIN TENNESSEE

CITY OF FRANKLIN
ENGINEERING DEPARTMENT

PRESENT LAYOUT

STA.47+00 TO STA.53+00

SCALE: 1"= 50'

9/21/2020 8:40:37 AM
Y:\Nashville\16019000S\16019033.00\Eng_Docs\Roadway\006.sht

TYPE	YEAR	PROJECT NO.	SHEET NO.
CONST.	2020	COF# 2019-0098	6A

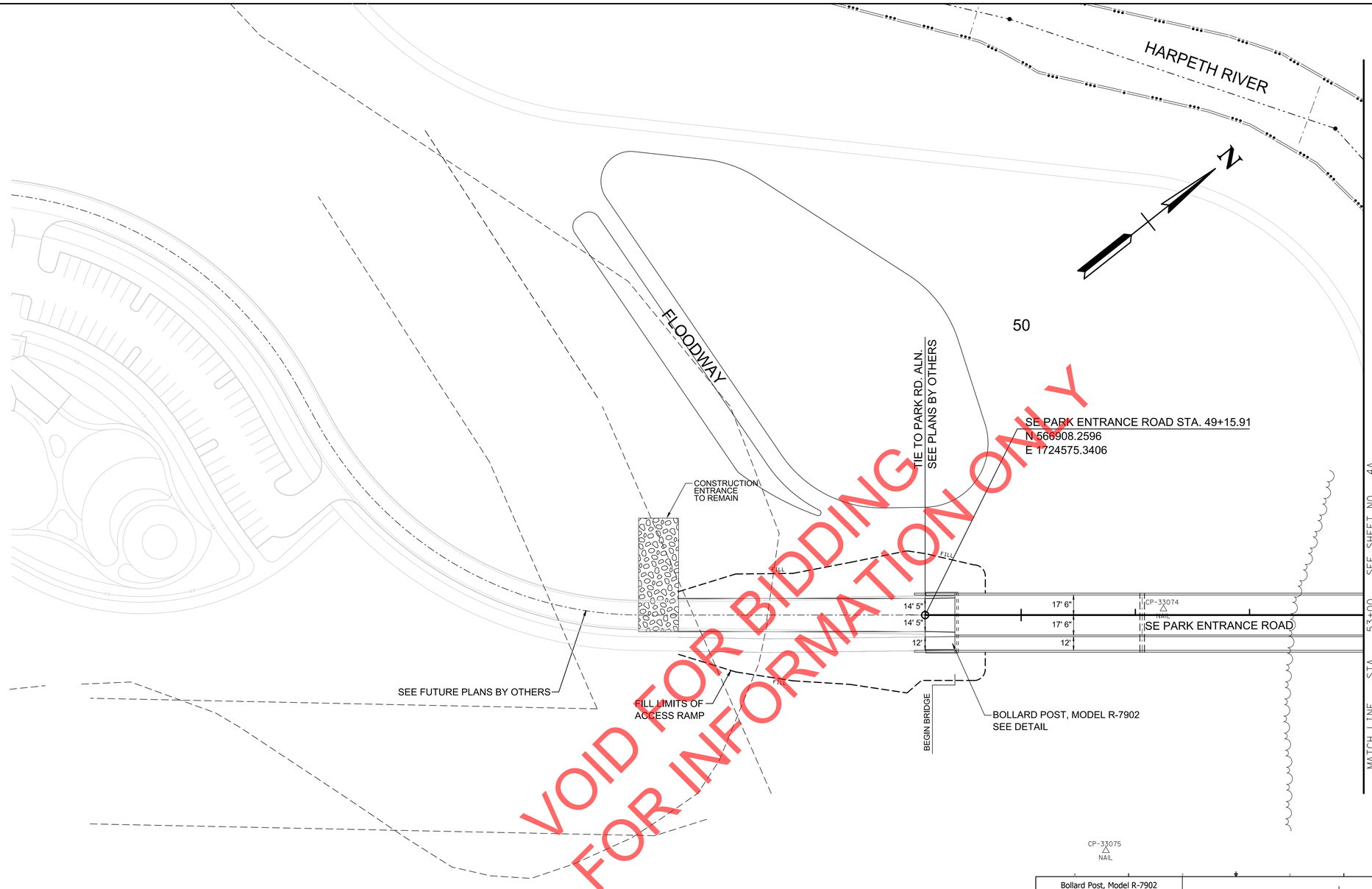

VOID FOR BIDDING
FOR INFORMATION ONLY

CP-33075
NAIL

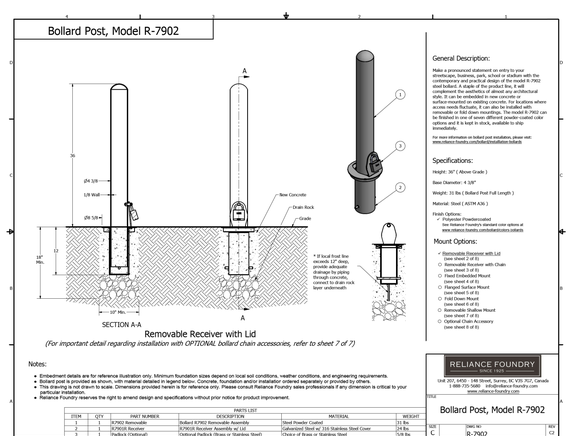

COORDINATES ARE NAD 83(1983), ARE DATUM ADJUSTED BY THE FACTOR OF 1.000082257 AND TIED TO THE TGRN. ALL ELEVATIONS ARE REFERENCED TO THE NAVD 1988 WITH GEOID 2003.

SEALED BY

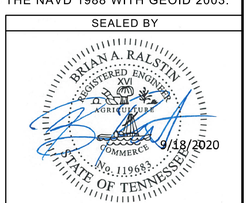

HISTORIC FRANKLIN TENNESSEE

CITY OF FRANKLIN
ENGINEERING DEPARTMENT

PROPOSED LAYOUT

STA. 47+00 TO STA. 53+00

SCALE: 1"= 50'

9/21/2020 8:40:39 AM
Y:\Nashville\16019000S\16019033.00\Eng_Docs\Roadway\006A.sht

TYPE	YEAR	PROJECT NO.	SHEET NO.
CONST.	2020	COF# 2019-0098	6B

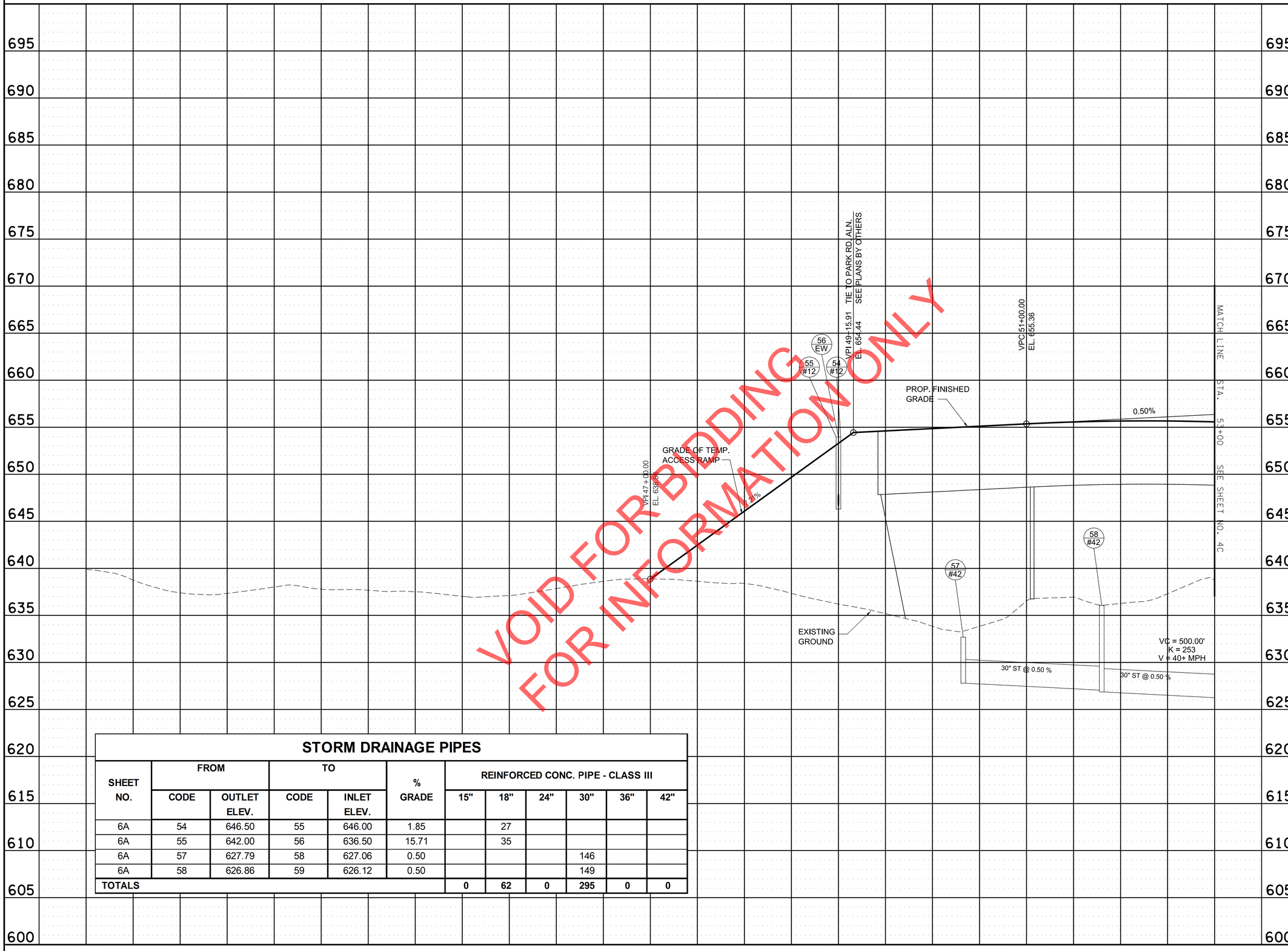

VOID FOR BIDDING
FOR INFORMATION ONLY

STORM DRAINAGE PIPES

SHEET NO.	FROM CODE	FROM OUTLET ELEV.	TO CODE	TO INLET ELEV.	% GRADE	REINFORCED CONC. PIPE - CLASS III 15"	18"	24"	30"	36"	42"
6A	54	646.50	55	646.00	1.85		27				
6A	55	642.00	56	636.50	15.71		35				
6A	57	627.79	58	627.06	0.50				146		
6A	58	626.86	59	626.12	0.50				149		
TOTALS						0	62	0	295	0	0

SEALED BY

BRIAN A. RALSTIN
REGISTERED ENGINEER
No. 119683
STATE OF TENNESSEE
9/18/2020

HISTORIC FRANKLIN TENNESSEE

CITY OF FRANKLIN
ENGINEERING DEPARTMENT

PROPOSED PROFILE

SE PARK ENTRANCE

SCALE: 1"= 50' HORIZ.
1"= 5' VERT.

9/21/2020 8:40:43 AM
Y:\Nashville\16019000S\16019033.00\Eng_Docs\Roadway\006B.sht

TYPE	YEAR	PROJECT NO.	SHEET NO.
CONST.	2020	COF# 2019-0098	6C

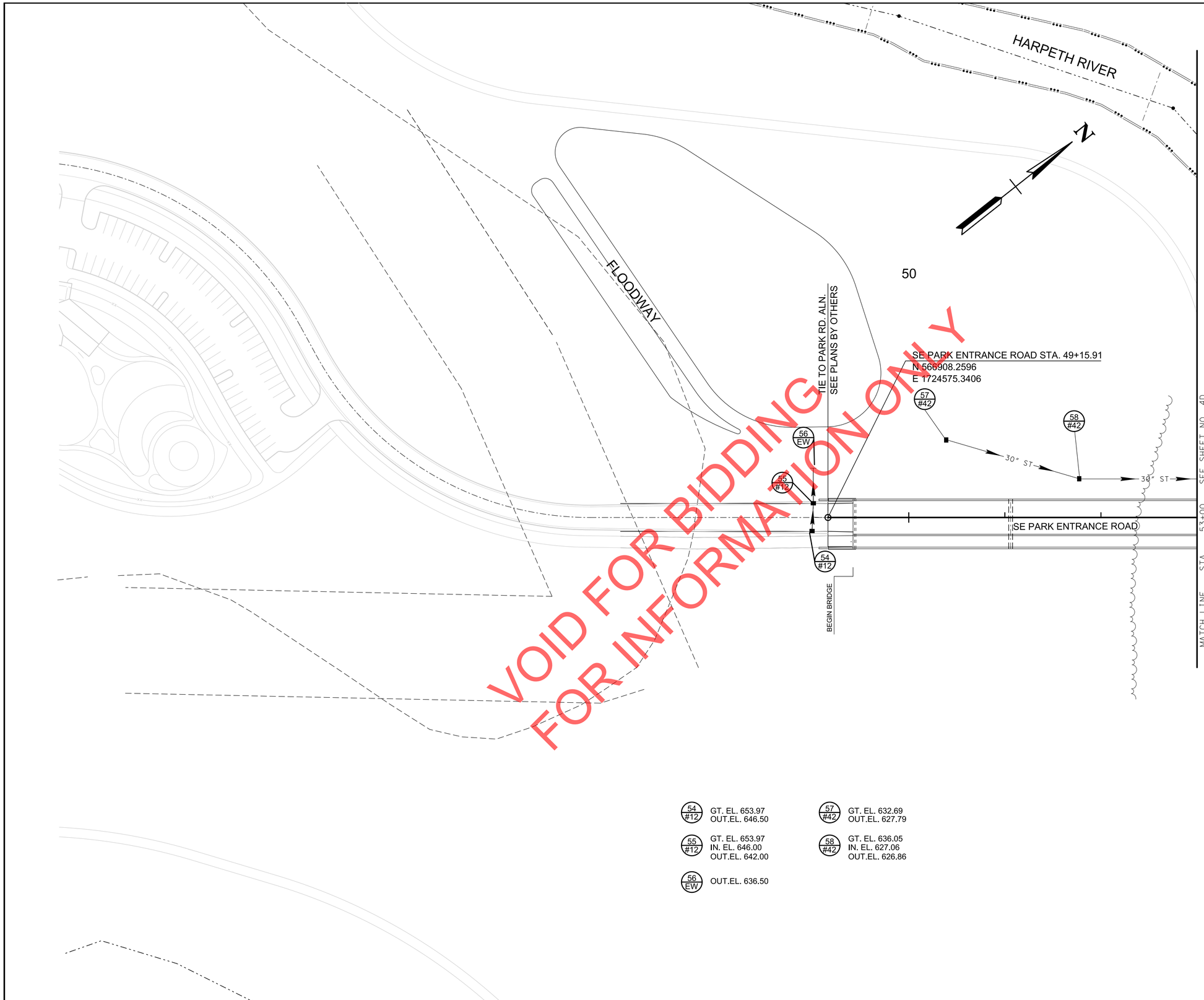

54 #12 GT. EL. 653.97
OUT.EL. 646.50

55 #12 GT. EL. 653.97
IN. EL. 646.00
OUT.EL. 642.00

56 EW OUT.EL. 636.50

57 #42 GT. EL. 632.69
OUT.EL. 627.79

58 #42 GT. EL. 636.05
IN. EL. 627.06
OUT.EL. 626.86

COORDINATES ARE NAD 83(1983), ARE DATUM ADJUSTED BY THE FACTOR OF 1.000082257 AND TIED TO THE TGRN. ALL ELEVATIONS ARE REFERENCED TO THE NAVD 1988 WITH GEOID 2003.

SEALED BY

BRIAN A. RALSTIN
REGISTERED ENGINEER
XVI
AGRICULTURE
COMMERCE
No. 119683
STATE OF TENNESSEE
9/18/2020

HISTORIC FRANKLIN TENNESSEE

CITY OF FRANKLIN
ENGINEERING DEPARTMENT

DRAINAGE LAYOUT

STA. 47+00 TO STA. 53+00

SCALE: 1"= 50'

9/21/2020 8:40:48 AM
Y:\Washville\16019000S\16019033.00\Eng_Docs\Roadway\006C.sht

TYPE	YEAR	PROJECT NO.	SHEET NO.
CONST.	2020	COF# 2019-0098	6D

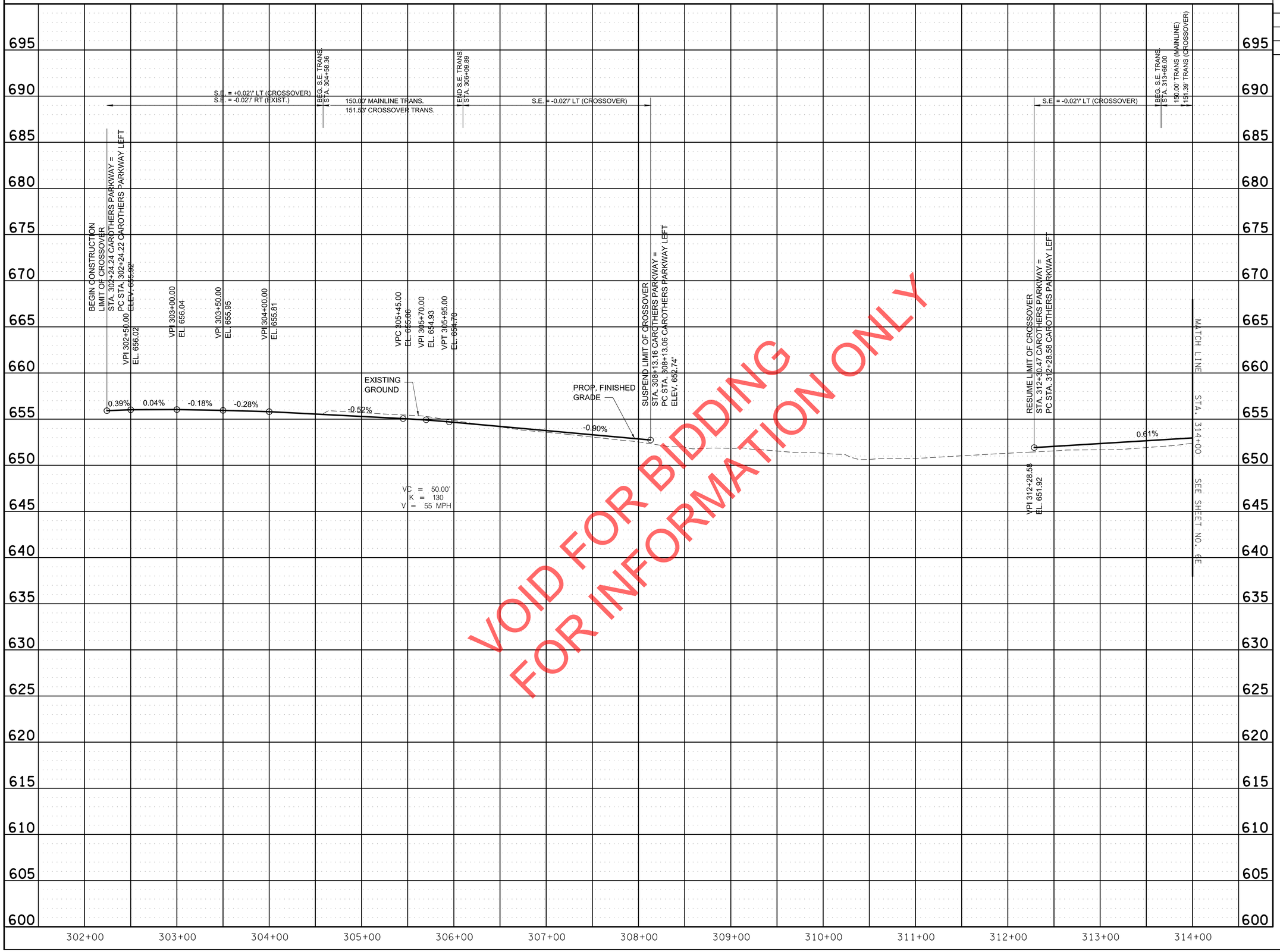

VOID FOR BIDDING
FOR INFORMATION ONLY

SEALED BY

BRIAN A. RALSTIN
REGISTERED ENGINEER
No. 119683
STATE OF TENNESSEE
9/18/2020

HISTORIC
FRANKLIN
TENNESSEE

CITY OF FRANKLIN
ENGINEERING DEPARTMENT

PROPOSED PROFILE

CAROTHERS PKWY LEFT
STA. 302+24.22 TO STA. 314+00

SCALE: 1"= 50' HORIZ.
1"= 5' VERT.

9/21/2020 8:40:49 AM
Y:\Nashville\16019000S\16019033.00\Eng_Docs\Roadway\006D.sht

TYPE	YEAR	PROJECT NO.	SHEET NO.
CONST.	2020	COF# 2019-0098	6E

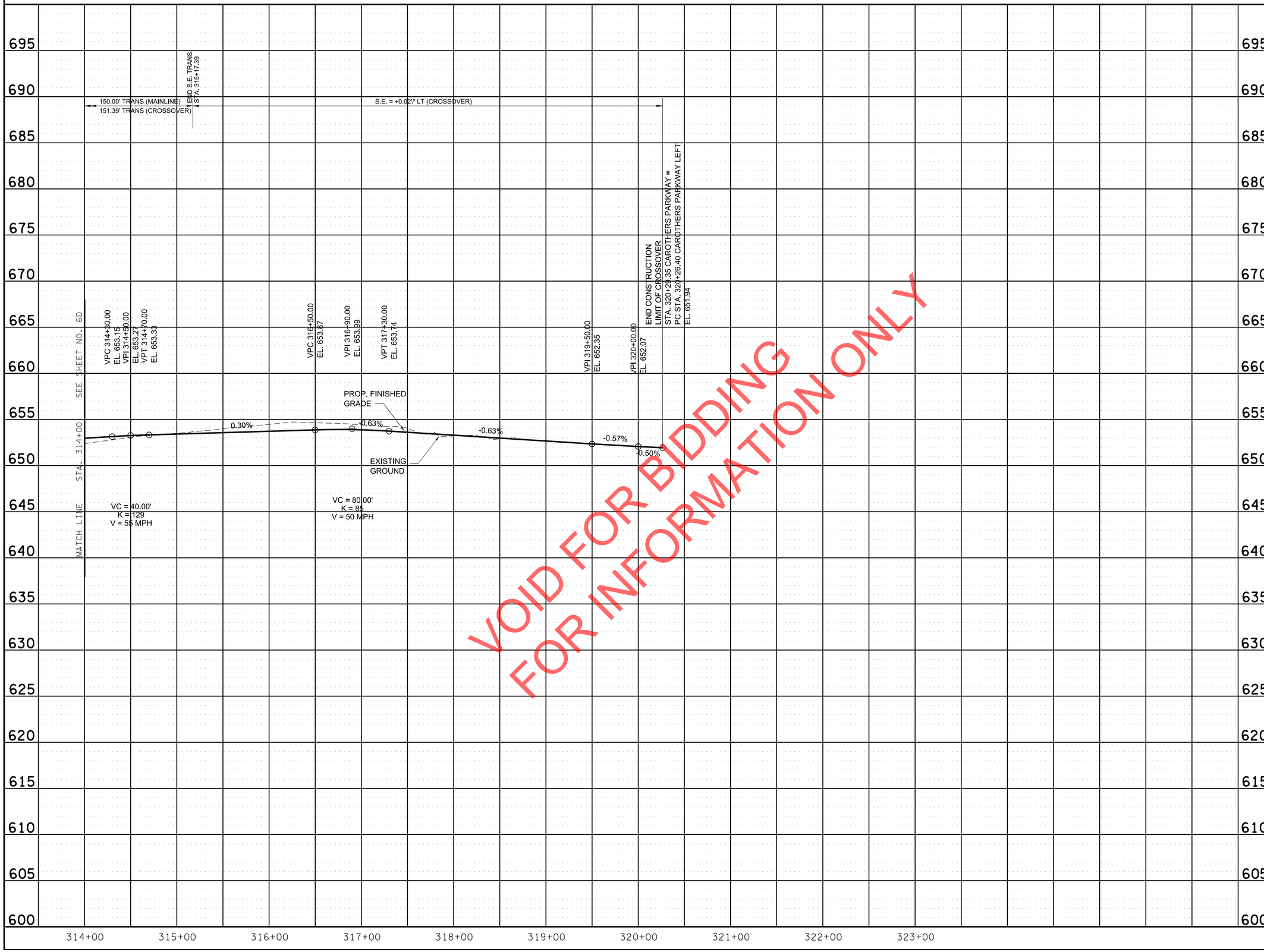

VOID FOR BIDDING
FOR INFORMATION ONLY

SEALED BY

BRIAN A. RALSTIN
REGISTERED ENGINEER
XVI
AGRICULTURE
COMMERCE
No. 119683
STATE OF TENNESSEE
9/18/2020

HISTORIC
FRANKLIN
TENNESSEE

CITY OF FRANKLIN
ENGINEERING DEPARTMENT

PROPOSED PROFILE

CAROTHERS PKWY LEFT
STA. 314+00 TO STA. 322+40.53

SCALE: 1"= 50' HORIZ.
1"= 5' VERT.

9/21/2020 8:40:51 AM
Y:\Nashville\16019000S\16019033.00\Eng_Docs\Roadway\006E.sht

TYPE	YEAR	PROJECT NO.	SHEET NO.
CONST.	2020	COF# 2019-0098	7

EPSC NOTES

STREAMS, WETLANDS & BUFFER ZONES

(1) ANY WORK WITHIN THE STREAM CHANNEL AREA (E.G., PIER FOOTING, RIP-RAP PLACEMENT, CULVERT/BRIDGE CONSTRUCTION, ETC.) SHALL BE SEPARATED FROM FLOWING WATER OR EXPECTED FLOW PATH AND PERFORMED DURING LOW FLOW CONDITIONS. ALL ITEMS USED WITHIN THE STREAM CHANNEL AREA FOR DIVERSION OF FLOW (OR EXPECTED FLOW), UNLESS SPECIFIED IN THE PLANS, SHALL NOT BE PAID FOR DIRECTLY BUT SHALL BE INCLUDED IN THE COST OF OTHER ITEMS. THIS NOTE EXCLUDES ANY ITEMS SPECIFIED IN THE PLANS FOR THE TEMPORARY DIVERSION CHANNELS (EC-STR-31) AND TEMPORARY DIVERSION CULVERTS (EC STR-32) FOR SINGLE BARREL CULVERT CONSTRUCTION.

UTILITY RELOCATION

(1) STORMWATER WHICH COLLECTS IN THE UTILITY TRENCH SHALL BE PUMPED INTO A DEWATERING STRUCTURE OR SEDIMENT FILTER BAG AND TREATED PRIOR TO DISCHARGE.

(2) SILT FENCE SHALL BE INSTALLED ON THE DOWNGRADIENT SIDE OF STOCKPILED SOIL. TRENCHING ACROSS WET WEATHER CONVEYANCES SHALL BE DONE DURING DRY CONDITIONS AND STABILIZED BY THE END OF THE WORK DAY.

(3) UTILITY CROSSINGS IN ENVIRONMENTAL FEATURES SHALL BE CONSTRUCTED IN ACCORDANCE WITH CITY AND STATE STANDARDS AND NO WORK SHALL BE CONDUCTED IN FLOWING WATERS. ENVIRONMENTAL PERMITS APPLY TO UTILITIES IN THIS PROJECT. THE STATE CONTRACTOR SHALL COMPLY WITH ALL REQUIREMENTS OF THE PERMITS.

(4) IT IS THE RESPONSIBILITY OF THE UTILITY CONTRACTOR TO PROTECT EXPOSED EARTH FROM EROSION AND TO PROVIDE FOR CONTAINMENT OF SEDIMENT THAT MAY RESULT FROM THEIR WORK. PRIOR TO BEGINNING WORK, ADEQUATE MEASURES MUST BE IN PLACE TO TRAP ANY SEDIMENT THAT MAY TRAVEL OFFSITE IN THE EVENT OF RAIN. DURING THE PROGRESSION OF THEIR WORK, EXPOSED EARTH AREAS SHALL BE STABILIZED AS SOON AS POSSIBLE TO PREVENT EROSION. AT NO TIME SHALL EXPOSED EARTH RESULTING FROM THEIR OPERATIONS HAVE UNPROTECTED ACCESS TO FLOWING OFFSITE AND ENTERING WATERS OF THE STATE/U.S.

(5) FOR THE INSTALLATION OF BURIED UTILITIES (PIPES AND CABLES), TRENCHES SHALL BE BACKFILLED DAILY AS CONSTRUCTION PROCEEDS. BACKFILLED TRENCHES SHALL BE SEEDED AND MULCHED OR SODDED DAILY IF POSSIBLE, BUT NO LATER THAN SEVEN DAYS AFTER BEING BACKFILLED. ANY TEMPORARY SPOILS OF EXCAVATED EARTH SHALL BE LOCATED WITHIN THE PROJECT'S EPSC MEASURES OR RECEIVE SEPARATE EPSC MEASURES. IF TRENCHES ARE NOT BACKFILLED OVERNIGHT, APPROPRIATE EPSC MEASURES WILL BE INSTALLED BY THE UTILITY CONTRACTOR UNTIL SUCH TIME AS THE TRENCH IS BACKFILLED.

(6) IN REGARD TO EPSC, TDEC REGULATIONS APPLY TO THE UTILITY CONTRACTORS ON THIS PROJECT. THE CONTRACTOR IS RESPONSIBLE FOR EPSC MEASURES RELATED TO UTILITY CONSTRUCTION INCLUDED IN THE CONTRACT.

(7) TRENCHES FORMED FOR THE INSTALLATION OF BURIED UTILITIES MAY CAUSE STORMWATER RUNOFF TO CONCENTRATE AT THE TRENCH LINE. ADDITIONAL EPSC MEASURES MAY BE REQUIRED TO BE INSTALLED AS APPROVED BY THE CITY OF FRANKLIN PROJECT RESPONSIBLE PARTY.

(8) FOR THE INSTALLATION OF UNDERGROUND UTILITIES OUTSIDE OF THE CITY OF FRANKLIN RIGHT-OF-WAY, EPSC MEASURES SHALL BE INSTALLED PRIOR TO CLEARING (TRENCHING AND ASSOCIATED BLASTING) IN THOSE AREAS NECESSARY TO PREVENT SEDIMENT FROM LEAVING THE CONSTRUCTION AREA. THESE EPSC MEASURES SHALL REMAIN UNTIL THE BACKFILLED TRENCH IS STABILIZED WITH FINAL VEGETATIVE COVER.

(9) THE UTILITY CONTRACTOR SHALL RESTORE ALL AFFECTED WET WEATHER CONVEYANCES TO THE EXISTING TOPOGRAPHIC CONDITIONS AS APPROVED BY THE CITY OF FRANKLIN RESPONSIBLE PARTY.

(10) THE UTILITY CONTRACTOR WILL PROVIDE APPROPRIATE EPSC MEASURES TO REPLACE ONSITE EPSC MEASURES REMOVED TO FACILITATE THE INSTALLATION OF UTILITIES. REPLACEMENT OF EPSC MEASURES WILL BE COORDINATED WITH THE CITY OF FRANKLIN RESPONSIBLE PARTY BEFORE COMMENCING WORK.

ENVIRONMENTAL

(1) EXCEPT AS OTHERWISE SPECIFIED, THERE ARE NO KNOWN SPECIAL ENVIRONMENTAL FACTORS PRESENT ON THIS PROJECT THAT INDICATE A NEED FOR SEASONAL LIMITATIONS ON THE CLEARING, GRUBBING, EXCAVATION, GRADING, CUTTING OR FILLING OPERATIONS OR ON THE TOTAL AREA OF EXPOSED SOIL.

EROSION PREVENTION AND SEDIMENT CONTROL QUANTITIES

	ITEM NO.	DESCRIPTION	UNIT	QUANTITY
(3)	203-50	CONSTRUCTION OF HAUL ROAD	L.S.	1
(2)(5)(6)	209-08.02	TEMPORARY SILT FENCE (WITH BACKING)	L.F.	13800
(2)(5)(6)(7)	209-08.08	ENHANCED ROCK CHECK DAM	EACH	35
(2)(4)(5)(6)(8)	209-09.03	SEDIMENT FILTER BAG (15' X 15')	EACH	6
(5)(6)	209-09.43	CURB INLET PROTECTION (TYPE 4)	EACH	46
(5)(6)	209-40.33	CATCH BASIN PROECTION (TYPE D)	EACH	28
(1)(2)	209-99.92	CONSTRUCTION ENTRANCE	L.S.	1
	707-08.11	HIGH-VISIBILITY CONSTRUCTION FENCE	L.F.	310
(2)(5)(6)	740-11.03	TEMPORARY SEDIMENT TUBE 18IN	L.F.	1000
(5)(6)(9)	801-01.07	TEMPORARY SEEDING (WITH MULCH)	UNIT	485

EPSC FOOTNOTES

(1)	PRICE INCLUDES ALL MATERIALS AND LABOR NECESSARY FOR CONSTRUCTION, MAINTENANCE AND REMOVAL OF ENHANCED ROCK CHECK DAMS AND INCLUDE MINERAL AGGREGATE (SIZE 57), MACHINED RIP-RAP (CLASS A-3) AND GEOTEXTILE FABRIC (TYPE III).
(2)	SPECIFICATIONS IS BASED ON TDOT STANDARDS WITH MODIFIED MEASUREMENT AND PAYMENT AS SHOWN ON THE BID FORM.
(3)	THIS LINE ITEM IS FOR EXISTING UTILITY ACCESS ROADWAY OUTSIDE THE LIMITS OF THE TEMPORARY CROSSING AS DETERMINED BY THE ENGINEER. IMPROVEMENTS SHALL BE BUILT ON TOP OF EXISTING GRADE AND SHALL REMAIN AT THE COMPLETION OF CONSTRUCTION.
(4)	UTILIZED FOR ANY GROUNDWATER PUMPING ACTIVITIES AS REQUIRED AS PART OF THIS PROJECT.
(5)	TO BE USED AS DIRECTED.
(6)	PAY ITEM TO INCLUDE ALL NECESSARY INCIDENTALS INCLUDING COST FOR SEDIMENT REMOVAL. SEE SUBSECTION 209.07 OF THE STANDARD SPECIFICATION FOR MAINTENANCE REPLACEMENT.
(7)	PRICE INCLUDES ALL MATERIALS AND LABOR NECESSARY FOR CONSTRUCTION, MAINTENANCE AND REMOVAL OF ENHANCED ROCK CHECK DAMS AND INCLUDE MINERAL AGGREGATE (SIZE 57), MACHINED RIP-RAP (CLASS A-1) AND GEOTEXTILE FABRIC (TYPE III).
(8)	PRICE INCLUDES ALL MATERIALS AND LABOR NECESSARY FOR CONSTRUCTION, MAINTENANCE, REMOVAL, BAG REPLACEMENT, 57 STONE, GEOTEXTILE FABRIC (TYPE III), SEDIMENT REMOVAL AND ROAD & DRAINAGE EXCAVATION AS NEEDED.
(9)	PRICE INCLUDES ALL INCIDENTALS INCLUDING COST FOR WATER.

EROSION PREVENTION AND SEDIMENT CONTROL LEGEND

SYMBOL	ITEM	STD. DWG.
* SFB* SFB* SFB*	SILT FENCE WITH WIRE BACKING	EC-STR-3C
	ENHANCED ROCK CHECK DAM (TRAPEZOIDAL DITCH)	EC-STR-6A
D	CATCH BASIN PROTECTION (TYPE D)	EC-STR-19
4	CURB INLET PROTECTION (TYPE 4)	EC-STR-39A
TCE	TEMPORARY CONSTRUCTION EXIT	EC-STR-25

VOID FOR BIDDING
FOR INFORMATION ONLY

SEALED BY

BRIAN A. RALSTIN
REGISTERED ENGINEER
XVI
AGRICULTURE
COMMERCE
No. 119683
STATE OF TENNESSEE
9/18/2020

HISTORIC FRANKLIN TENNESSEE

CITY OF FRANKLIN
ENGINEERING DEPARTMENT

EROSION PREVENTION & SEDIMENT CONTROL (EPSC) NOTES

9/29/2020 3:39:39 PM
Y:\Nashville\16019000S\16019033.00\Eng_Docs\Roadway\EPSC PHASE 1_000.sht

TYPE	YEAR	PROJECT NO.	SHEET NO.
CONST.	2020	COF# 2019-0098	7A

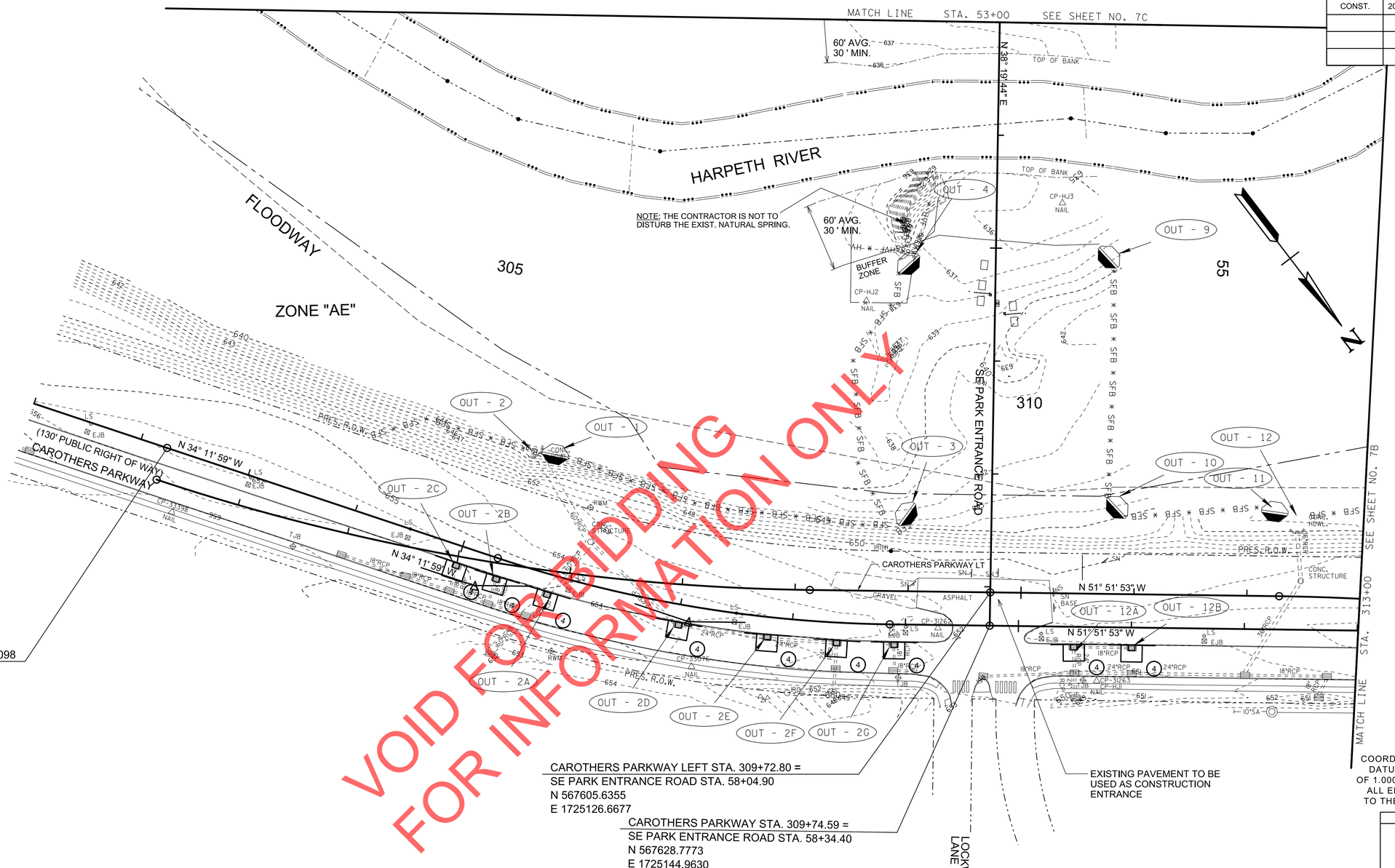

VOID FOR BIDDING
FOR INFORMATION ONLY

COORDINATES ARE NAD 83(1983), ARE DATUM ADJUSTED BY THE FACTOR OF 1.000082257 AND TIED TO THE TGRN. ALL ELEVATIONS ARE REFERENCED TO THE NAVD 1988 WITH GEOID 2003.

SEALED BY

BRIAN A. RALSTIN
REGISTERED ENGINEER
No. 119683
STATE OF TENNESSEE

9/18/2020

STAGE 1

CONTOUR LEGEND

—530— — EXISTING CONTOURS

——530—— PROPOSED CONTOURS

HISTORIC FRANKLIN TENNESSEE

CITY OF FRANKLIN
ENGINEERING DEPARTMENT

EPSC LAYOUT

STA. 53+00 TO STA. 58+34.40
STA. 302+00 TO STA. 313+00
SCALE: 1"= 50'

9/21/2020 8:41:05 AM
Y:\Nashville\16019000S\16019033.00\Eng_Docs\Roadway\EPSC PHASE 1_001.sht

TYPE	YEAR	PROJECT NO.	SHEET NO.
CONST.	2020	COF# 2019-0098	7B

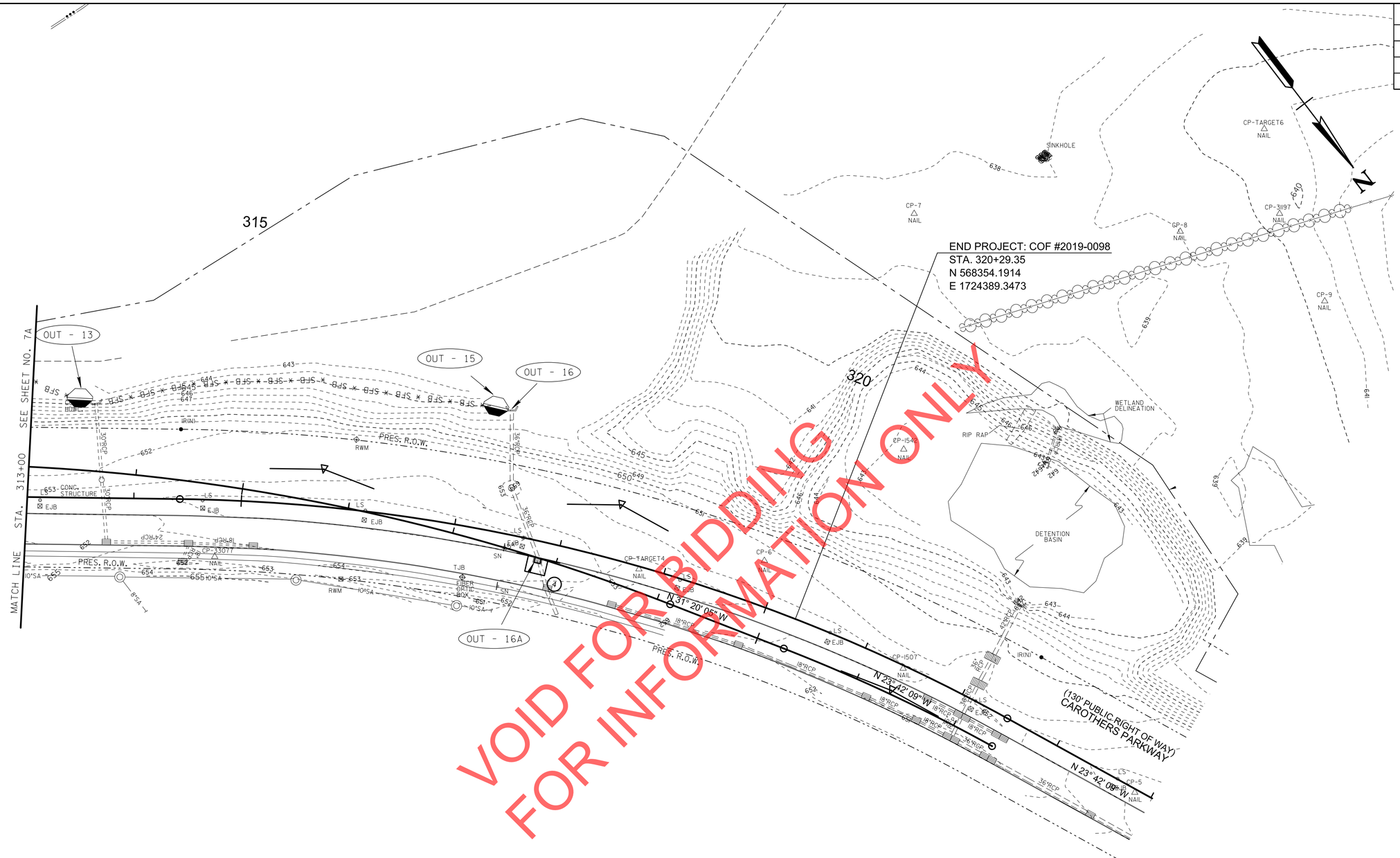

COORDINATES ARE NAD 83(1983), ARE DATUM ADJUSTED BY THE FACTOR OF 1.000082257 AND TIED TO THE TGRN. ALL ELEVATIONS ARE REFERENCED TO THE NAVD 1988 WITH GEOID 2003.

SEALED BY

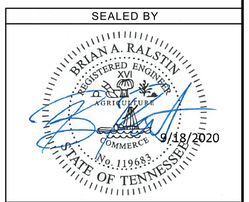

STAGE 1

CONTOUR LEGEND

—530— — EXISTING CONTOURS

——530—— PROPOSED CONTOURS

HISTORIC FRANKLIN TENNESSEE

CITY OF FRANKLIN
ENGINEERING DEPARTMENT

EPSC LAYOUT

STA. 313+00 TO STA. 323+00

SCALE: 1"= 50'

9/21/2020 8:41:06 AM
Y:\Nashville\16019000S\16019033.00\Eng_Docs\Roadway\EPSC PHASE 1_002.sht

TYPE	YEAR	PROJECT NO.	SHEET NO.
CONST.	2020	COF# 2019-0098	7C

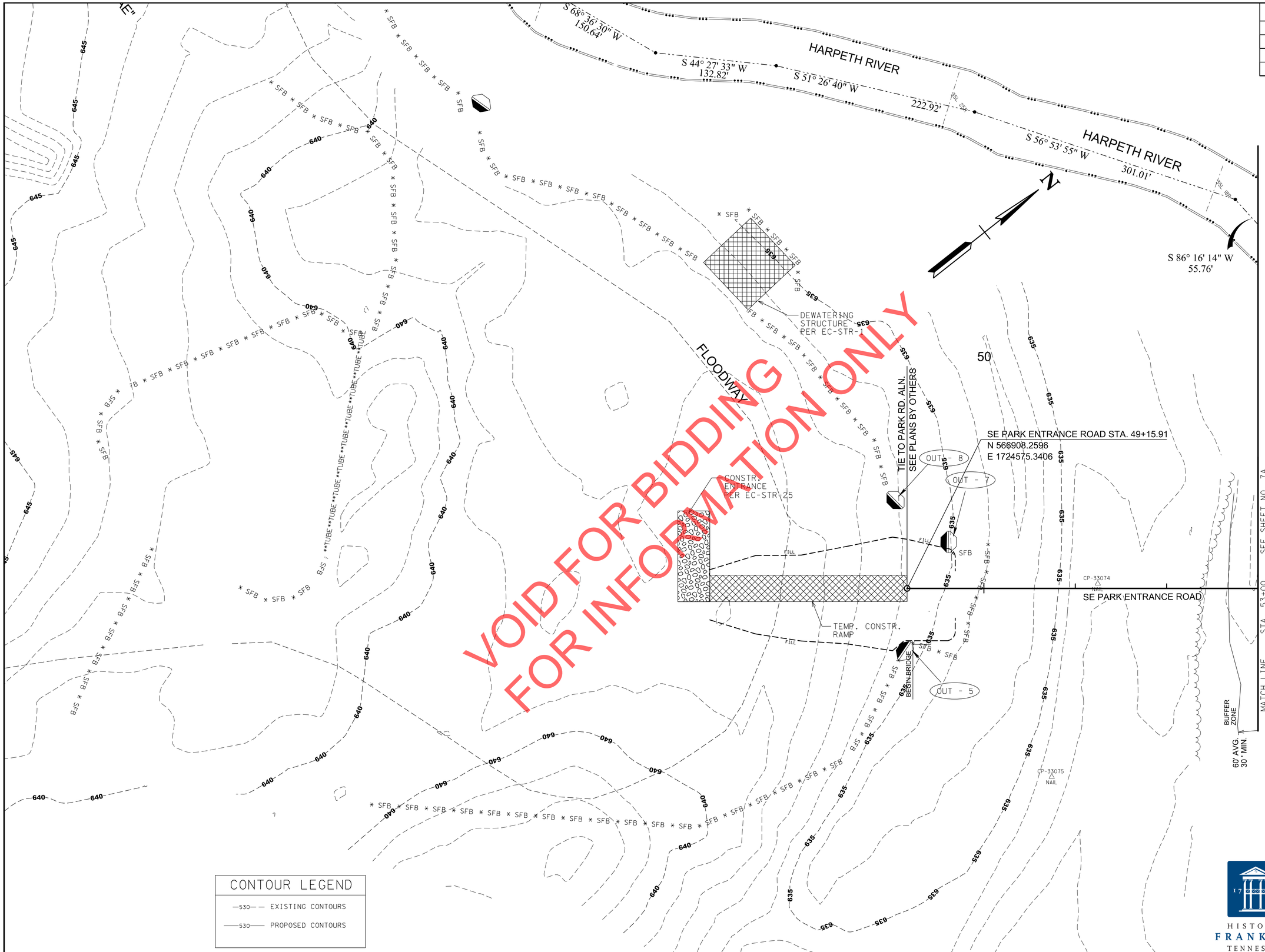

COORDINATES ARE NAD 83(1983), ARE DATUM ADJUSTED BY THE FACTOR OF 1.000082257 AND TIED TO THE TGRN. ALL ELEVATIONS ARE REFERENCED TO THE NAVD 1988 WITH GEOID 2003.

SEALED BY

BRIAN A. RALSTIN
REGISTERED ENGINEER
No. 119683
STATE OF TENNESSEE
9/18/2020

STAGE 1

CONTOUR LEGEND

—530— — EXISTING CONTOURS

——530—— PROPOSED CONTOURS

HISTORIC FRANKLIN TENNESSEE

CITY OF FRANKLIN
ENGINEERING DEPARTMENT

EPSC LAYOUT

STA.47+00 TO STA.53+00

SCALE: 1"= 50'

9/21/2020 8:41:08 AM
Y:\Nashville\16019000S\16019033.00\Eng_Docs\Roadway\EPSC PHASE 1_003.sht

TYPE	YEAR	PROJECT NO.	SHEET NO.
CONST.	2020	COF# 2019-0098	7D

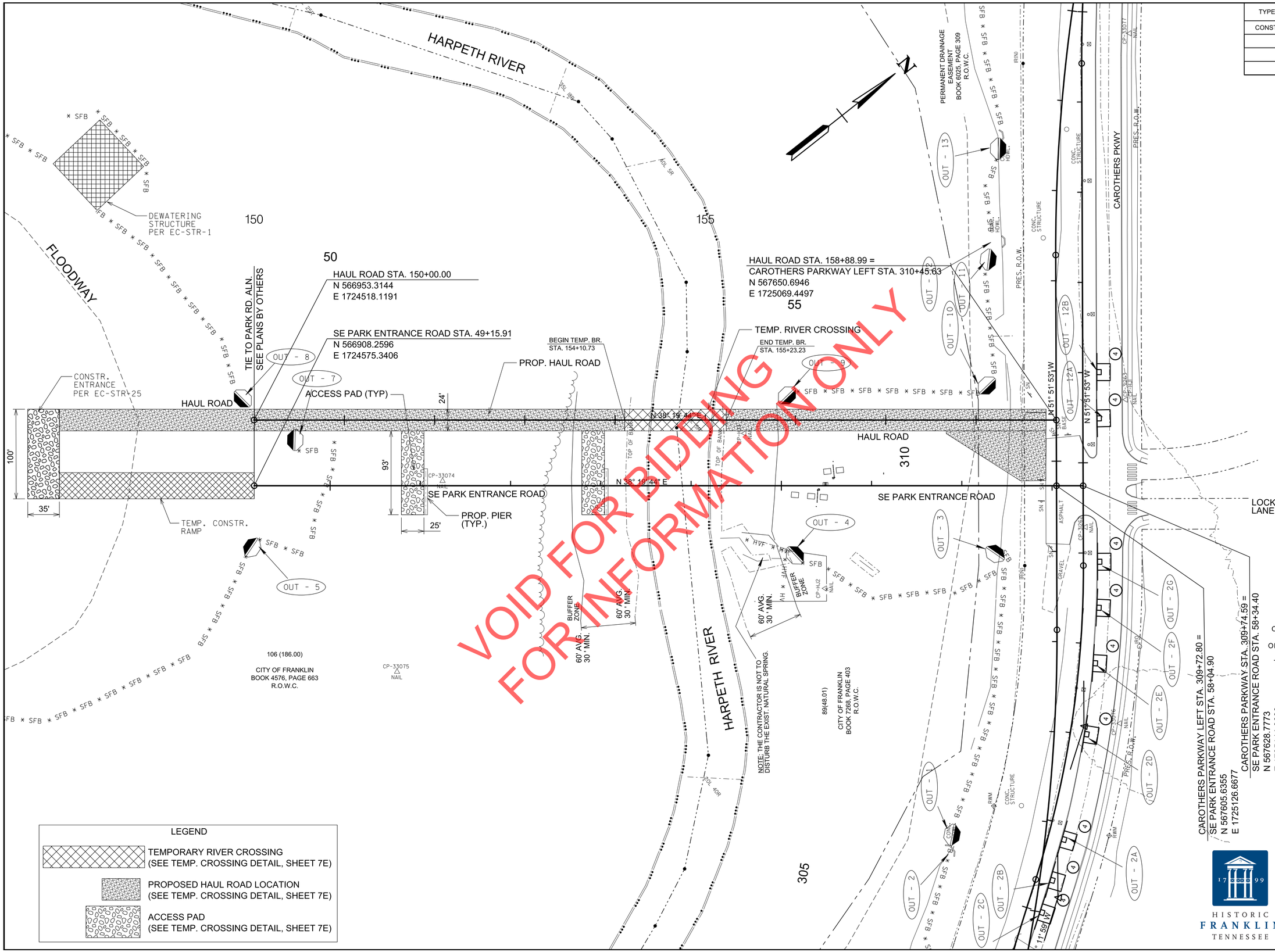

COORDINATES ARE NAD 83(1983), ARE DATUM ADJUSTED BY THE FACTOR OF 1.000082257 AND TIED TO THE TGRN. ALL ELEVATIONS ARE REFERENCED TO THE NAVD 1988 WITH GEOID 2003.

CAROTHERS PARKWAY LEFT STA. 309+72.80 =
SE PARK ENTRANCE ROAD STA. 58+04.90
N 567605.6355
E 1725126.6677

CAROTHERS PARKWAY STA. 309+74.59 =
SE PARK ENTRANCE ROAD STA. 58+34.40
N 567628.7773
E 1725144.9630

SEALED BY

BRIAN A. RALSTIN
REGISTERED ENGINEER
AGRICULTURE
COMMERCE
No. 119683
STATE OF TENNESSEE
9/18/2020

STAGE 1

LEGEND

- TEMPORARY RIVER CROSSING (SEE TEMP. CROSSING DETAIL, SHEET 7E)
- PROPOSED HAUL ROAD LOCATION (SEE TEMP. CROSSING DETAIL, SHEET 7E)
- ACCESS PAD (SEE TEMP. CROSSING DETAIL, SHEET 7E)

HISTORIC FRANKLIN TENNESSEE

CITY OF FRANKLIN
ENGINEERING DEPARTMENT

EPSC LAYOUT

HAUL ROAD DETAIL

STA.150+00 TO STA.158+88.99

SCALE: 1"= 50'

9/21/2020 8:41:10 AM
Y:\Nashville\16019000S\16019033.00\Eng_Docs\Roadway\EPSC PHASE 1_004_HaulRoad.sht

TYPE	YEAR	PROJECT NO.	SHEET NO.
CONST.	2020	COF# 2019-0098	7E

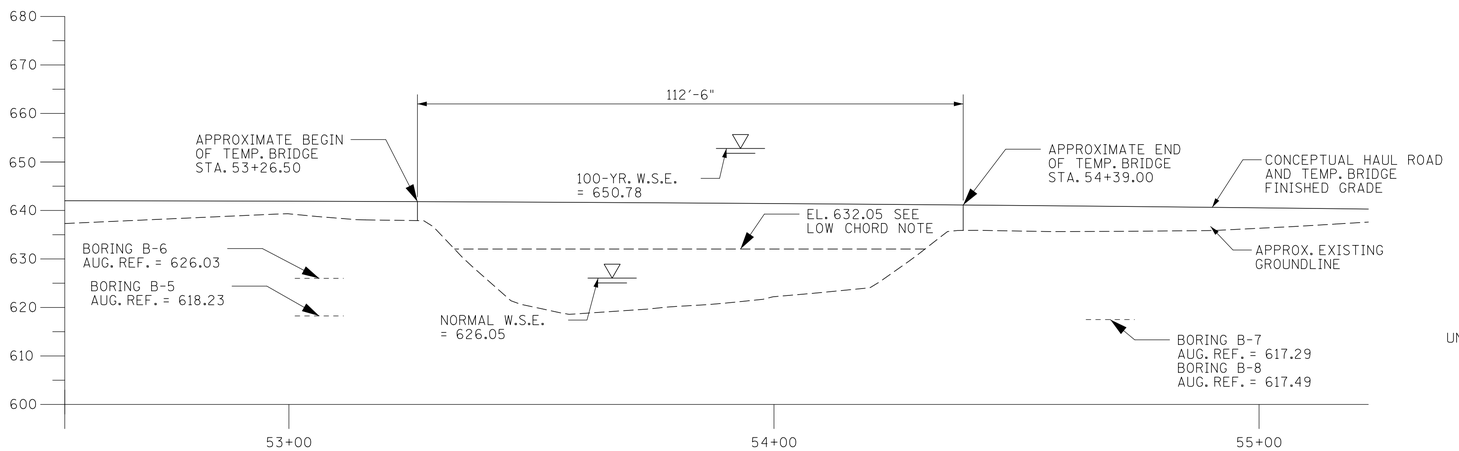

ELEVATION

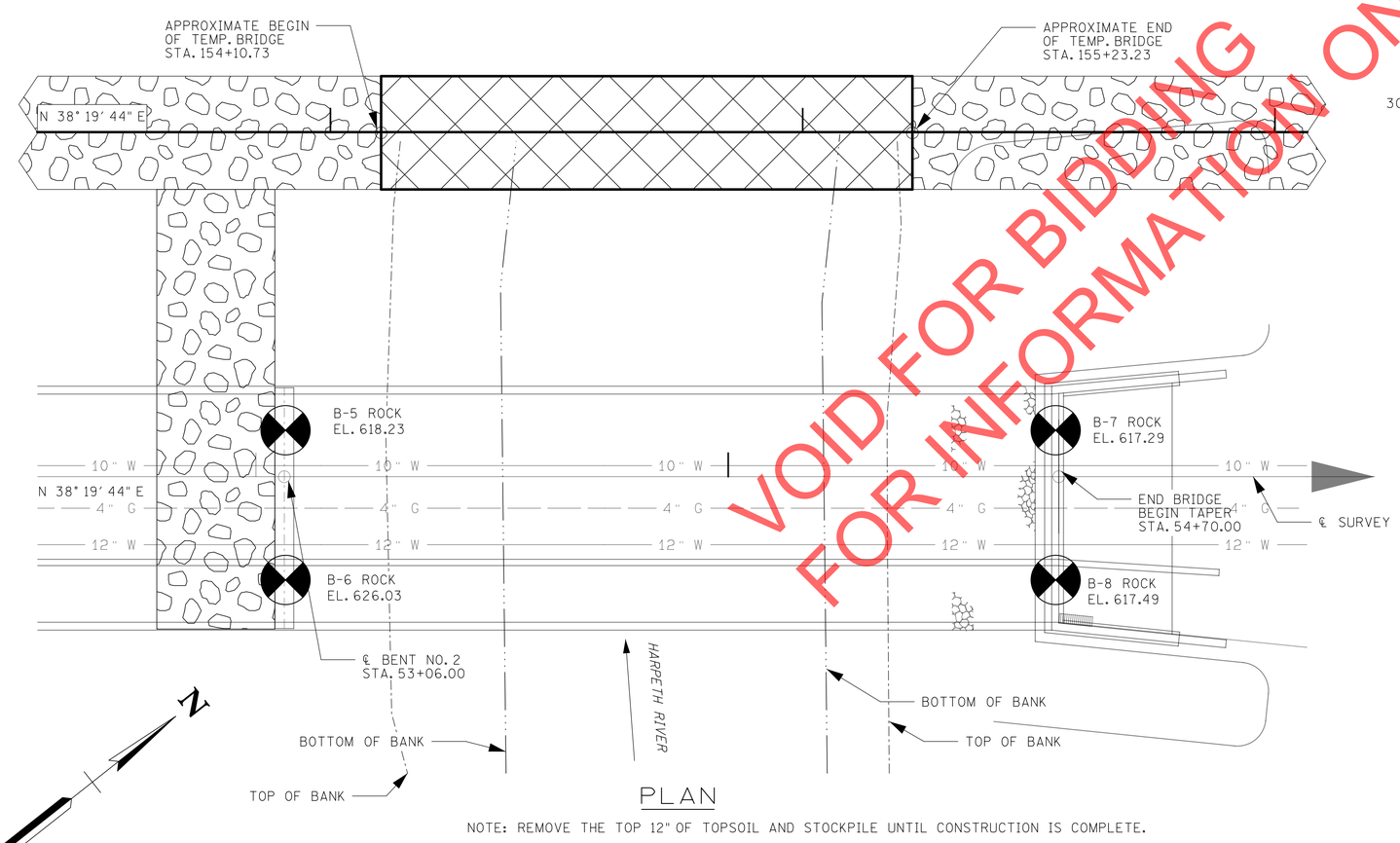

PLAN

NOTE: REMOVE THE TOP 12" OF TOPSOIL AND STOCKPILE UNTIL CONSTRUCTION IS COMPLETE.

NOTE: ONCE CONSTRUCTION ACTIVITIES ARE COMPLETED, COMPLETELY REMOVE THE STRUCTURE AND FOUNDATIONS, RESTORE BANK TO PRECONSTRUCTION SLOPES AND SPREAD STOCKPILED TOPSOIL BACK OVER THE SITE AND PLANT VEGETATION.

NOTE: STREAM BANK IMPACTS ARE TO BE LIMITED TO THE MINIMUM AREA REQUIRED TO CONSTRUCT THE TEMPORARY STREAM CROSSING.

NOTE: LIVE BRANCH PLANTINGS TO ALTERNATE ROWS OF 18"-24" CUTTINGS OF BLACK WILLOW (SALIX NIGRA) AND SILKY DOGWOOD (CORNUS AMOMUM).

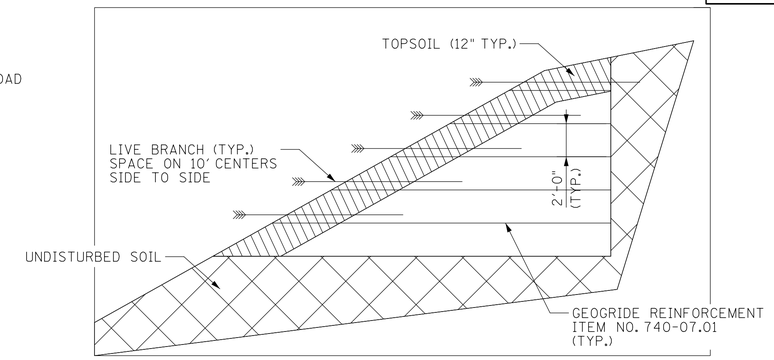

DETAIL FOR BANK REPAIR AFTER REMOVAL OF TEMPORARY BRIDGE

N.T.S.

LIVE BRANCH CUTTING TO ALTERNATE BETWEEN:
802-02.30 CUTTINGS: SALIX NIGRA (18"-24" LENGTH) PER EACH
802-02.32 CUTTINGS: CORNUS AMOMUM (18"-24" LENGTH) PER EACH

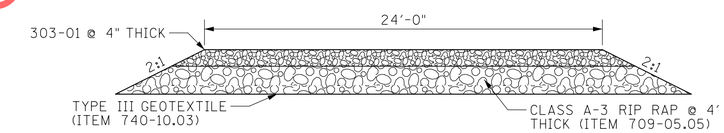

PROPOSED HAUL ROAD AND CRANE PAD DETAIL

HAUL ROAD IS MINIMUM 24'-0" WIDE. CONTRACTOR MAY LOCATE PASSING BAYS AS THEY DEEM NECESSARY BUT ADDITIONS TO HAUL ROAD QUANTITIES DUE TO ADDED PASSING BAYS WILL NOT BE PAID FOR BEYOND THE ORIGINAL CONTRACT PRICE..

CRANE PAD QUANTITIES ARE CALCULATED BASED ON 25'X93' PAD DIMENSIONS WITH 2:1 SLOPES AND 4'-0" OF CLASS A-3 RIP RAP AS SHOWN IN THE DETAIL. THE 4" OF 303-01 SHALL BE OMITTED. THE CONTRACTOR MAY LOCATE THE CRANE PADS AS NECESSARY

TEMPORARY CROSSING NOTES

CONTRACTOR MAY ELECT TO CONSTRUCT A TEMPORARY SINGLE SPAN STRUCTURE IN THE LOCATION INDICATED TO SUPPORT CONSTRUCTION MEANS AND METHODS. THE PROPOSED LENGTH AND WIDTH OF THE STRUCTURE MAY VARY BUT SHALL BE CONSTRUCTED ON THE HORIZONTAL ALIGNMENT SHOWN. CONTRACTOR SHALL SUBMIT DESIGN DRAWINGS AND CALCULATIONS FOR REVIEW AND APPROVAL. CONTRACTOR SHALL PROVIDE DESIGN SKETCHES AND SUPPORTING CALCULATIONS SEALED BY A ENGINEER LICENSED IN TENNESSEE SUFFICIENT TO DEMONSTRATE THE STABILITY OF THE STRUCTURE FOR CONSTRUCTION USE AND SITE ACCESS BY OWNER'S AGENTS.

LUMP SUM ITEM NO. 921-01.01 SHALL INCLUDE ALL COSTS ASSOCIATED WITH THE TEMPORARY RIVER CROSSING - INCLUDING DESIGN, CONSTRUCTION, REMOVAL, AND BANK RESTORATION AFTER REMOVAL.

TEMPORARY RIVER CROSSING LOCATION SHALL BE AS SHOWN ON SHEET 7D. ANY VARIANCE IN CROSSING LOCATION MUST BE APPROVED BY THE CITY OF FRANKLIN.

FOUNDATIONS FOR TEMPORARY RIVER CROSSING SHALL NOT ENCROACH INTO THE NORMAL WATER SURFACE ELEVATION OF THE HARPETH RIVER (ELEVATION 626.05).

LOW CHORD: TEMPORARY RIVER CROSSING SHALL MAINTAIN A LOW CHORD CLEARANCE ELEVATION OF 632.05 - 6'-0" ABOVE HARPETH RIVER NORMAL WATER SURFACE (ELEVATION 626.05)

CONTRACTOR SHALL MAKE PROVISIONS TO ENSURE SAFETY OF BOATERS ALONG THE HARPETH RIVER THROUGH THE CONSTRUCTION AREA.

COORDINATES ARE NAD 83(1983), ARE DATUM ADJUSTED BY THE FACTOR OF 1.000082257 AND TIED TO THE TGRN. ALL ELEVATIONS ARE REFERENCED TO THE NAVD 1988 WITH GEOID 2003.

SEALED BY

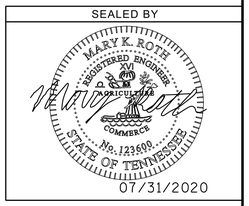

HISTORIC FRANKLIN TENNESSEE

CITY OF FRANKLIN
ENGINEERING DEPARTMENT

TEMPORARY CROSSING DETAILS

VOID FOR BIDDING
FOR INFORMATION ONLY

9/21/2020 8:41:12 AM
Y:\Washville\16019000S\16019033.00\Eng_Docs\Structures\DGN\Final Plans\SE Park_Temp Bridge Layout.dgn

TYPE	YEAR	PROJECT NO.	SHEET NO.
CONST.	2020	COF# 2019-0098	7F

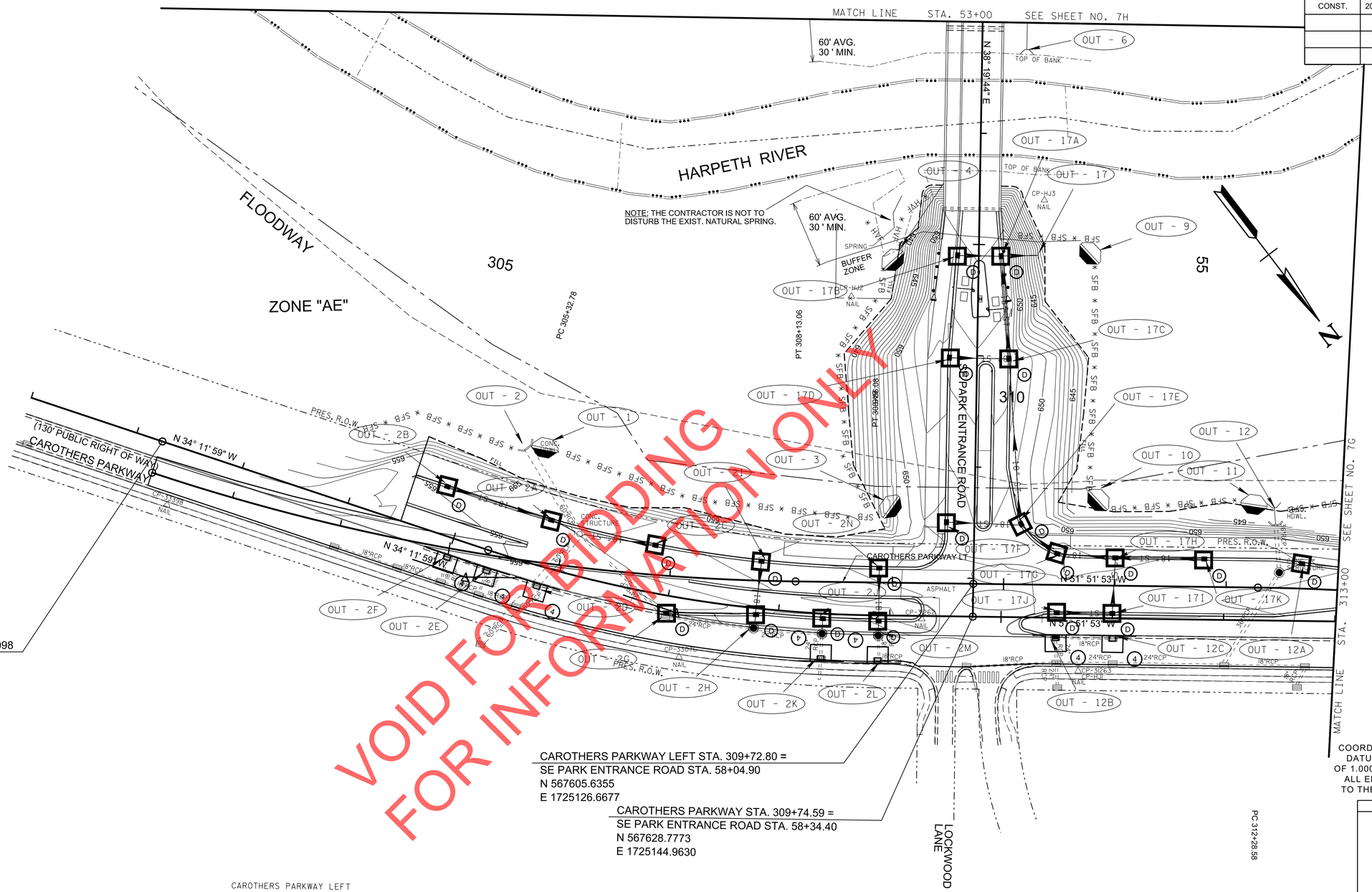

VOID FOR BIDDING
FOR INFORMATION ONLY

BEGIN PROJECT: COF #2019-0098
STA. 302+24.22
N 567061.6913
E 1725628.1532

CAROTHERS PARKWAY LEFT STA. 309+72.80 =
SE PARK ENTRANCE ROAD STA. 58+04.90
N 567605.6355
E 1725126.6677

CAROTHERS PARKWAY STA. 309+74.59 =
SE PARK ENTRANCE ROAD STA. 58+34.40
N 567628.7773
E 1725144.9630

COORDINATES ARE NAD 83(1983), ARE DATUM ADJUSTED BY THE FACTOR OF 1.000082257 AND TIED TO THE TGRN. ALL ELEVATIONS ARE REFERENCED TO THE NAVD 1988 WITH GEOID 2003.

CAROTHERS PARKWAY LEFT
CURVE SBC5
PI 305+20.99
N 567,323.7287
E 1,725,485.7423
Δ 17° 39′ 54″ (LT)
D 3° 00′ 00″
R 1,909.86
L 588.84
T 296.77

CAROTHERS PARKWAY
CURVE SBC2
PI 307+10.84
N 567,464.1650
E 1,725,354.6355
Δ 17° 39′ 54″ (LT)
D 5° 00′ 00″
R 1,145.92
L 353.30
T 178.06
SE 0.020 FT/FT
DESIGN SPEED 40 MPH
TRANS. LENGTH 150

CONTOUR LEGEND

—530— — EXISTING CONTOURS

——530—— PROPOSED CONTOURS

SEALED BY

BRIAN A. RALSTIN
REGISTERED ENGINEER
AGRICULTURE
COMMERCE
No. 119683
STATE OF TENNESSEE
9/18/2020

STAGE 2

HISTORIC FRANKLIN TENNESSEE

CITY OF FRANKLIN
ENGINEERING DEPARTMENT

EPSC LAYOUT

STA._53+00 TO STA._58+34.40
STA. 302+00 TO STA. 313+00
SCALE: 1"= 50'

9/21/2020 8:41:17 AM
Y:\Nashville\16019000S\16019033.00\Eng_Docs\Roadway\EPSC PHASE 2_001.sht

TYPE	YEAR	PROJECT NO.	SHEET NO.
CONST.	2020	COF# 2019-0098	7G

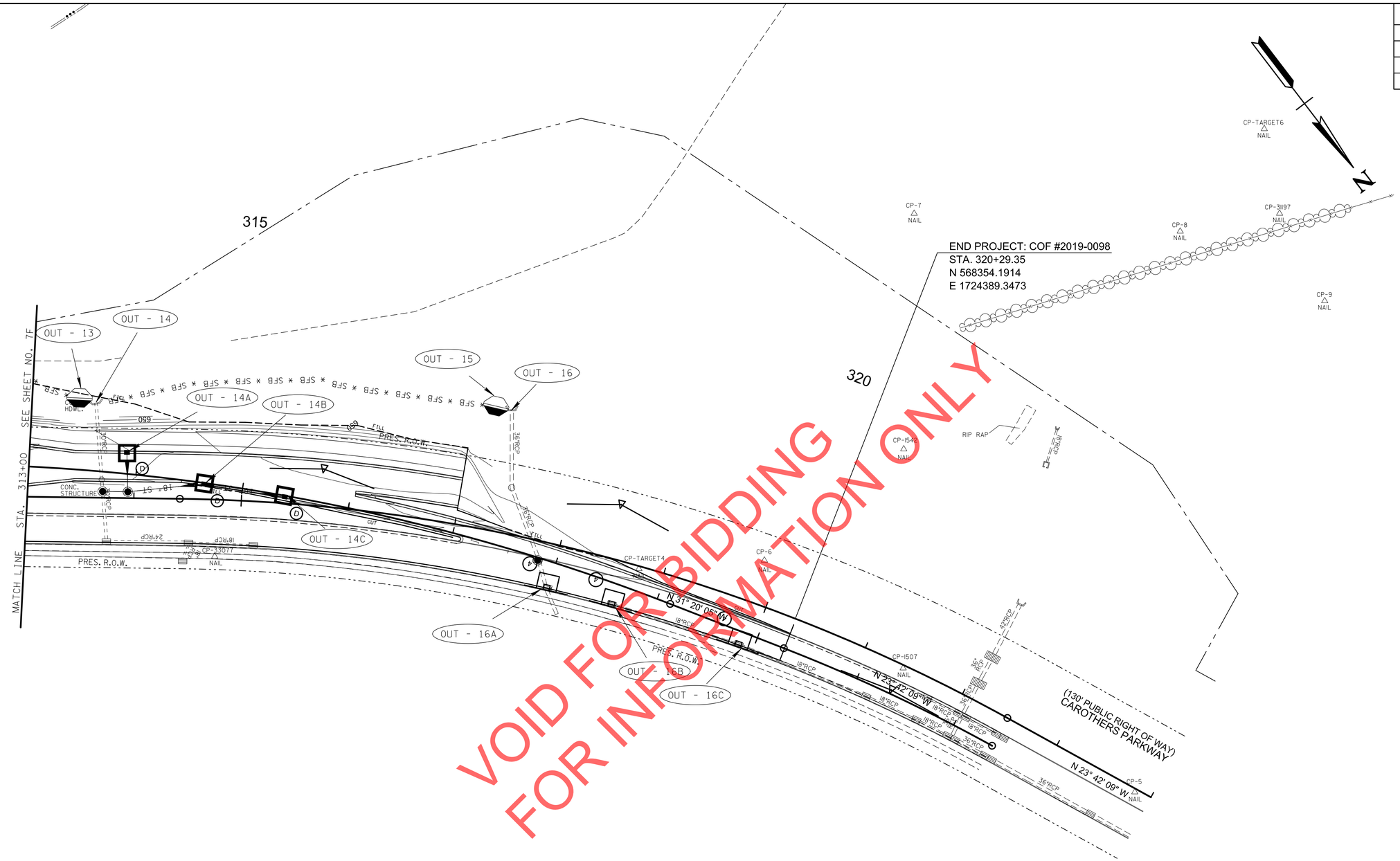

VOID FOR BIDDING
FOR INFORMATION ONLY

COORDINATES ARE NAD 83(1983), ARE DATUM ADJUSTED BY THE FACTOR OF 1.000082257 AND TIED TO THE TGRN. ALL ELEVATIONS ARE REFERENCED TO THE NAVD 1988 WITH GEOID 2003.

SEALED BY

BRIAN A. RALSTIN
REGISTERED ENGINEER
No. 119683
STATE OF TENNESSEE

9/18/2020

STAGE 2

CONTOUR LEGEND

—530— — EXISTING CONTOURS

——530—— PROPOSED CONTOURS

HISTORIC FRANKLIN TENNESSEE

CITY OF FRANKLIN
ENGINEERING DEPARTMENT

EPSC LAYOUT

STA. 313+00 TO STA. 323+00

SCALE: 1"= 50'

9/21/2020 8:41:19 AM
Y:\Nashville\16019000S\16019033.00\Eng_Docs\Roadway\EPSC PHASE 2_002.sht

TYPE	YEAR	PROJECT NO.	SHEET NO.
CONST.	2020	COF# 2019-0098	7H

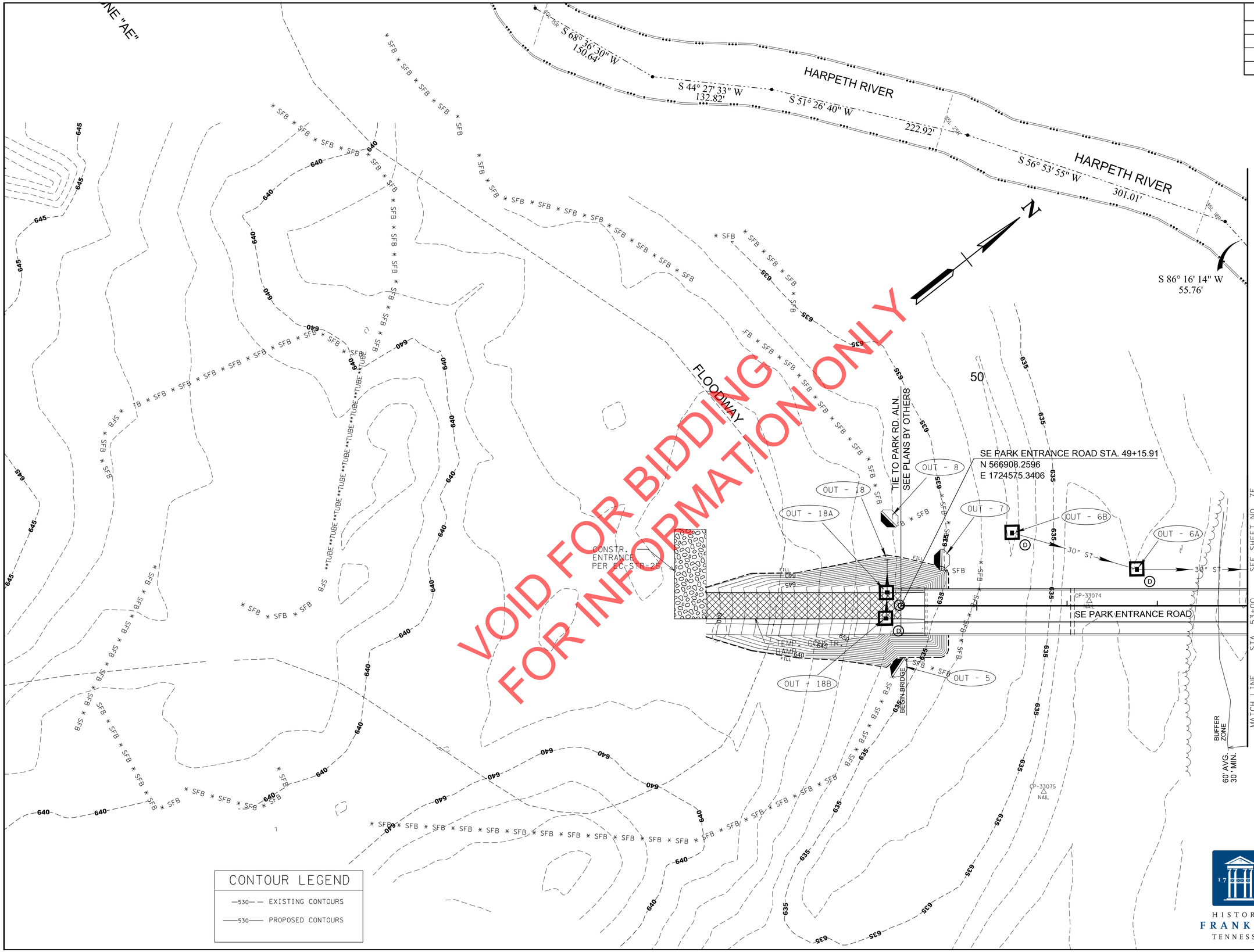

CONTOUR LEGEND

—530— EXISTING CONTOURS

—530— PROPOSED CONTOURS

COORDINATES ARE NAD 83(1983), ARE DATUM ADJUSTED BY THE FACTOR OF 1.000082257 AND TIED TO THE TGRN. ALL ELEVATIONS ARE REFERENCED TO THE NAVD 1988 WITH GEOID 2003.

SEALED BY

BRIAN A. RALSTIN
REGISTERED ENGINEER
No. 119683
STATE OF TENNESSEE
9/18/2020

STAGE 2

CITY OF FRANKLIN
ENGINEERING DEPARTMENT

HISTORIC FRANKLIN TENNESSEE

EPSC LAYOUT

STA.47+00 TO STA.53+00

SCALE: 1"= 50'

9/21/2020 8:41:21 AM
Y:\Nashville\16019000S\16019033.00\Eng_Docs\Roadway\EPSC PHASE 2_003.sht

TYPE	YEAR	PROJECT NO.	SHEET NO.
CONST.	2020	COF# 2019-0098	7J

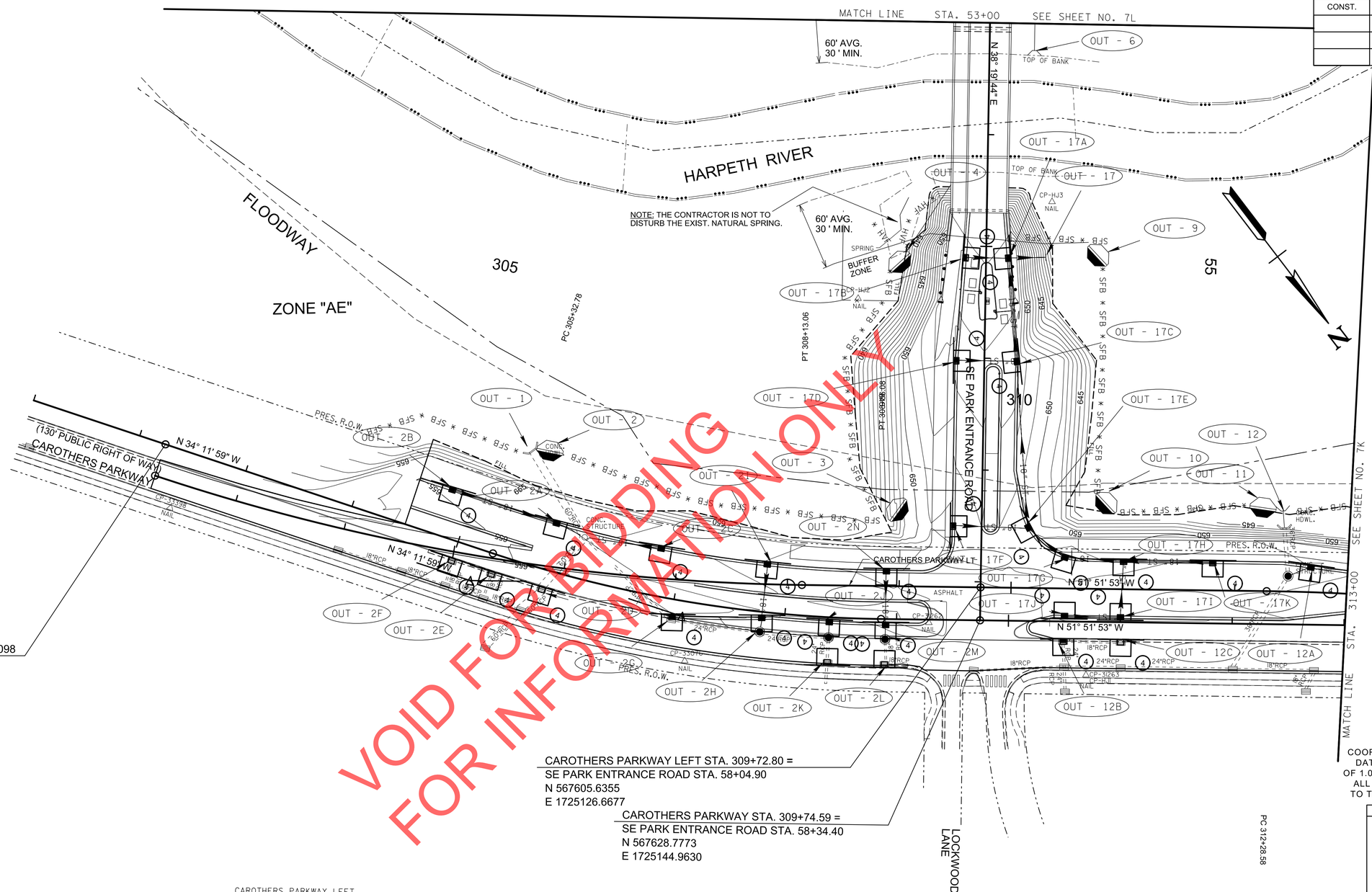

BEGIN PROJECT: COF #2019-0098
STA. 302+24.22
N 567061.6913
E 1725628.1532

CAROTHERS PARKWAY LEFT STA. 309+72.80 =
SE PARK ENTRANCE ROAD STA. 58+04.90
N 567605.6355
E 1725126.6677

CAROTHERS PARKWAY STA. 309+74.59 =
SE PARK ENTRANCE ROAD STA. 58+34.40
N 567628.7773
E 1725144.9630

VOID FOR BIDDING
FOR INFORMATION ONLY

COORDINATES ARE NAD 83(1983), ARE DATUM ADJUSTED BY THE FACTOR OF 1.000082257 AND TIED TO THE TGRN. ALL ELEVATIONS ARE REFERENCED TO THE NAVD 1988 WITH GEOID 2003.

CAROTHERS PARKWAY LEFT
CURVE SBC5
PI 305+20.99
N 567,323.7287
E 1,725,485.7423
Δ 17° 39′ 54″ (LT)
D 3° 00′ 00″
R 1,909.86
L 588.84
T 296.77

CAROTHERS PARKWAY
CURVE SBC2
PI 307+10.84
N 567,464.1650
E 1,725,354.6355
Δ 17° 39′ 54″ (LT)
D 5° 00′ 00″
R 1,145.92
L 353.30
T 178.06
SE 0.020 FT/FT
DESIGN SPEED 40 MPH
TRANS. LENGTH 150

CONTOUR LEGEND

—530— — EXISTING CONTOURS

——530—— PROPOSED CONTOURS

SEALED BY

BRIAN A. RALSTIN
REGISTERED ENGINEER
XVI
AGRICULTURE
COMMERCE
No. 119663
STATE OF TENNESSEE
9/18/2020

STAGE 3

HISTORIC FRANKLIN TENNESSEE

CITY OF FRANKLIN
ENGINEERING DEPARTMENT

EPSC LAYOUT

STA._53+00 TO STA._58+34.40
STA. 302+00 TO STA. 313+00
SCALE: 1"= 50'

9/21/2020 8:41:23 AM
Y:\Nashville\16019000S\16019033.00\Eng_Docs\Roadway\EPSC PHASE 3_001.sht

TYPE	YEAR	PROJECT NO.	SHEET NO.
CONST.	2020	COF# 2019-0098	7K

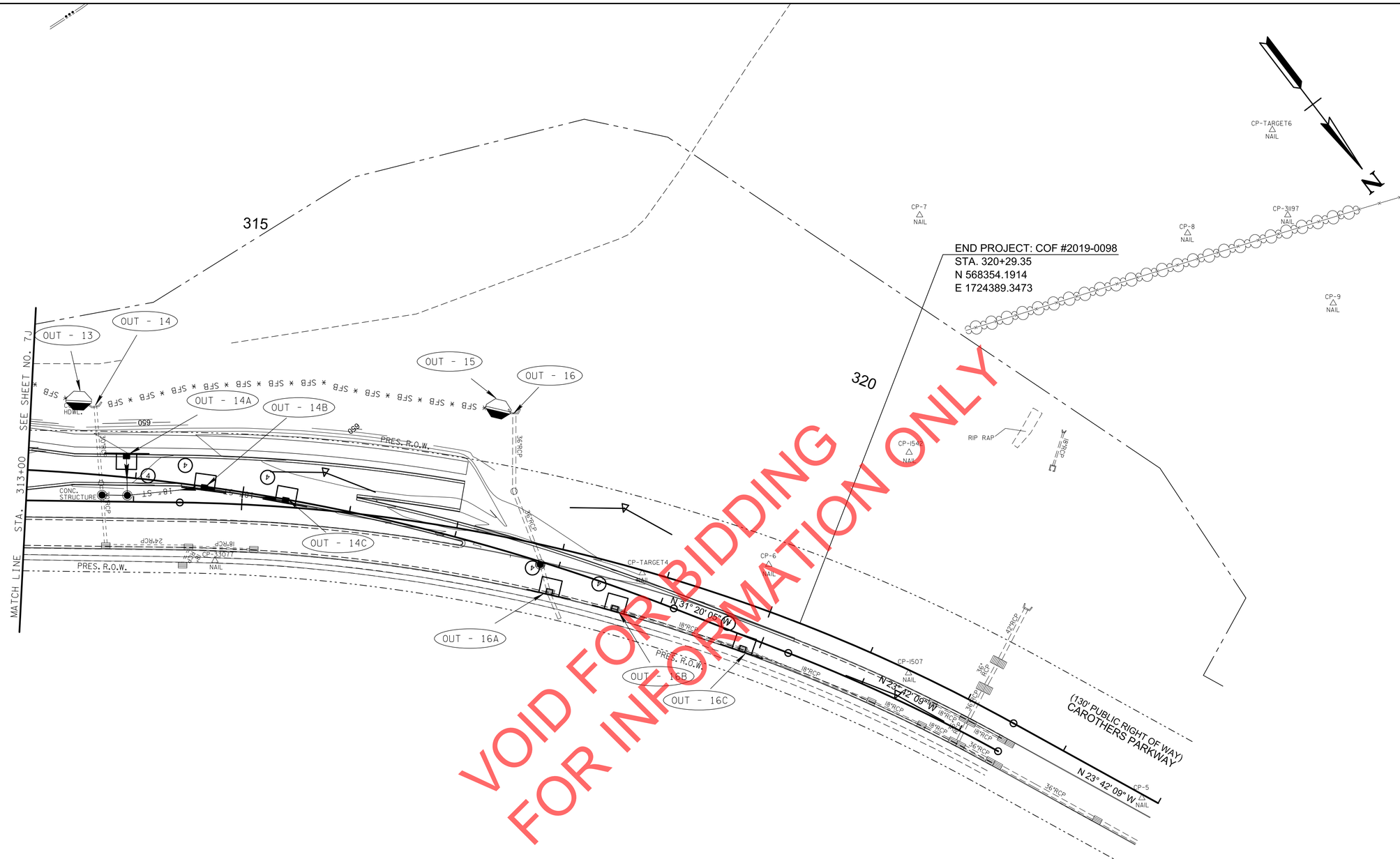

COORDINATES ARE NAD 83(1983), ARE DATUM ADJUSTED BY THE FACTOR OF 1.000082257 AND TIED TO THE TGRN. ALL ELEVATIONS ARE REFERENCED TO THE NAVD 1988 WITH GEOID 2003.

SEALED BY

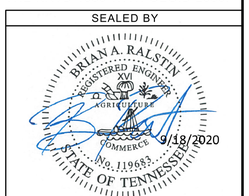

STAGE 3

CONTOUR LEGEND
—530— — EXISTING CONTOURS
——530—— PROPOSED CONTOURS

HISTORIC FRANKLIN TENNESSEE

CITY OF FRANKLIN
ENGINEERING DEPARTMENT

EPSC LAYOUT

STA. 313+00 TO STA. 323+00

SCALE: 1"= 50'

9/21/2020 8:41:25 AM
Y:\Nashville\16019000S\16019033.00\Eng_Docs\Roadway\EPSC PHASE 3_002.sht

TYPE	YEAR	PROJECT NO.	SHEET NO.
CONST.	2020	COF# 2019-0098	7L

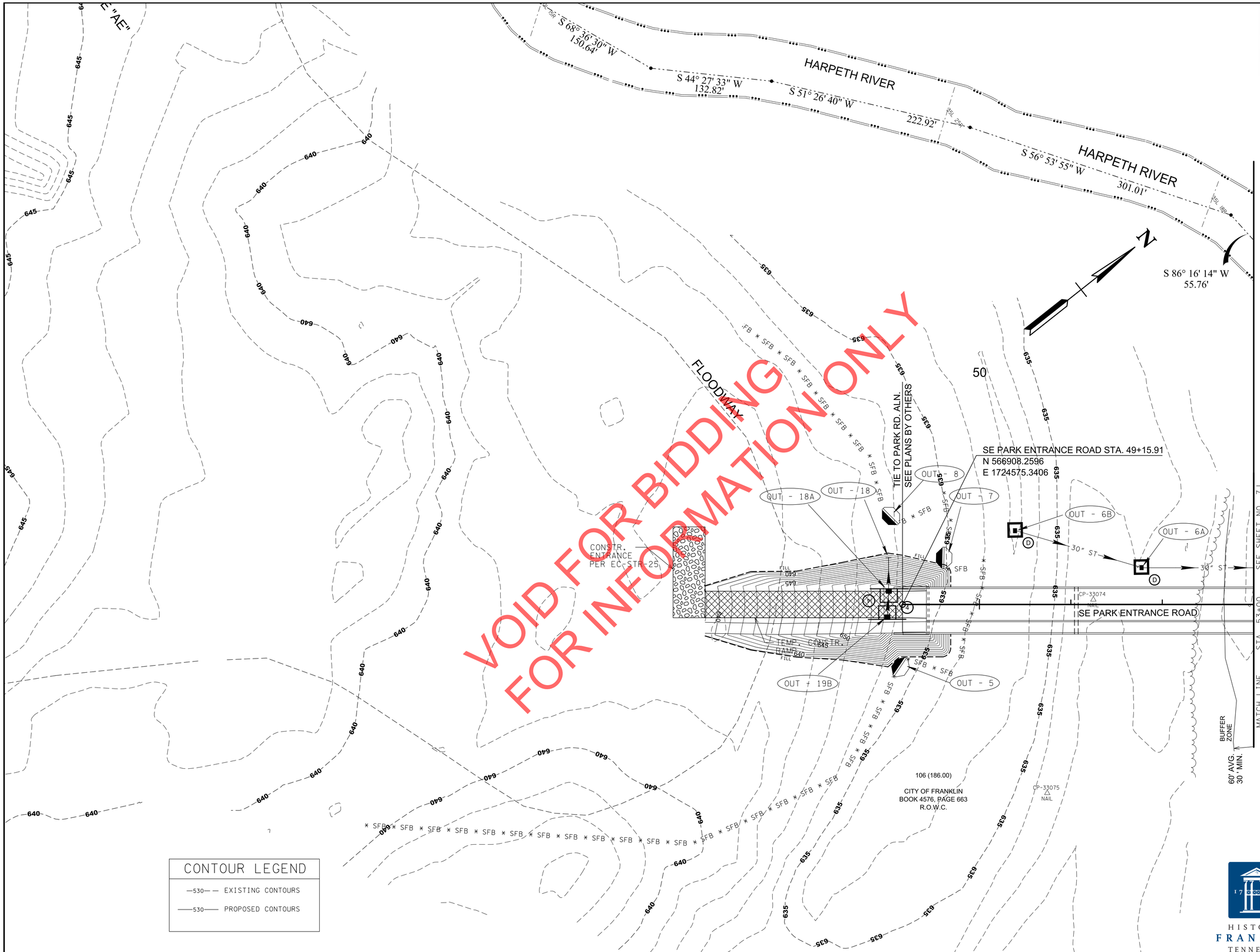

VOID FOR BIDDING
FOR INFORMATION ONLY

COORDINATES ARE NAD 83(1983), ARE DATUM ADJUSTED BY THE FACTOR OF 1.000082257 AND TIED TO THE TGRN. ALL ELEVATIONS ARE REFERENCED TO THE NAVD 1988 WITH GEOID 2003.

SEALED BY

BRIAN A. RALSTIN
REGISTERED ENGINEER
No. 119683
STATE OF TENNESSEE
9/18/2020

STAGE 3

CONTOUR LEGEND

—530— EXISTING CONTOURS

—530— PROPOSED CONTOURS

HISTORIC FRANKLIN TENNESSEE

CITY OF FRANKLIN
ENGINEERING DEPARTMENT

EPSC LAYOUT

STA.47+00 TO STA.53+00

SCALE: 1"= 50'

9/21/2020 8:41:27 AM
Y:\Washville\16019000S\16019033.00\Eng_Docs\Roadway\EPSC PHASE 3_003.sht

TYPE	YEAR	PROJECT NO.	SHEET NO.
CONST.	2020	COF# 2019-0098	8

PAVEMENT EDGE DROP-OFF TRAFFIC CONTROL NOTES

A. DIFFERENCES IN ELEVATION BETWEEN ADJACENT TRAFFIC LANES OR TRAFFIC LANE AND SHOULDER WHERE THE TRAFFIC LANE IS BEING USED BY TRAFFIC, CAUSED BY BASE, PAVING OR RESURFACING:

1. DIFFERENCES IN ELEVATION BETWEEN ADJACENT ROADWAY ELEMENTS GREATER THAN 0.75 INCH AND NOT EXCEEDING 1.75 INCHES:

   a. WARNING SIGNS, UNEVEN LANES (W8-11) AND/OR SHOULDER DROP-OFF WITH PLAQUE (W8-17 AND W8-17P), SHALL BE PLACED IN ADVANCE OF AND THROUGHOUT THE EXPOSED AREA. MAXIMUM SPACING BETWEEN SIGNS SHALL BE 2,000 FEET WITH A MINIMUM OF 2 SIGNS PER EXPOSED AREA. WHERE UNEVEN PAVEMENT IS ENCOUNTERED, SIGNS SHALL BE PLACED ON EACH SIDE OF THE ROADWAY.

   b. DIFFERENCES IN ELEVATION BETWEEN ADJACENT TRAFFIC LANES BEING UTILIZED BY TRAFFIC CAUSED BY ADDED PAVEMENT SHALL BE ELIMINATED WITHIN THREE WORKDAYS.

   c. DIFFERENCES IN ELEVATION BETWEEN ADJACENT TRAFFIC LANES BEING UTILIZED BY TRAFFIC CAUSED BY COLD PLANING SHALL BE ELIMINATED WITHIN THREE WORKDAYS.

   d. WHEN THE DIFFERENCE IN ELEVATION IS BETWEEN THE TRAFFIC LANE BEING UTILIZED BY TRAFFIC AND SHOULDER THE DIFFERENCE IN ELEVATION SHALL BE ELIMINATED WITHIN SEVEN WORKDAYS AFTER THE CONDITION IS CREATED.

2. DIFFERENCES IN ELEVATION BETWEEN ADJACENT ROADWAY ELEMENTS GREATER THAN 1.75 INCHES AND NOT EXCEEDING 6 INCHES, TRAFFIC IS NOT TO BE ALLOWED TO TRAVERSE THIS DIFFERENCE IN ELEVATION.

   a. SEPARATION SHALL BE ACCOMPLISHED BY DRUMS, BARRICADES OR OTHER APPROVED DEVICES IN ACCORDANCE WITH THE FOLLOWING:

      (1) WHERE POSTED SPEEDS ARE 50 MPH OR GREATER, SPACING OF THE PROTECTIVE DEVICES SHALL NOT EXCEED 100 FEET.

      (2) WHERE POSTED SPEEDS ARE LESS THAN 50 MPH, THE MAXIMUM SPACING OF THE PROTECTIVE DEVICES IN FEET SHALL NOT EXCEED TWICE THE POSTED SPEED IN MILES PER HOUR OR 50 FEET, WHICHEVER SPACING IS GREATER.

   b. IF THE DIFFERENCE IN ELEVATION IS ELIMINATED OR DECREASED TO 2 INCHES OR LESS BY THE END OF EACH WORKDAY, CONES MAY BE USED DURING DAYLIGHT HOURS IN LIEU OF DRUMS, BARRICADES OR OTHER APPROVED PROTECTIVE DEVICES MENTIONED IN PARAGRAPH a, PROVIDED WARNING SIGNS ARE ERECTED. WARNING SIGNS (UNEVEN LANES AND/OR SHOULDER DROP-OFF) SHALL BE PLACED IN ADVANCE OF AND THROUGHOUT THE EXPOSED AREA. MAXIMUM SPACING BETWEEN SIGNS SHALL BE 2,000 FEET WITH A MINIMUM OF 2 SIGNS PER EXPOSED AREA. WHERE UNEVEN PAVEMENT IS ENCOUNTERED, SIGNS SHALL BE PLACED ON EACH SIDE OF THE ROADWAY.

   c. WHEN THE DIFFERENCE IN ELEVATION IS BETWEEN THE THROUGH TRAFFIC LANE AND THE SHOULDER AND THE ELEVATION DIFFERENCE IS LESS THAN 3 INCHES, THE CONTRACTOR MAY USE WARNING SIGNS AND/OR PROTECTIVE DEVICES AS APPLICABLE AND APPROVED BY THE ENGINEER. SEE PARAGRAPH a REGARDING USE OF DRUMS, BARRICADES OR OTHER APPROVED PROTECTIVE DEVICES. WARNING SIGNS (UNEVEN LANES AND/OR SHOULDER DROP-OFF) WILL BE PLACED IN ADVANCE OF AND THROUGHOUT THE EXPOSED AREA. MAXIMUM SPACING BETWEEN SIGNS SHALL BE 2,000 FEET WITH A MINIMUM OF 2 SIGNS PER EXPOSED AREA. WHERE UNEVEN PAVEMENT IS ENCOUNTERED, SIGNS SHALL BE PLACED ON EACH SIDE OF THE ROADWAY.

IN THESE SITUATIONS, THE CONTRACTOR SHALL LIMIT HIS OPERATIONS TO ONE WORK ZONE NOT EXCEEDING 2 MILES IN LENGTH UNLESS OTHERWISE NOTED ON THE PLANS OR APPROVED BY THE ENGINEER. ONCE THE CONTRACTOR BEGINS WORK IN A WORK ZONE, A CONTINUOUS OPERATION SHALL BE MAINTAINED UNTIL THE DIFFERENCE IN ELEVATION IS ELIMINATED. SIMULTANEOUS WORK ON SEPARATE ROADWAYS OF DIVIDED HIGHWAYS WILL BE CONSIDERED INDEPENDENTLY IN REGARD TO RESTRICTION OF WORK ZONE ACTIVITY.

3. DIFFERENCES IN ELEVATION BETWEEN ADJACENT ROADWAY ELEMENTS GREATER THAN 6 INCHES BUT NOT EXCEEDING 18 INCHES, THE CONTRACTOR, WITH THE ENGINEER'S APPROVAL, MAY UTILIZE ONE OF THE FOLLOWING:

   a. THE CONTRACTOR SHALL ACCOMPLISH SEPARATION BY DRUMS, BARRICADES OR OTHER APPROVED DEVICES IN ACCORDANCE WITH THE FOLLOWING:

      (1) WHERE POSTED SPEEDS ARE 50 MPH OR GREATER, SPACING OF THE PROTECTIVE DEVICES SHALL NOT EXCEED 100 FEET.

      (2) WHERE POSTED SPEEDS ARE LESS THAN 50 MPH, THE MAXIMUM SPACING OF THE PROTECTIVE DEVICES IN FEET SHALL NOT EXCEED TWICE THE POSTED SPEED IN MILES PER HOUR OR 50 FEET, WHICHEVER SPACING IS GREATER.

   IN ORDER TO USE THIS METHOD, THE CONTRACTOR MUST REDUCE THE DIFFERENCE IN ELEVATION TO 6 INCHES OR LESS BY THE END OF THE WORKDAY THAT THE CONDITION IS CREATED.

   b. THE CONTRACTOR SHALL PROVIDE DRUMS, BARRICADES OR OTHER APPROVED SEPARATION DEVICES AS SPECIFIED IN PARAGRAPH a, AND CONSTRUCT A STONE WEDGE WITH A 4:1 SLOPE, OR FLATTER, TO ELIMINATE THE VERTICAL OFFSET IF THE LOWER ELEVATION IS AT OR BELOW SUBGRADE AT THE END OF EACH DAY.

   c. THE CONTRACTOR SHALL PROVIDE DRUMS, BARRICADES OR OTHER APPROVED SEPARATION DEVICES AS SPECIFIED IN PARAGRAPH a AND IF THE LOWER ELEVATION IS BASE STONE OR ASPHALT PAVEMENT, PLACEMENT OF SUBSEQUENT LAYERS OF PAVEMENT MUST BEGIN THE NEXT WORK DAY AND PROGRESS CONTINUOUSLY UNTIL THE DIFFERENCE IN ELEVATION IS ELIMINATED OR REDUCED TO SIX INCHES OR LESS.

   d. THE CONTRACTOR SHALL PROVIDE SEPARATION BY PORTABLE BARRIER RAIL.

   FOR PRECEDING CONDITIONS a, b, AND c, THE CONTRACTOR SHALL USE THE SHOULDER DROP-OFF WARNING SIGN WITH PLAQUE (W8-17 AND W8-17P). IT SHALL BE PLACED IN ADVANCE OF AND THROUGHOUT THE EXPOSED AREA. MAXIMUM SPACING BETWEEN THE SIGNS SHALL BE 2,000 FEET WITH A MINIMUM OF 2 SIGNS PER EXPOSED AREA. IN THESE SITUATIONS, THE CONTRACTOR SHALL LIMIT HIS OPERATIONS TO ONE WORK ZONE NOT EXCEEDING 1 MILE IN LENGTH UNLESS OTHERWISE NOTED ON THE PLANS OR APPROVED BY THE ENGINEER. ONCE THE CONTRACTOR BEGINS WORK IN A WORK ZONE, A CONTINUOUS OPERATION SHALL BE MAINTAINED UNTIL THE DIFFERENCE IS ELIMINATED. SIMULTANEOUS WORK ON SEPARATE ROADWAYS OF DIVIDED HIGHWAYS WILL BE CONSIDERED INDEPENDENTLY IN REGARD TO RESTRICTION OF WORK ZONE ACTIVITY.

4. FOR DIFFERENCES IN ELEVATION BETWEEN ADJACENT ROADWAY ELEMENTS GREATER THAN 18 INCHES.

   SEPARATION WILL BE PROVIDED BY USE OF PORTABLE BARRIER RAIL.

   IN THIS SITUATION THE CONTRACTOR SHALL LIMIT HIS OPERATIONS TO ONE WORK ZONE NOT EXCEEDING 1 MILE IN LENGTH UNLESS OTHERWISE NOTED ON THE PLANS OR APPROVED BY THE ENGINEER. ONCE THE CONTRACTOR BEGINS WORK IN A WORK ZONE, A CONTINUOUS OPERATION SHALL BE MAINTAINED UNTIL THE DIFFERENCE IN ELEVATION IS ELIMINATED. SIMULTANEOUS WORK ON SEPARATE ROADWAYS OF DIVIDED HIGHWAYS WILL BE CONSIDERED INDEPENDENTLY IN REGARD TO RESTRICTION OF WORK ZONE ACTIVITY.

B. IF THE DIFFERENCE IN ELEVATION IS WITHIN 30 FEET OF THE NEAREST TRAFFIC LANE BEING USED BY TRAFFIC CAUSED BY GRADING, EXCAVATION FOR UTILITIES, DRAINAGE STRUCTURES, UNDERCUTTING, ETC.:

1. IF THE DIFFERENCE IN ELEVATION IS WITHIN 8 FEET OF THE NEAREST TRAFFIC LANE WITH DIFFERENCE IN ELEVATION GREATER THAN 3/4 INCH AND NOT EXCEEDING 2 INCHES.

   a. WARNING SIGNS (UNEVEN LANES AND/OR SHOULDER DROP-OFF) SHALL BE PLACED IN ADVANCE OF AND THROUGHOUT THE EXPOSED AREA. MAXIMUM SPACING BETWEEN SIGNS SHALL BE 2,000 FEET WITH A MINIMUM OF 2 SIGNS PER EXPOSED AREA. WHERE UNEVEN PAVEMENT IS ENCOUNTERED, SIGNS SHALL BE PLACED ON EACH SIDE OF THE ROADWAY.

2. IF THE DIFFERENCE IN ELEVATION IS WITHIN 8 FEET OF THE NEAREST TRAFFIC LANE WITH DIFFERENCE IN ELEVATION GREATER THAN 2 INCHES AND NOT EXCEEDING 6 INCHES:

   a. SEPARATION SHALL BE ACCOMPLISHED BY DRUMS, BARRICADES OR OTHER APPROVED DEVICES IN ACCORDANCE WITH THE FOLLOWING:

      (1) WHERE POSTED SPEEDS ARE 50 MPH OR GREATER, SPACING OF THE PROTECTIVE DEVICES SHALL NOT EXCEED 100 FEET.

      (2) WHERE POSTED SPEEDS ARE LESS THAN 50 MPH THE MAXIMUM SPACING OF THE PROTECTIVE DEVICES IN FEET SHALL NOT EXCEED TWICE THE POSTED SPEED IN MILES PER HOUR OR 50 FEET, WHICHEVER SPACING IS GREATER.

3. IF THE DIFFERENCE IN ELEVATION IS WITHIN 8 FEET OF THE NEAREST TRAFFIC LANE WITH DIFFERENCE IN ELEVATION GREATER THAN 6 INCHES:

   a. SEPARATION SHALL BE ACCOMPLISHED BY DRUMS, BARRICADES OR OTHER APPROVED DEVICES IN ACCORDANCE WITH THE FOLLOWING:

      (1) WHERE POSTED SPEEDS ARE 50 MPH OR GREATER, SPACING OF THE PROTECTIVE DEVICES SHALL NOT EXCEED 100 FEET.

      (2) WHERE POSTED SPEEDS ARE LESS THAN 50 MPH THE MAXIMUM SPACING OF THE PROTECTIVE DEVICES IN FEET SHALL NOT EXCEED TWICE THE POSTED SPEED IN MILES PER HOUR OR 50 FEET, WHICHEVER SPACING IS GREATER.

   b. ELIMINATE VERTICAL OFFSET BY CONSTRUCTING A STONE WEDGE OR GRADING TO A 4:1 SLOPE, OR FLATTER, OR USE PORTABLE BARRIER RAIL.

   THE CONTRACTOR SHALL SCHEDULE THE WORK SO AS TO MINIMIZE THE TIME TRAFFIC IS EXPOSED TO AN ELEVATION DIFFERENCE. ONCE THE CONTRACTOR BEGINS AN ACTIVITY THAT CREATES AN ELEVATION DIFFERENCE WITHIN 8 FEET OF A TRAFFIC LANE, THE ACTIVITY SHALL BE PURSUED AS A CONTINUOUS OPERATION UNTIL THE ELEVATION DIFFERENCE IS ELIMINATED.

C. IF THE DIFFERENCE IN ELEVATION IS FARTHER THAN 8 FEET FROM THE NEAREST TRAFFIC LANE BUT NOT MORE THAN 30 FEET FROM THE NEAREST TRAFFIC LANE:

SEPARATION SHALL BE ACCOMPLISHED BY DRUMS, BARRICADES OR OTHER APPROVED DEVICES IN ACCORDANCE WITH THE FOLLOWING:

1. WHERE POSTED SPEEDS ARE 50 MPH OR GREATER, SPACING OF THE PROTECTIVE DEVICES SHALL NOT EXCEED 100 FEET.

2. WHERE POSTED SPEEDS ARE LESS THAN 50 MPH, THE MAXIMUM SPACING OF THE PROTECTIVE DEVICES IN FEET SHALL NOT EXCEED TWICE THE POSTED SPEED IN MILES PER HOUR OR 50 FEET, WHICHEVER SPACING IS GREATER.

THE CONTRACTOR SHALL SCHEDULE THE WORK SO AS TO MINIMIZE THE TIME TRAFFIC IS EXPOSED TO AN ELEVATION DIFFERENCE. ONCE THE CONTRACTOR BEGINS AN ACTIVITY THAT CREATES AN ELEVATION DIFFERENCE, THE ACTIVITY SHALL BE PURSUED AS A CONTINUOUS OPERATION UNTIL THE ELEVATION DIFFERENCE IS ELIMINATED.

VOID PRELIMINARY FOR INFORMATION ONLY

SEALED BY

BRIAN A. RALSTIN
REGISTERED ENGINEER
No. 120
AGRICULTURE
COMMERCE
No. 119683
STATE OF TENNESSEE
9/18/2020

HISTORIC FRANKLIN TENNESSEE

CITY OF FRANKLIN
ENGINEERING DEPARTMENT

PAVEMENT EDGE DROP-OFF NOTES FOR TRAFFIC CONTROL

9/21/2020 8:41:29 AM
Y:\nashville\16019000S\16019033.00\Eng_Docs\Roadway\TRAFFIC CONTROL_000.sht

TYPE	YEAR	PROJECT NO.	SHEET NO.
CONST.	2020	COF# 2019-0098	8A

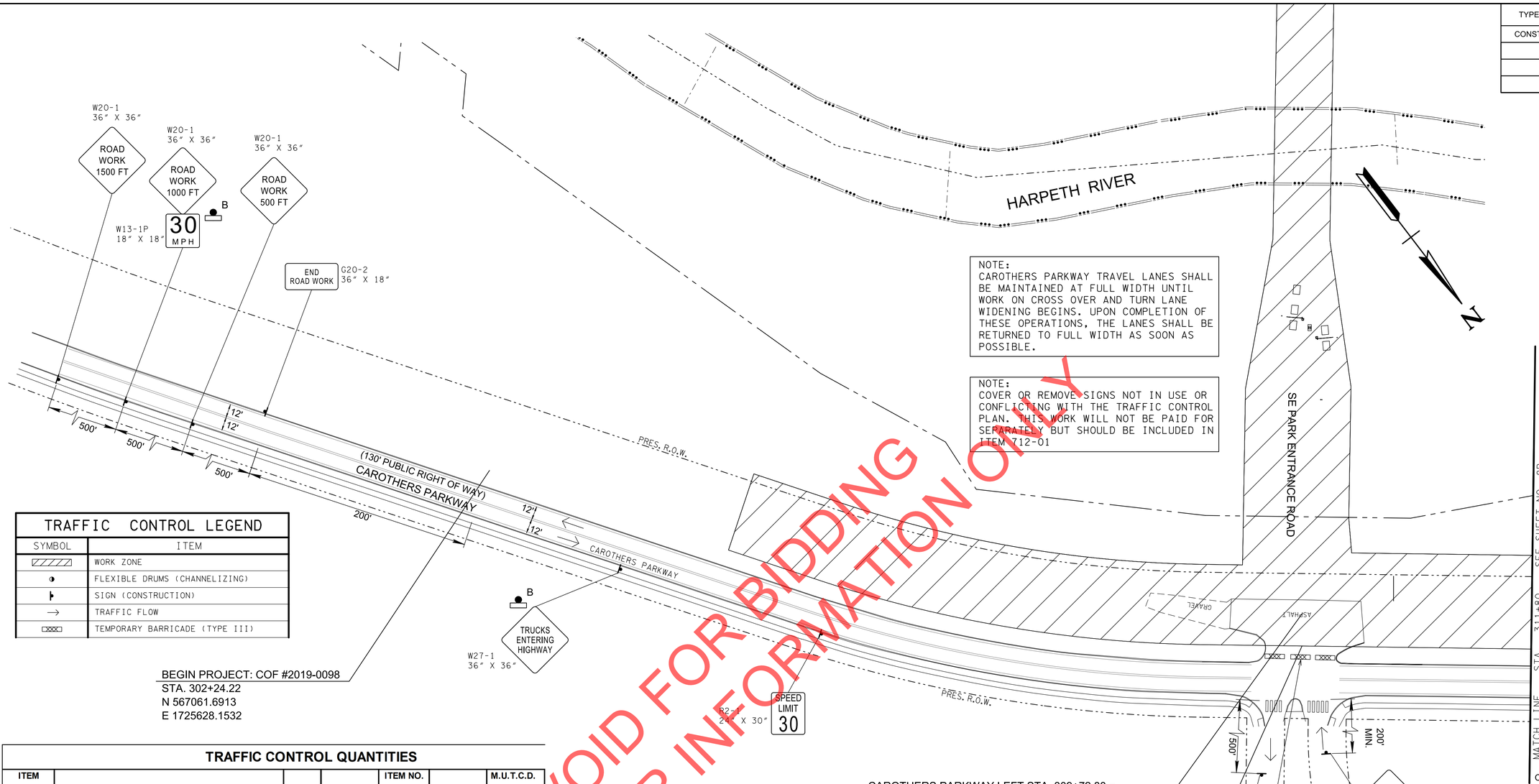

TRAFFIC CONTROL LEGEND

SYMBOL	ITEM
	WORK ZONE
	FLEXIBLE DRUMS (CHANNELIZING)
	SIGN (CONSTRUCTION)
→	TRAFFIC FLOW
	TEMPORARY BARRICADE (TYPE III)

BEGIN PROJECT: COF #2019-0098
STA. 302+24.22
N 567061.6913
E 1725628.1532

CAROTHERS PARKWAY LEFT STA. 309+72.80 =
SE PARK ENTRANCE ROAD STA. 58+04.90
N 567605.6355
E 1725126.6677

CAROTHERS PARKWAY STA. 309+74.59 =
SE PARK ENTRANCE ROAD STA. 58+34.40
N 567628.7773
E 1725144.9630

MARKING ABBREVIATIONS

SSWL - SINGLE SOLID WHITE LINE
SSYL - SINGLE SOLID YELLOW LINE
DSYL - DOUBLE SOLID YELLOW LINE

NOTE:
SEE T.D.O.T. STANDARD DRAWINGS FOR PAVEMENT MARKING DETAILS NOT SHOWN ON PLANS

APPROXIMATELY 72' OF TYPE III BARRICADE AT MEDIAN OPENING

TYPE III BARRICADE ROAD CLOSURE w/ TYPE A WARNING LIGHTS

TRAFFIC CONTROL QUANTITIES

ITEM NO.	DESCRIPTION	UNIT	QUANTITY	ITEM NO. 712-06 (S.F.)	SIZE	M.U.T.C.D. NO.
712-01	TRAFFIC CONTROL	LS	1			
712-04.01	FLEXIBLE DRUMS (CHANNELIZATION)	EA	150			
712-05.01	WARNING LIGHTS (TYPE A)	EA	4			
712-05.02	WARNING LIGHTS (TYPE B)	EA	4			
712-06	SIGNS (CONSTRUCTION)	SF	165.5			
712-07.03	TEMPORARY BARRICADES (TYPE III)	LF	156			
716-05.01	PAINTED PAVEMENT MARKING (4IN LINE)	LM	3.04			
716-05.02	PAINTED PAVEMENT MARKING (8IN BARRIER LINE)	LF	350			
712-06	END ROADWORK	SF	3	13.50	36" X 18"	G20-2
712-06	SPEED LIMIT 30	SF	2	10.00	24" X 30"	R2-1
712-06	ROAD CLOSED	SF	1	10.00	48" X 30"	R11-2
712-06	LANE SHIFT AHEAD	SF	2	18.00	36" X 36"	W1-4
712-06	ROAD NARROWS	SF	2	18.00	36" X 36"	W5-1
712-06	DIVIDED HIGHWAY	SF	1	9.00	36" X 36"	W6-2
712-06	30 MPH (PLAQUE)	SF	2	6.00	18" X 18"	W13-1P
712-06	ROAD WORK 1500 FT	SF	2	18.00	36" X 36"	W20-1
712-06	ROAD WORK 1000 FT	SF	2	18.00	36" X 36"	W20-1
712-06	ROAD WORK 500 FT	SF	2	18.00	36" X 36"	W20-1
712-06	ROAD WORK AHEAD	SF	1	9.00	36" X 36"	W20-1
712-06	TRUCKS ENTERING HIGHWAY	SF	2	18.00	36" X 36"	W27-1
TOTAL				**165.50**		

VOID FOR BIDDING
FOR INFORMATION ONLY

COORDINATES ARE NAD 83(1983), ARE DATUM ADJUSTED BY THE FACTOR OF 1.000082257 AND TIED TO THE TGRN. ALL ELEVATIONS ARE REFERENCED TO THE NAVD 1988 WITH GEOID 2003.

SEALED BY

BRIAN A. RALSTIN
REGISTERED ENGINEER
No. 119683
STATE OF TENNESSEE
9/18/2020

HISTORIC FRANKLIN TENNESSEE

CITY OF FRANKLIN ENGINEERING DEPARTMENT

TRAFFIC CONTROL (PHASE 1)

STA. 298+00 TO STA. 311+80

SCALE: 1"= 50'

9/21/2020 8:41:44 AM
Y:\nashville\16019000S\16019033.00\Eng_Docs\Roadway\TRAFFIC CONTROL_001.sht

TYPE	YEAR	PROJECT NO.	SHEET NO.
CONST.	2020	COF# 2019-0098	8B

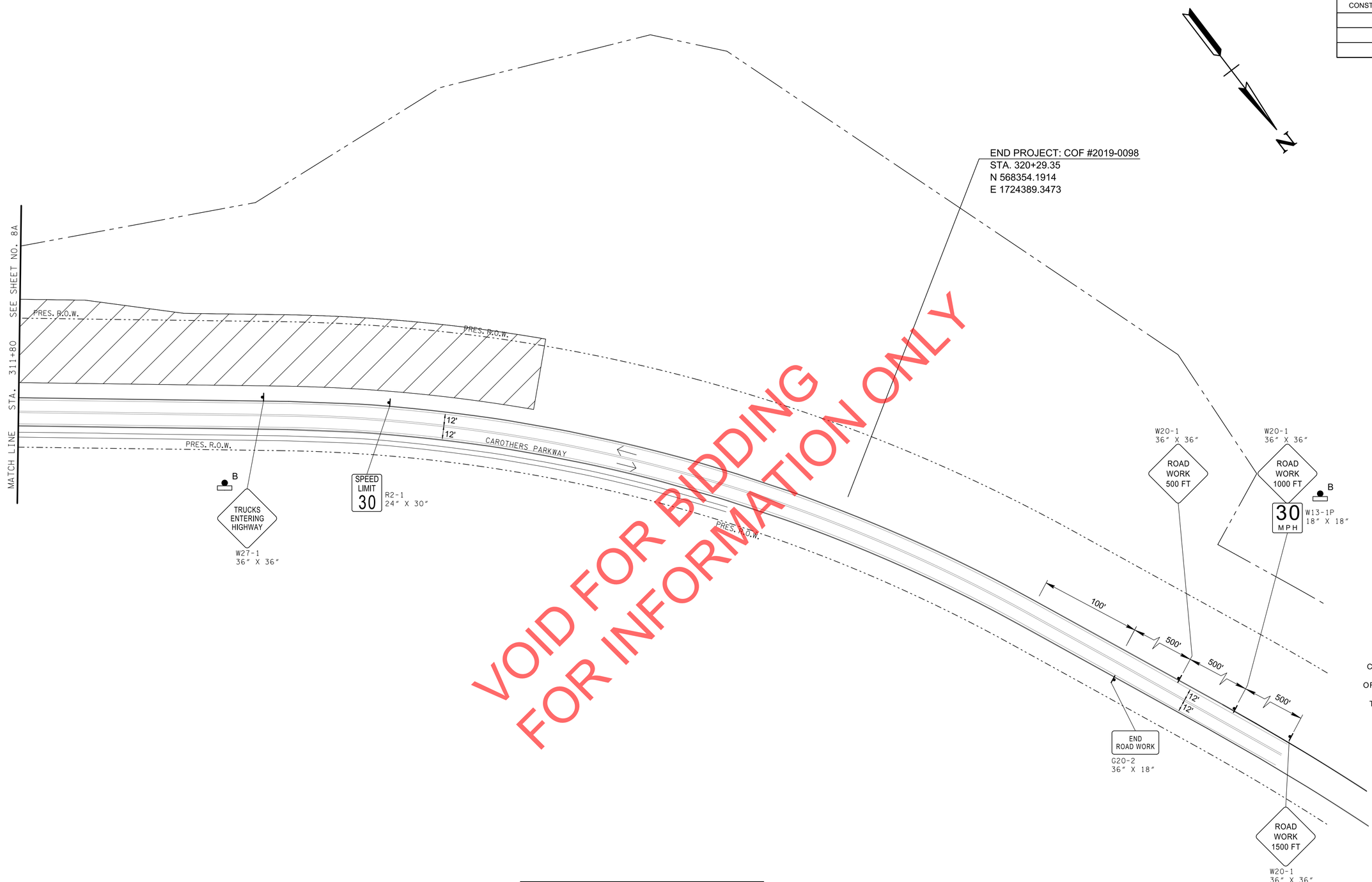

VOID FOR BIDDING
FOR INFORMATION ONLY

COORDINATES ARE NAD 83(1983), ARE DATUM ADJUSTED BY THE FACTOR OF 1.000082257 AND TIED TO THE TGRN. ALL ELEVATIONS ARE REFERENCED TO THE NAVD 1988 WITH GEOID 2003.

SEALED BY

BRIAN A. RALSTIN
REGISTERED ENGINEER
XVI
AGRICULTURE
COMMERCE
No. 119683
STATE OF TENNESSEE
9/18/2020

TRAFFIC CONTROL LEGEND

SYMBOL	ITEM
	WORK ZONE
	FLEXIBLE DRUMS (CHANNELIZING)
	SIGN (CONSTRUCTION)
→	TRAFFIC FLOW
	TEMPORARY BARRICADE (TYPE III)

NOTE:
COVER OR REMOVE SIGNS NOT IN USE OR CONFLICTING WITH THE TRAFFIC CONTROL PLAN. THIS WORK WILL NOT BE PAID FOR SEPARATELY BUT SHOULD BE INCLUDED IN ITEM 712-01

MARKING ABBREVIATIONS

SSWL - SINGLE SOLID WHITE LINE
SSYL - SINGLE SOLID YELLOW LINE
DSYL - DOUBLE SOLID YELLOW LINE

NOTE:
SEE T.D.O.T. STANDARD DRAWINGS FOR PAVEMENT MARKING DETAILS NOT SHOWN ON PLANS

HISTORIC FRANKLIN TENNESSEE

CITY OF FRANKLIN
ENGINEERING DEPARTMENT

TRAFFIC CONTROL (PHASE 1)

STA. 311+80 TO STA. 325+70

SCALE: 1"= 50'

9/21/2020 8:41:48 AM
Y:\Nashville\16019000S\16019033.00\Eng_Docs\Roadway\TRAFFIC CONTROL_002.sht

TYPE	YEAR	PROJECT NO.	SHEET NO.
CONST.	2020	COF# 2019-0098	8C

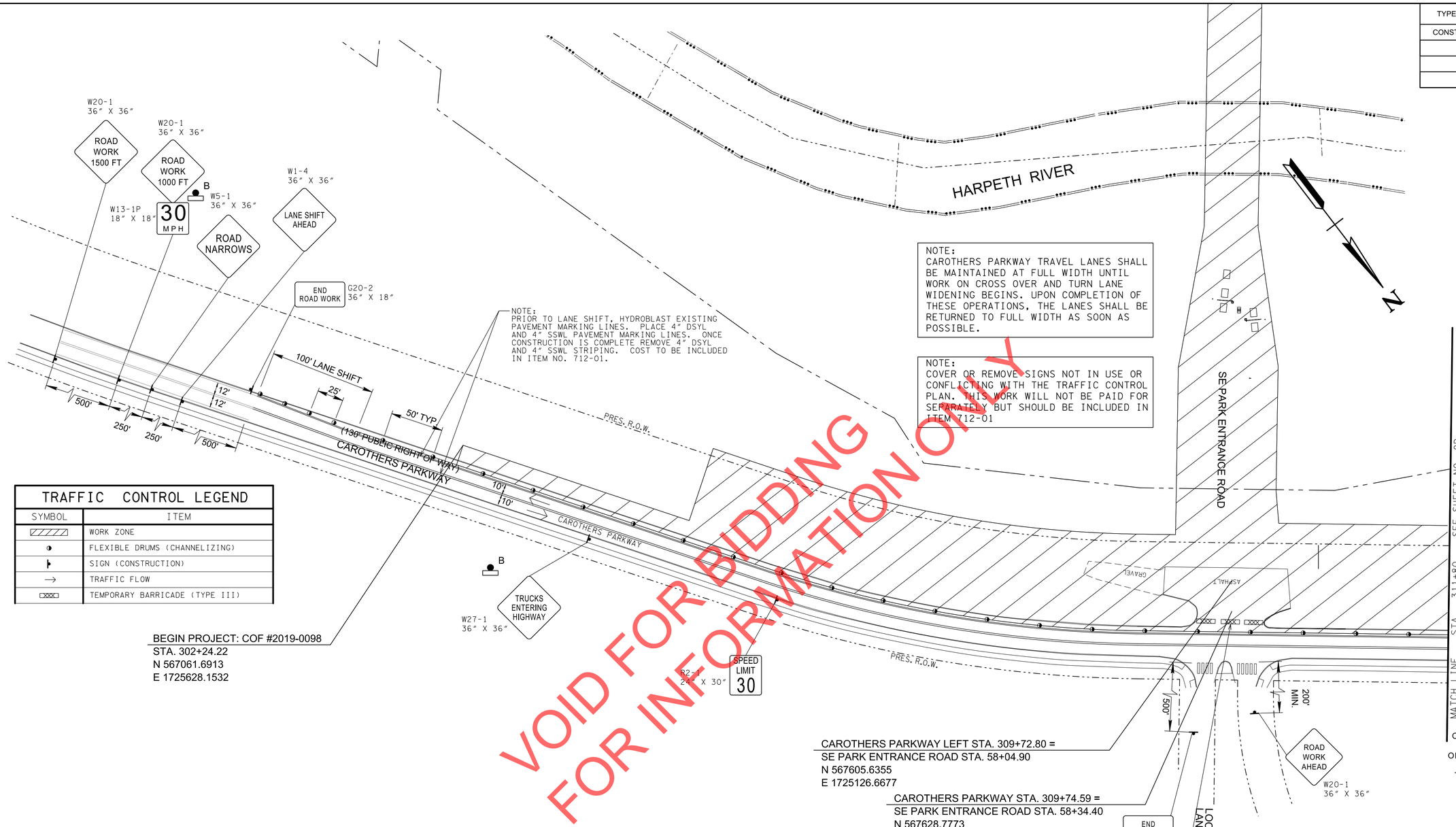

BEGIN PROJECT: COF #2019-0098
STA. 302+24.22
N 567061.6913
E 1725628.1532

CAROTHERS PARKWAY LEFT STA. 309+72.80 =
SE PARK ENTRANCE ROAD STA. 58+04.90
N 567605.6355
E 1725126.6677

CAROTHERS PARKWAY STA. 309+74.59 =
SE PARK ENTRANCE ROAD STA. 58+34.40
N 567628.7773
E 1725144.9630

APPROXIMATELY 72' OF TYPE III BARRICADE AT MEDIAN OPENING

VOID FOR BIDDING
FOR INFORMATION ONLY

TRAFFIC CONTROL LEGEND

SYMBOL	ITEM
	WORK ZONE
	FLEXIBLE DRUMS (CHANNELIZING)
	SIGN (CONSTRUCTION)
→	TRAFFIC FLOW
	TEMPORARY BARRICADE (TYPE III)

MARKING ABBREVIATIONS

SSWL - SINGLE SOLID WHITE LINE
SSYL - SINGLE SOLID YELLOW LINE
DSYL - DOUBLE SOLID YELLOW LINE

NOTE:
SEE T.D.O.T. STANDARD DRAWINGS FOR PAVEMENT MARKING DETAILS NOT SHOWN ON PLANS

TYPE III BARRICADE ROAD CLOSURE
w/ TYPE A
WARNING LIGHTS

COORDINATES ARE NAD 83(1983), ARE DATUM ADJUSTED BY THE FACTOR OF 1.000082257 AND TIED TO THE TGRN. ALL ELEVATIONS ARE REFERENCED TO THE NAVD 1988 WITH GEOID 2003.

SEALED BY

BRIAN A. RALSTIN
REGISTERED ENGINEER
XVI
AGRICULTURE
COMMERCE
No. 119683
STATE OF TENNESSEE
9/18/2020

HISTORIC FRANKLIN TENNESSEE

CITY OF FRANKLIN
ENGINEERING DEPARTMENT

TRAFFIC CONTROL (PHASE 2)

STA. 298+00 TO STA. 311+80

SCALE: 1"= 50'

9/21/2020 8:41:50 AM
Y:\Washville\16019000S\16019033.00\Eng_Docs\Roadway\TRAFFIC CONTROL_004.sht

TYPE	YEAR	PROJECT NO.	SHEET NO.
CONST.	2020	COF# 2019-0098	8D

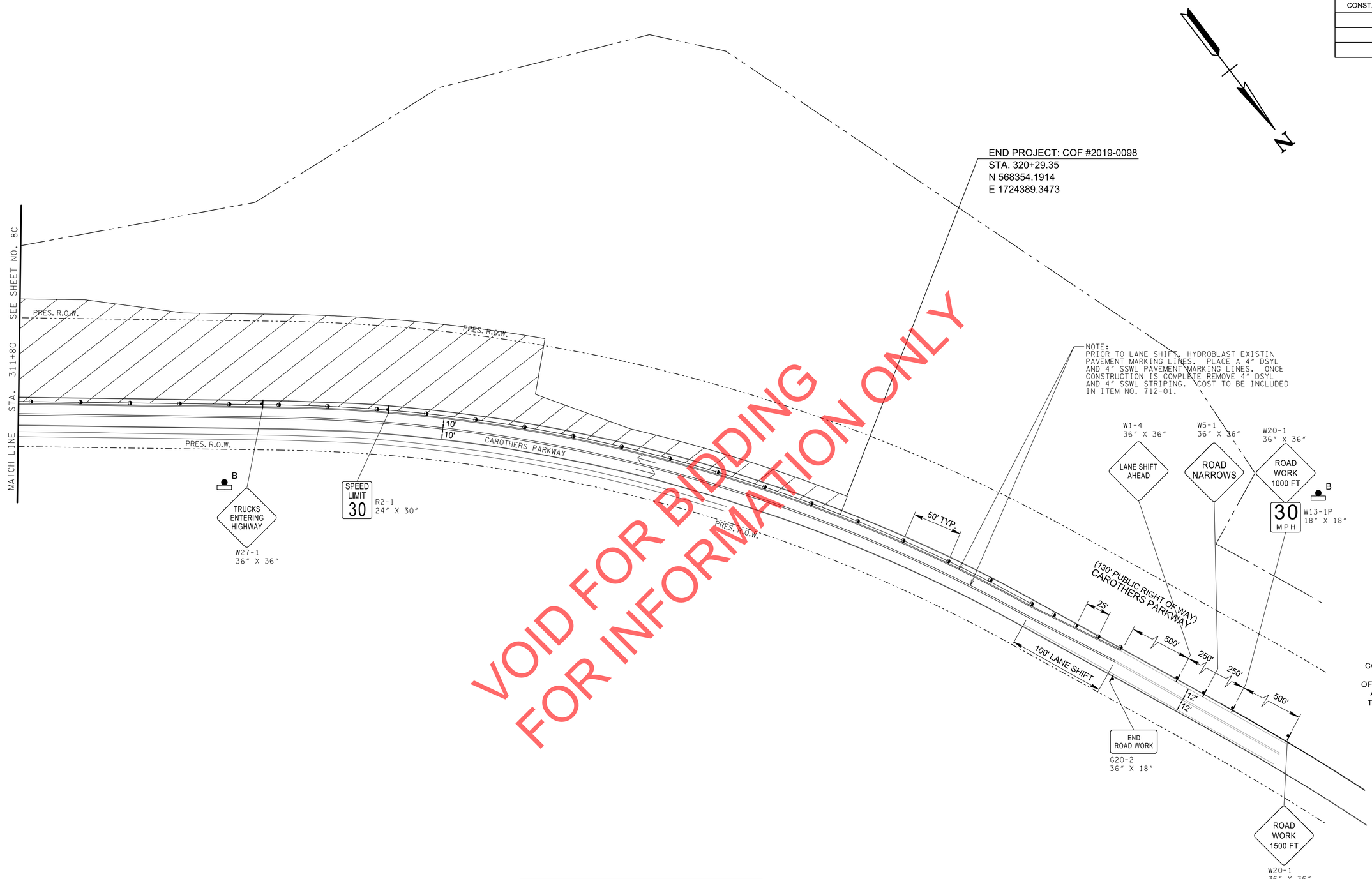

VOID FOR BIDDING
FOR INFORMATION ONLY

COORDINATES ARE NAD 83(1983), ARE DATUM ADJUSTED BY THE FACTOR OF 1.000082257 AND TIED TO THE TGRN. ALL ELEVATIONS ARE REFERENCED TO THE NAVD 1988 WITH GEOID 2003.

SEALED BY

BRIAN A. RALSTIN
REGISTERED ENGINEER
AGRICULTURE COMMERCE
No. 119683
STATE OF TENNESSEE
9/18/2020

TRAFFIC CONTROL LEGEND	
SYMBOL	ITEM
	WORK ZONE
	FLEXIBLE DRUMS (CHANNELIZING)
	SIGN (CONSTRUCTION)
→	TRAFFIC FLOW
	TEMPORARY BARRICADE (TYPE III)

NOTE:
COVER OR REMOVE SIGNS NOT IN USE OR CONFLICTING WITH THE TRAFFIC CONTROL PLAN. THIS WORK WILL NOT BE PAID FOR SEPARATELY BUT SHOULD BE INCLUDED IN ITEM 712-01

MARKING ABBREVIATIONS

SSWL - SINGLE SOLID WHITE LINE
SSYL - SINGLE SOLID YELLOW LINE
DSYL - DOUBLE SOLID YELLOW LINE

NOTE:
SEE T.D.O.T. STANDARD DRAWINGS FOR PAVEMENT MARKING DETAILS NOT SHOWN ON PLANS

HISTORIC FRANKLIN TENNESSEE

CITY OF FRANKLIN
ENGINEERING DEPARTMENT

TRAFFIC CONTROL (PHASE 2)

STA. 311+80 TO STA. 325+70

SCALE: 1"= 50'

9/21/2020 8:41:51 AM
Y:\Nashville\16019000S\16019033.00\Eng_Docs\Roadway\TRAFFIC CONTROL_004B.sht

TYPE	YEAR	PROJECT NO.	SHEET NO.
CONST.	2020	COF# 2019-0098	8E

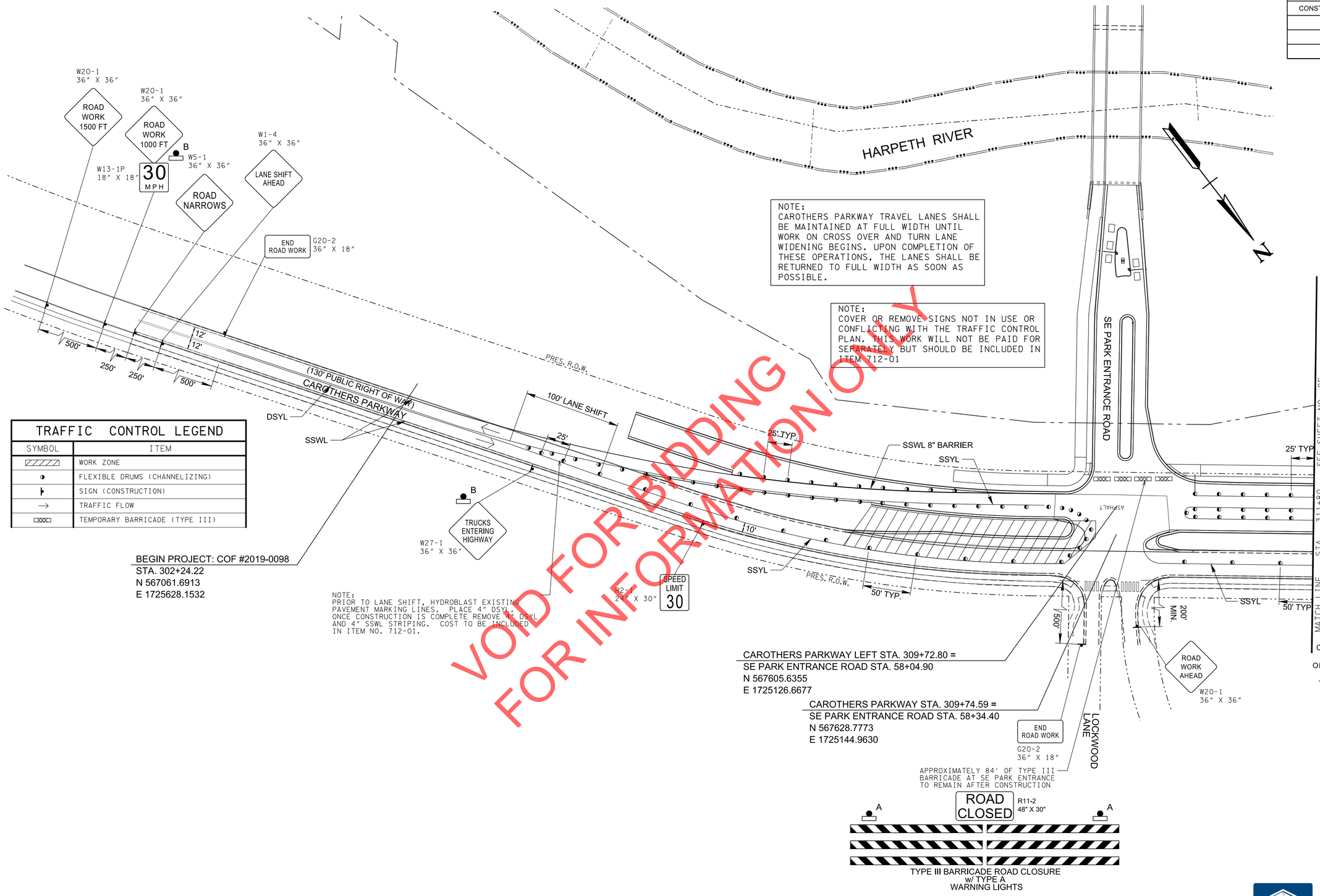

TRAFFIC CONTROL LEGEND

SYMBOL	ITEM
	WORK ZONE
	FLEXIBLE DRUMS (CHANNELIZING)
	SIGN (CONSTRUCTION)
→	TRAFFIC FLOW
	TEMPORARY BARRICADE (TYPE III)

BEGIN PROJECT: COF #2019-0098
STA. 302+24.22
N 567061.6913
E 1725628.1532

NOTE:
PRIOR TO LANE SHIFT, HYDROBLAST EXISTING PAVEMENT MARKING LINES. PLACE 4" DSYL, ONCE CONSTRUCTION IS COMPLETE REMOVE 4" DSYL AND 4" SSWL STRIPING. COST TO BE INCLUDED IN ITEM NO. 712-01.

CAROTHERS PARKWAY LEFT STA. 309+72.80 =
SE PARK ENTRANCE ROAD STA. 58+04.90
N 567605.6355
E 1725126.6677

CAROTHERS PARKWAY STA. 309+74.59 =
SE PARK ENTRANCE ROAD STA. 58+34.40
N 567628.7773
E 1725144.9630

APPROXIMATELY 84' OF TYPE III BARRICADE AT SE PARK ENTRANCE TO REMAIN AFTER CONSTRUCTION

TYPE III BARRICADE ROAD CLOSURE w/ TYPE A WARNING LIGHTS

COORDINATES ARE NAD 83(1983), ARE DATUM ADJUSTED BY THE FACTOR OF 1.000082257 AND TIED TO THE TGRN. ALL ELEVATIONS ARE REFERENCED TO THE NAVD 1988 WITH GEOID 2003.

SEALED BY

BRIAN A. RALSTIN
REGISTERED ENGINEER
XVI
AGRICULTURE
COMMERCE
No. 119683
STATE OF TENNESSEE
9/18/2020

MARKING ABBREVIATIONS

SSWL - SINGLE SOLID WHITE LINE
SSYL - SINGLE SOLID YELLOW LINE
DSYL - DOUBLE SOLID YELLOW LINE

NOTE:
SEE T.D.O.T. STANDARD DRAWINGS FOR PAVEMENT MARKING DETAILS NOT SHOWN ON PLANS

HISTORIC FRANKLIN TENNESSEE

CITY OF FRANKLIN
ENGINEERING DEPARTMENT

TRAFFIC CONTROL (PHASE 3)

STA. 298+00 TO STA. 311+80

SCALE: 1"= 50'

VOID FOR BIDDING
FOR INFORMATION ONLY

9/21/2020 8:41:54 AM
Y:\Washville\16019000S\16019033.00\Eng_Docs\Roadway\TRAFFIC CONTROL_005.sht

TYPE	YEAR	PROJECT NO.	SHEET NO.
CONST.	2020	COF# 2019-0098	8F

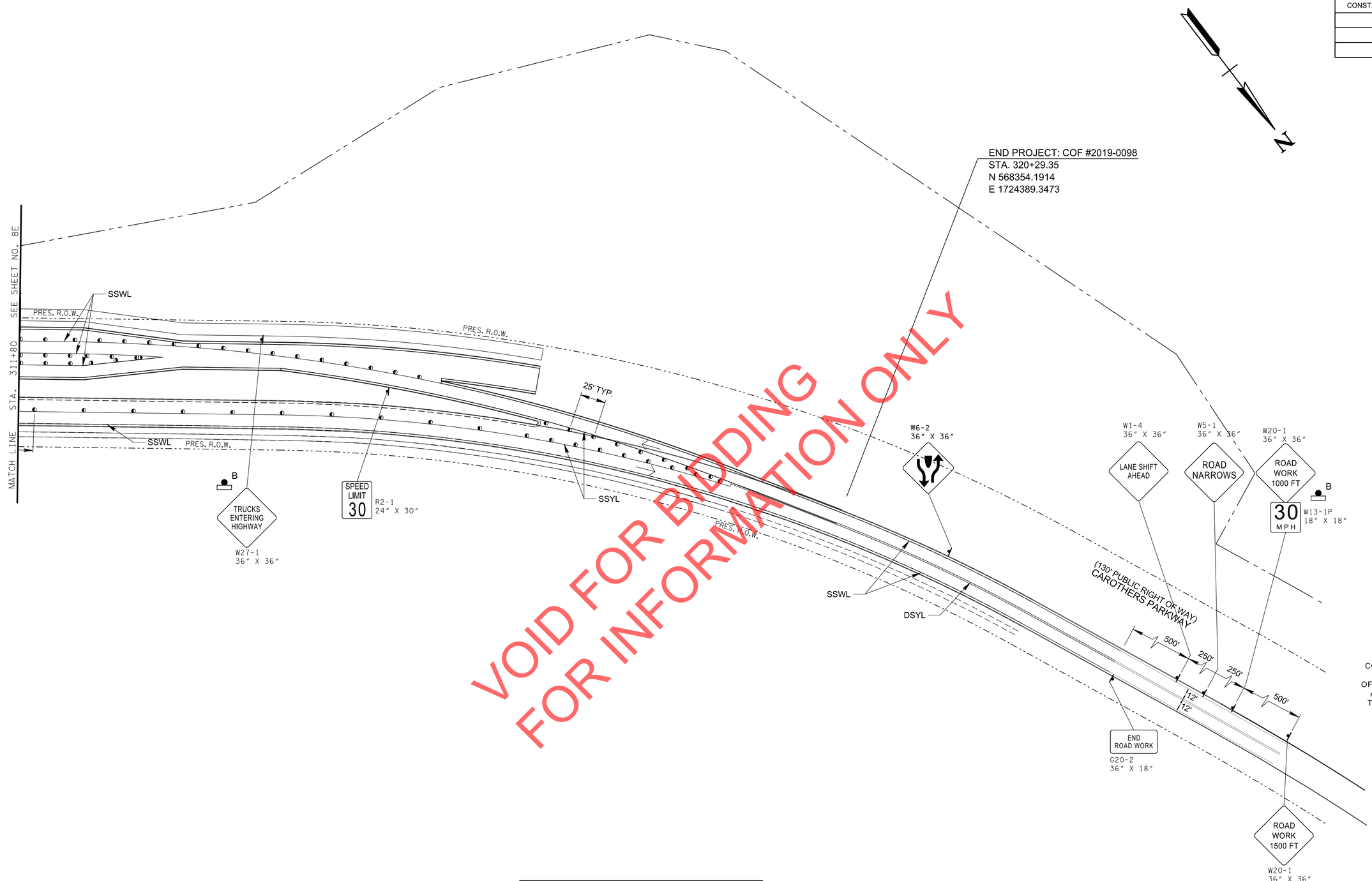

VOID FOR BIDDING
FOR INFORMATION ONLY

COORDINATES ARE NAD 83(1983), ARE DATUM ADJUSTED BY THE FACTOR OF 1.000082257 AND TIED TO THE TGRN. ALL ELEVATIONS ARE REFERENCED TO THE NAVD 1988 WITH GEOID 2003.

SEALED BY

BRIAN A. RALSTIN
REGISTERED ENGINEER
XVI
AGRICULTURE
COMMERCE
No. 119683
STATE OF TENNESSEE

9/18/2020

TRAFFIC CONTROL LEGEND

SYMBOL	ITEM
	WORK ZONE
	FLEXIBLE DRUMS (CHANNELIZING)
	SIGN (CONSTRUCTION)
→	TRAFFIC FLOW
	TEMPORARY BARRICADE (TYPE III)

NOTE:
COVER OR REMOVE SIGNS NOT IN USE OR CONFLICTING WITH THE TRAFFIC CONTROL PLAN. THIS WORK WILL NOT BE PAID FOR SEPARATELY BUT SHOULD BE INCLUDED IN ITEM 712-01

MARKING ABBREVIATIONS

SSWL - SINGLE SOLID WHITE LINE
SSYL - SINGLE SOLID YELLOW LINE
DSYL - DOUBLE SOLID YELLOW LINE

NOTE:
SEE T.D.O.T. STANDARD DRAWINGS FOR PAVEMENT MARKING DETAILS NOT SHOWN ON PLANS

HISTORIC FRANKLIN TENNESSEE

CITY OF FRANKLIN
ENGINEERING DEPARTMENT

TRAFFIC CONTROL (PHASE 3)

STA. 311+80 TO STA. 325+70

SCALE: 1"= 50'

9/21/2020 8:41:55 AM
Y:\Nashville\16019000S\16019033.00\Eng_Docs\Roadway\TRAFFIC CONTROL_005B.sht

TYPE	YEAR	PROJECT NO.	SHEET NO.
CONST.	2020	COF# 2019-0098	9

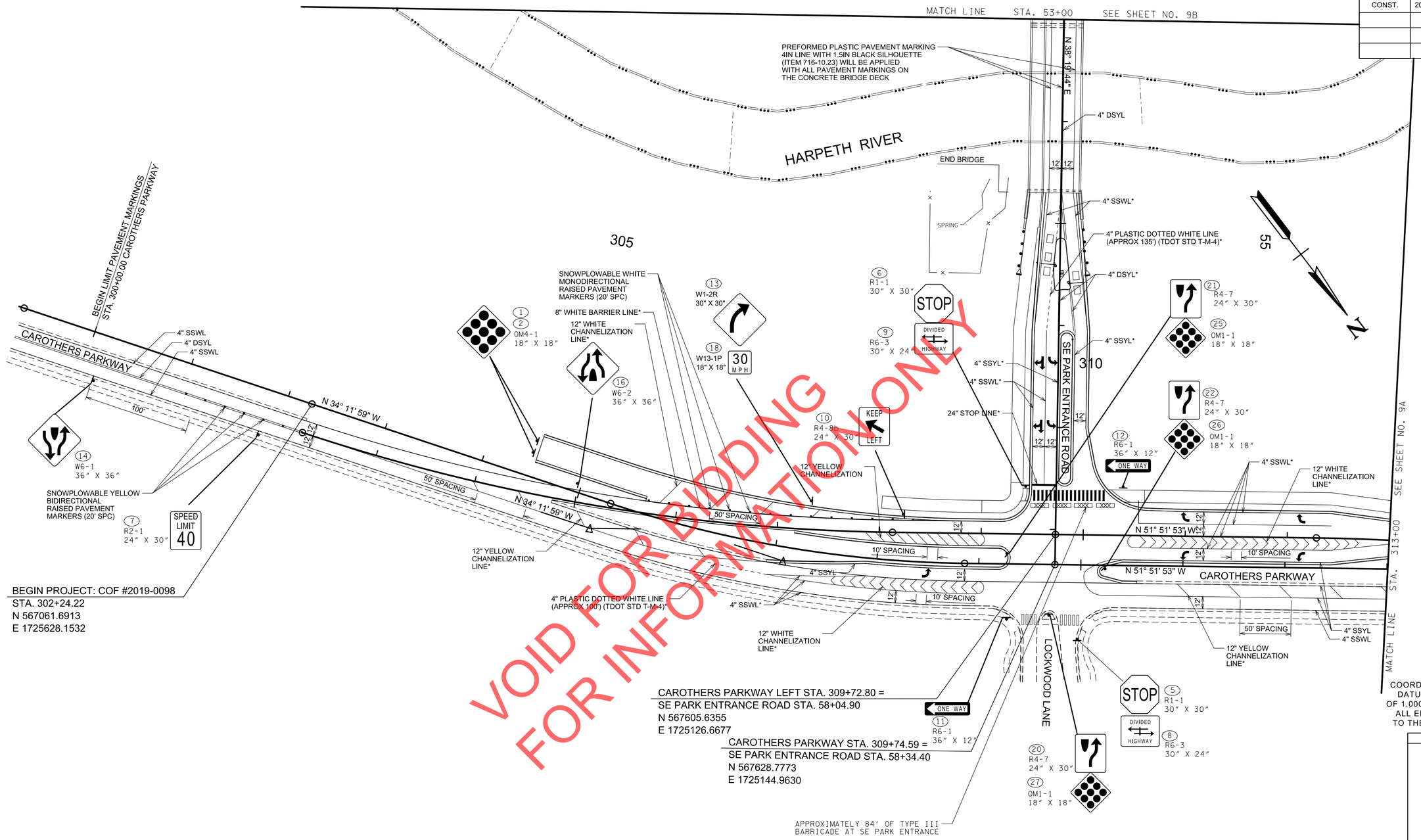

VOID FOR BIDDING
FOR INFORMATION ONLY

COORDINATES ARE NAD 83(1983), ARE DATUM ADJUSTED BY THE FACTOR OF 1.000082257 AND TIED TO THE TGRN. ALL ELEVATIONS ARE REFERENCED TO THE NAVD 1988 WITH GEOID 2003.

SEALED BY

BRIAN A. RALSTIN REGISTERED ENGINEER XVI AGRICULTURE COMMERCE No. 119683 STATE OF TENNESSEE

9/18/2020

*NOTE:
ALL PAVEMENT MARKINGS ON CONCRETE BRIDGE DECK SURFACE SHALL BE 3M STAMARK HIGH PERFORMANCE TAPE SERIES 380AW.

ALL PAVEMENT MARKINGS ON ASPHALT DRIVING SURFACE SHALL BE ENHANCED FLATLINE THERMOPLASTIC PAVEMENT MARKINGS

MARKING ABBREVIATIONS

SSWL - SINGLE SOLID WHITE LINE
SSYL - SINGLE SOLID YELLOW LINE
DSYL - DOUBLE SOLID YELLOW LINE

NOTE:
SEE T.D.O.T. STANDARD DRAWINGS FOR PAVEMENT MARKING DETAILS NOT SHOWN ON PLANS

HISTORIC FRANKLIN TENNESSEE

CITY OF FRANKLIN
ENGINEERING DEPARTMENT

SIGNING AND PAVEMENT MARKINGS

STA. 302+00 TO STA. 313+00

SCALE: 1"= 50'

9/21/2020 8:41:57 AM
Y:\nashville\16019000S\16019033.00\Eng_Docs\Roadway\SIGNING PVM_001.sht

TYPE	YEAR	PROJECT NO.	SHEET NO.
CONST.	2020	COF# 2019-0098	9A

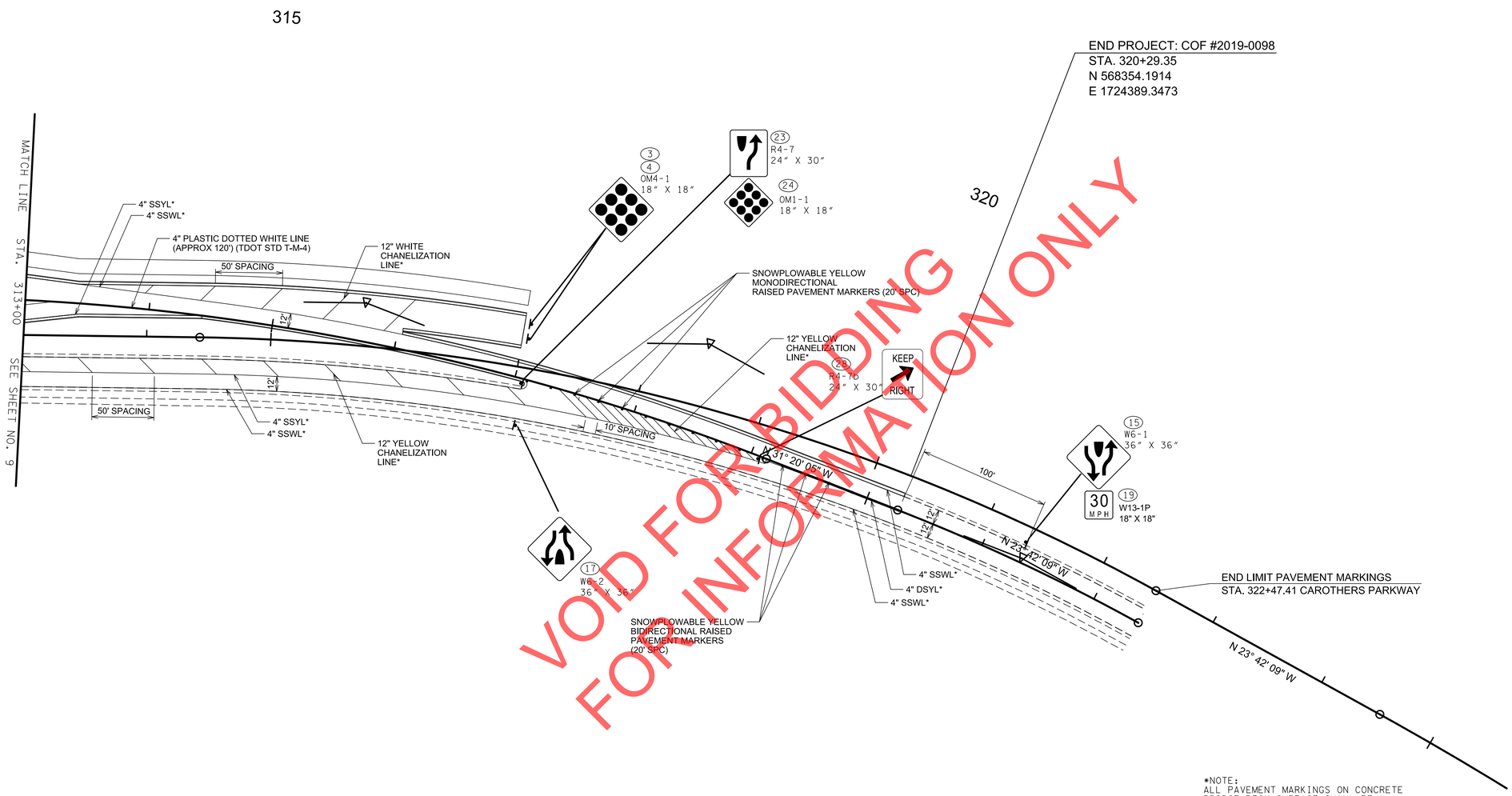

VOID FOR BIDDING
FOR INFORMATION ONLY

COORDINATES ARE NAD 83(1983), ARE DATUM ADJUSTED BY THE FACTOR OF 1.000082257 AND TIED TO THE TGRN. ALL ELEVATIONS ARE REFERENCED TO THE NAVD 1988 WITH GEOID 2003.

SEALED BY

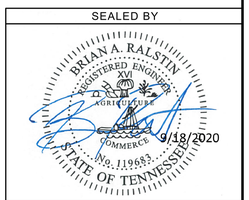

9/18/2020

*NOTE:
ALL PAVEMENT MARKINGS ON CONCRETE BRIDGE DECK SURFACE SHALL BE 3M STAMARK HIGH PERFORMANCE TAPE SERIES 380AW.

ALL PAVEMENT MARKINGS ON ASPHALT DRIVING SURFACE SHALL BE ENHANCED FLATLINE THERMOPLASTIC PAVEMENT MARKINGS

MARKING ABBREVIATIONS

SSWL - SINGLE SOLID WHITE LINE
SSYL - SINGLE SOLID YELLOW LINE
DSYL - DOUBLE SOLID YELLOW LINE

NOTE:
SEE T.D.O.T. STANDARD DRAWINGS FOR PAVEMENT MARKING DETAILS NOT SHOWN ON PLANS

HISTORIC FRANKLIN TENNESSEE

CITY OF FRANKLIN
ENGINEERING DEPARTMENT

SIGNING AND PAVEMENT MARKINGS

STA. 313+00 TO STA. 323+00

SCALE: 1"= 50'

9/21/2020 8:41:59 AM
Y:\nashville\16019000S\16019033.00\Eng_Docs\Roadway\SIGNING PVM_002.sht

TYPE	YEAR	PROJECT NO.	SHEET NO.
CONST.	2020	COF# 2019-0098	9B

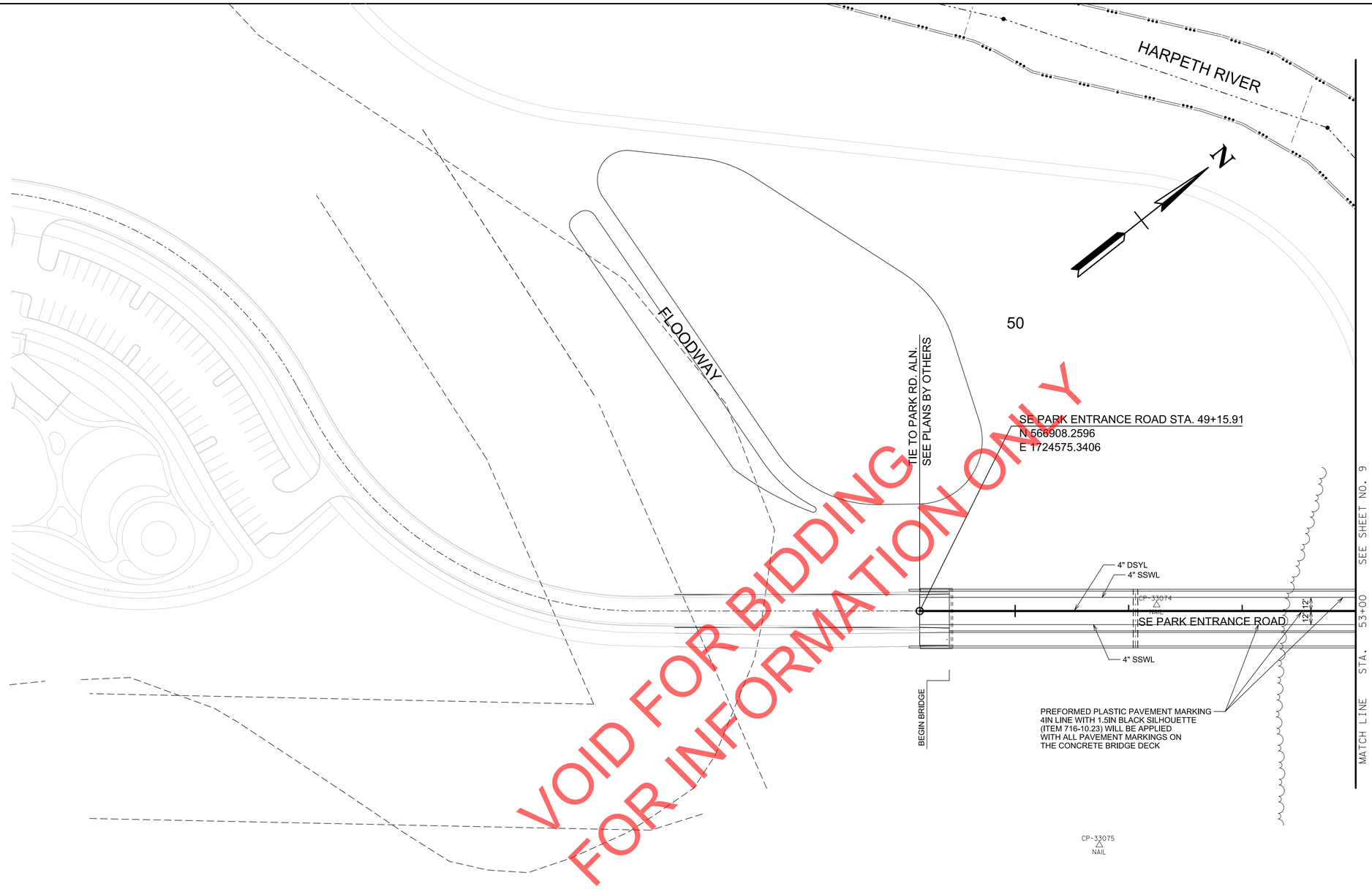

VOID FOR BIDDING
FOR INFORMATION ONLY

COORDINATES ARE NAD 83(1983), ARE DATUM ADJUSTED BY THE FACTOR OF 1.000082257 AND TIED TO THE TGRN. ALL ELEVATIONS ARE REFERENCED TO THE NAVD 1988 WITH GEOID 2003.

SEALED BY

BRIAN A. RALSTIN
REGISTERED ENGINEER
No. 119683
STATE OF TENNESSEE
9/18/2020

*NOTE:
ALL PAVEMENT MARKINGS ON CONCRETE BRIDGE DECK SURFACE SHALL BE 3M STAMARK HIGH PERFORMANCE TAPE SERIES 380AW.

ALL PAVEMENT MARKINGS ON ASPHALT DRIVING SURFACE SHALL BE ENHANCED FLATLINE THERMOPLASTIC PAVEMENT MARKINGS

MARKING ABBREVIATIONS

SSWL - SINGLE SOLID WHITE LINE
SSYL - SINGLE SOLID YELLOW LINE
DSYL - DOUBLE SOLID YELLOW LINE

NOTE:
SEE T.D.O.T. STANDARD DRAWINGS FOR PAVEMENT MARKING DETAILS NOT SHOWN ON PLANS

HISTORIC FRANKLIN TENNESSEE

CITY OF FRANKLIN
ENGINEERING DEPARTMENT

SIGNING AND PAVEMENT MARKINGS

STA. 47+00 TO STA. 53+00

SCALE: 1"= 50'

9/21/2020 8:42:02 AM
Y:\nashville\16019000S\16019033.00\Eng_Docs\Roadway\SIGNING PVM_003.sht

ALL SIGNS SHOWN WITH DESIGNATIONS ARE TO BE FABRICATED AS DETAILED IN THE "MANUAL ON UNIFORM TRAFFIC CONTROL DEVICES" (CURRENT EDITION)

THE FOLLOWING STANDARD DRAWINGS APPLY UNLESS OTHERWISE NOTED IN THE REMARKS: FLAT SHEET (T-S SERIES 10, 12, 16, 17, 19, 20); EXTRUDED PANEL (T-S SERIES 6, 9, 13, 14); WALL/BARRIER MOUNTED (T-S-21), MULTI-DIRECTIONAL BASE (T-S SERIES 23A, 23B, 23C); RAILROAD (T-S-16)

TYPE	YEAR	PROJECT NO.	SHEET NO.
CONST.	2020	COF# 2019-0098	9C

SIGN NO	LEGEND		SHEET NO	SIZE				COPY				SHIELD	ARROW	SIGN FACE			STEEL DESIGN (BREAK-AWAY)					MINIMUM VERTICAL CLEARANCE	REMARKS
				LENGTH	HEIGHT	RADIUS	BORDER WIDTH	CAPITAL	LOWER CASE	NUMERAL	SERIES			COPY	BACKGROUND	MATERIAL	SUPPORT TYPE	SUPPORT LENGTH	FOOTING	CONC. CU. YD.	REIN STEEL LBS.		
1 2 3 4		OM4-1	9 9 A	18″	18″									RED (REF.)	RED	0.080″ SHEET ALUMINUM	P8	H = 9′-0″				7′-0″	SLIP BASE REQUIRED ITEM NO. 713-11.21 SEE STD. DRAWING T-S-23A INCLUDE 7LF OF RED SIGN POST DELINEATION ENHANCEMENT ITEM NO. 713-02.21
5 6		R1-1	9	30″	30″									WHITE (REF.)	RED (REF.)	0.080″ SHEET ALUMINUM	P8	H = 10′-0″				6′-0″	SLIP BASE REQUIRED ITEM NO. 713-11.21 SEE STD. DRAWING T-S-23A INCLUDE 6LF OF RED SIGN POST DELINEATION ENHANCEMENT ITEM NO. 713-02.21
7		R2-1	9	24″	30″									BLACK (REF.)	WHITE (REF.)	0.080″ SHEET ALUMINUM	P8	H = 10′-0″				7′-0″	SLIP BASE REQUIRED ITEM NO. 713-11.21 SEE STD. DRAWING T-S-23A
8 9		R6-3	9	30″	24″									BLACK (REF.)	WHITE (REF.)	0.080″ SHEET ALUMINUM							SIGN 8 INCLUDED ON POST WITH SIGN 5 SIGN 9 INCLUDED ON POST WITH SIGN 6
10		R4-8B	9	24″	30″									BLACK (REF.)	WHITE (REF.)	0.080″ SHEET ALUMINUM	P8	H = 10′-0″				7′-0″	SLIP BASE REQUIRED ITEM NO. 713-11.21 SEE STD. DRAWING T-S-23A
11 12		R6-1	9	36″	12″									BLACK (REF.)	WHITE (REF.)	0.080″ SHEET ALUMINUM	P8	H = 8′-0″				7′-0″	SLIP BASE REQUIRED ITEM NO. 713-11.21 SEE STD. DRAWING T-S-23A
13	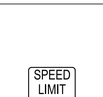	W1-2R	9	30″	30″									BLACK (REF.)	YELLOW (REF.)	0.080″ SHEET ALUMINUM	P8	H = 10′-0″				6′-0″	SLIP BASE REQUIRED ITEM NO. 713-11.21 SEE STD. DRAWING T-S-23A

VOID FOR BIDDING
FOR INFORMATION ONLY

SEALED BY

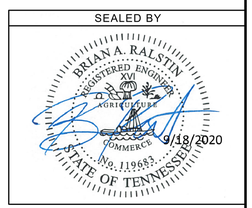

HISTORIC FRANKLIN TENNESSEE

CITY OF FRANKLIN
ENGINEERING DEPARTMENT

SIGN SCHEDULE

9/21/2020 8:42:03 AM
Y:\Nashville\16019000S\16019033.00\Eng_Docs\Roadway\SIGNING PVM_SIGN-SCHEDULE.sht

ALL SIGNS SHOWN WITH DESIGNATIONS ARE TO BE FABRICATED AS DETAILED IN THE "MANUAL ON UNIFORM TRAFFIC CONTROL DEVICES" (CURRENT EDITION)

THE FOLLOWING STANDARD DRAWINGS APPLY UNLESS OTHERWISE NOTED IN THE REMARKS: FLAT SHEET (T-S SERIES 10, 12, 16, 17, 19, 20); EXTRUDED PANEL (T-S SERIES 6, 9, 13, 14); WALL/BARRIER MOUNTED (T-S-21), MULTI-DIRECTIONAL BASE (T-S SERIES 23A, 23B, 23C); RAILROAD (T-S-16)

TYPE	YEAR	PROJECT NO.	SHEET NO.
CONST.	2020	COF# 2019-0098	9D

SIGN NO	LEGEND		SHEET NO	SIZE				COPY				SHIELD	ARROW	SIGN FACE			STEEL DESIGN (BREAK-AWAY)					MINIMUM VERTICAL CLEARANCE	REMARKS
				LENGTH	HEIGHT	RADIUS	BORDER WIDTH	CAPITAL	LOWER CASE	NUMERAL	SERIES			COPY	BACKGROUND	MATERIAL	SUPPORT TYPE	SUPPORT LENGTH	FOOTING	CONC. CU. YD.	REIN STEEL LBS.		
14 15		W6-1	9 9A	36″	36″									BLACK (REF.)	YELLOW (REF.)	0.080″ SHEET ALUMINUM	P8	H = 10′-0″ H = 11′-0″				7′-0″	SLIP BASE REQUIRED ITEM NO. 713-11.21 SEE STD. DRAWING T-S-23A INCLUDE 7LF OF YELLOW SIGN POST DELINEATION ENHANCEMENT ITEM NO. 713-02.21
16 17		W6-2	9 9A	36″	36″									BLACK (REF.)	YELLOW (REF.)	0.080″ SHEET ALUMINUM	P8	H = 10′-0″				7′-0″	SLIP BASE REQUIRED ITEM NO. 713-11.21 SEE STD. DRAWING T-S-23A INCLUDE 7LF OF YELLOW SIGN POST DELINEATION ENHANCEMENT ITEM NO. 713-02.21
18 19		W13-1P	9 9A	18″	18″									BLACK (REF.)	YELLOW (REF.)	0.080″ SHEET ALUMINUM							SIGN 18 INCLUDED ON POST WITH SIGN 13 SIGN 19 INCLUDED ON POST WITH SIGN 15
20 21 22 23		R4-7	9 9A	24″	30″									BLACK (REF.)	WHITE (REF.)	0.080″ SHEET ALUMINUM	P8	H = 10′-0″				6′-0″	SLIP BASE REQUIRED ITEM NO. 713-11.21 SEE STD. DRAWING T-S-23A INCLUDE 6LF OF YELLOW SIGN POST DELINEATION ENHANCEMENT ITEM NO. 713-02.21
24 25 26 27		OM1-1	9 9A	18″	18″									YELLOW (REF.)	YELLOW	0.080″ SHEET ALUMINUM							SIGN 24 INCLUDED ON POST WITH SIGN 23 SIGN 25 INCLUDED ON POST WITH SIGN 21 SIGN 26 INCLUDED ON POST WITH SIGN 22 SIGN 27 INCLUDED ON POST WITH SIGN 20
28		R4-7b	9A	24″	30″									BLACK (REF.)	WHITE (REF.)	0.080″ SHEET ALUMINUM	P8	H = 10′-0″				7′-0″	SLIP BASE REQUIRED ITEM NO. 713-11.21 SEE STD. DRAWING T-S-23A
29		R11-2	9	48″	30″									BLACK (REF.)	WHITE (REF.)	0.080″ SHEET ALUMINUM							SIGN 29 MOUNTED ON TYPE III BARRICADE

VOID FOR BIDDING
FOR INFORMATION ONLY

SEALED BY

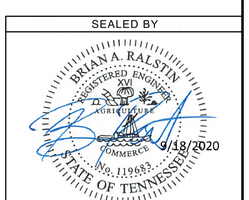

HISTORIC FRANKLIN TENNESSEE

CITY OF FRANKLIN
ENGINEERING DEPARTMENT

SIGN SCHEDULE

9/21/2020 8:42:05 AM
Y:\Nashville\16019000S\16019033.00\Eng_Docs\Roadway\SIGNING PVM_SIGN-SCHEDULE2.sht

TYPE	YEAR	PROJECT NO.	SHEET NO.
CONST.	2020	COF# 2019-0098	10

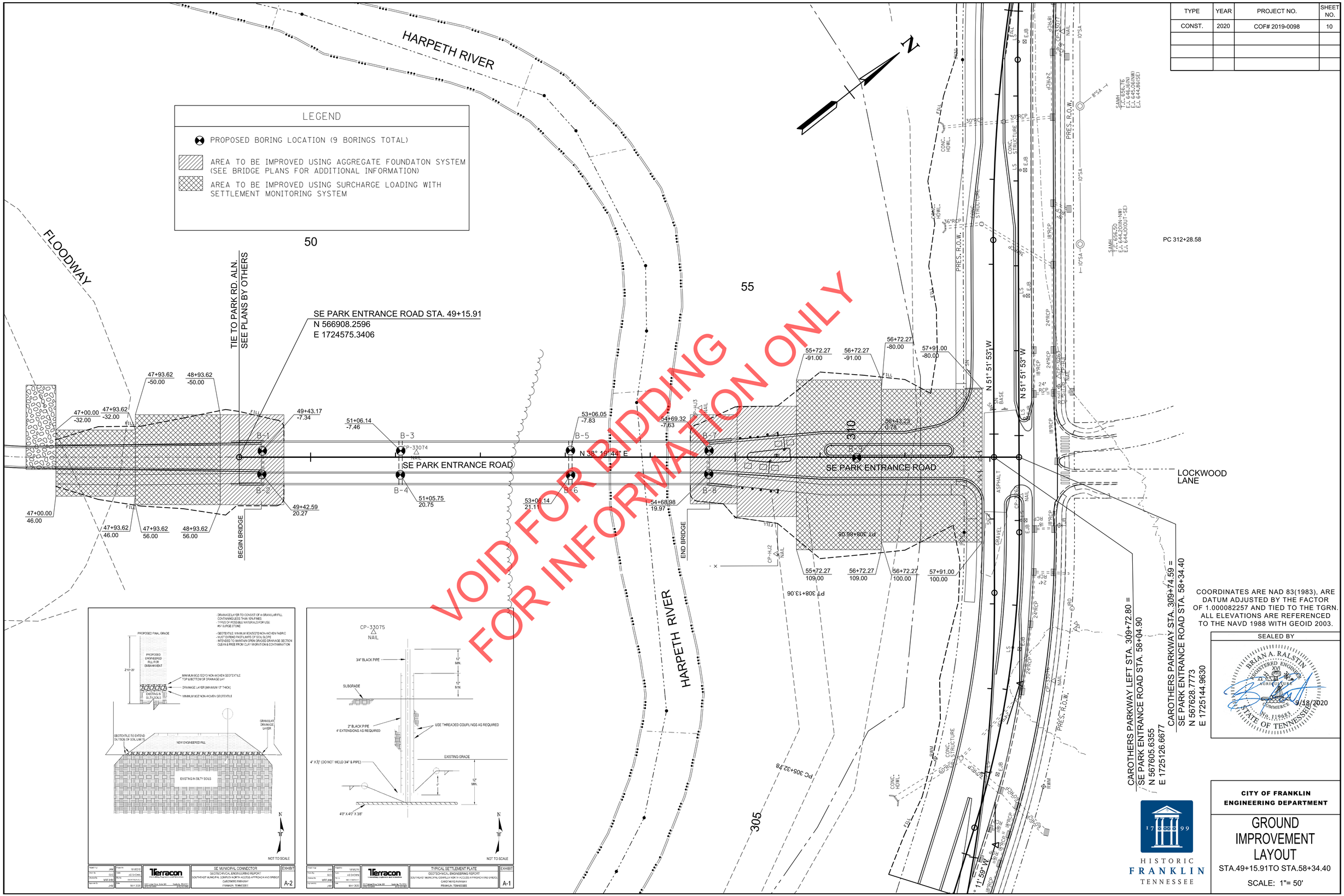

COORDINATES ARE NAD 83(1983), ARE DATUM ADJUSTED BY THE FACTOR OF 1.000082257 AND TIED TO THE TGRN. ALL ELEVATIONS ARE REFERENCED TO THE NAVD 1988 WITH GEOID 2003.

SEALED BY

BRIAN A. RALSTIN
REGISTERED ENGINEER
No. 119663
STATE OF TENNESSEE
9/18/2020

HISTORIC FRANKLIN TENNESSEE

CITY OF FRANKLIN
ENGINEERING DEPARTMENT

GROUND IMPROVEMENT LAYOUT

STA.49+15.91TO STA.58+34.40

SCALE: 1"= 50'

TYPE	YEAR	PROJECT NO.	SHEET NO.
PRELIM.	2020	COF# 2019-0098	11

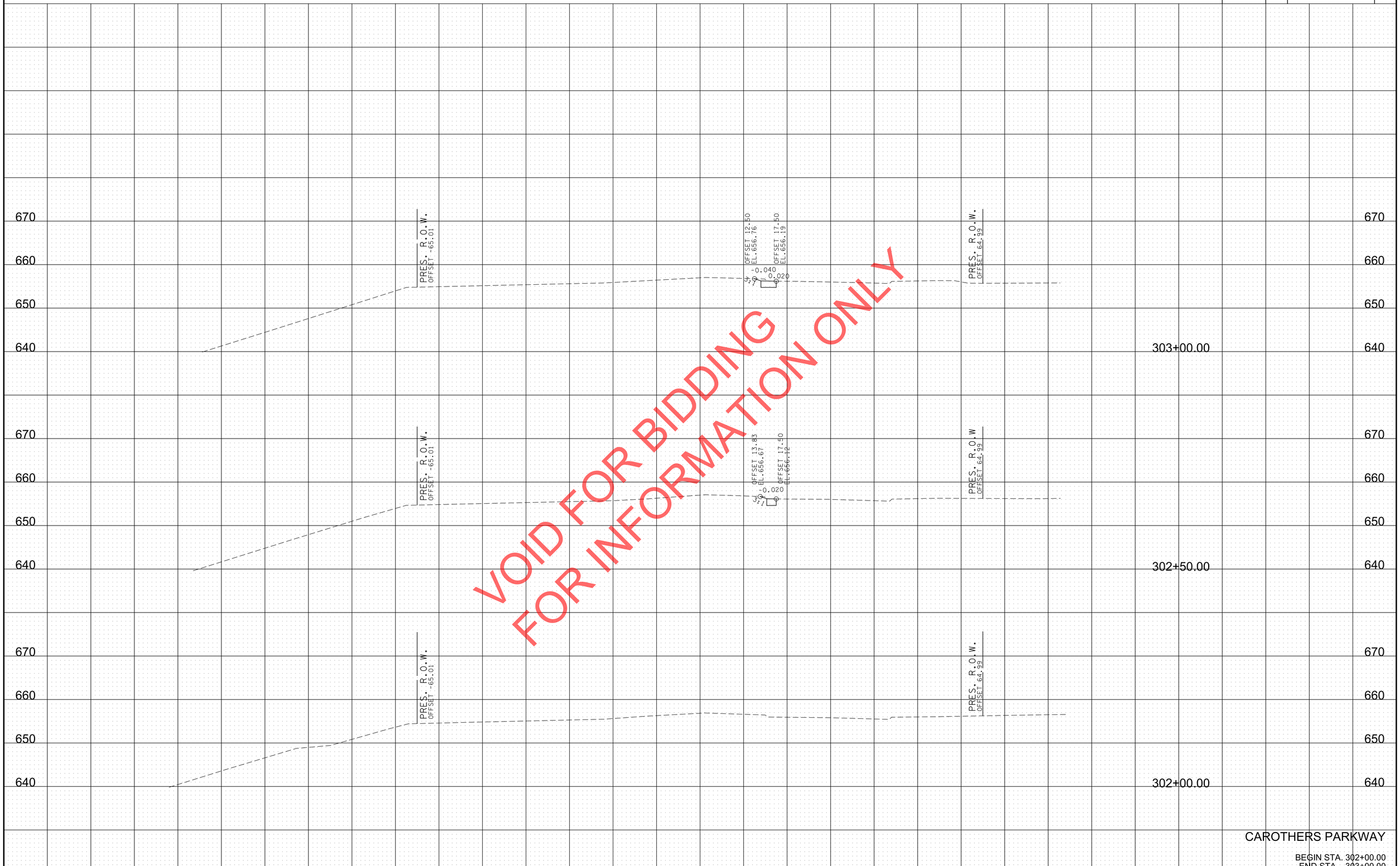

VOID FOR BIDDING
FOR INFORMATION ONLY

CAROTHERS PARKWAY

BEGIN STA. 302+00.00
END STA. 303+00.00

9/21/2020 8:42:14 AM
Y:\Nashville\16019000S\16019033.00\Eng_Docs\Roadway\SE Park Cross Sections_Carothers.sht

TYPE	YEAR	PROJECT NO.	SHEET NO.
PRELIM.	2020	COF# 2019-0098	12

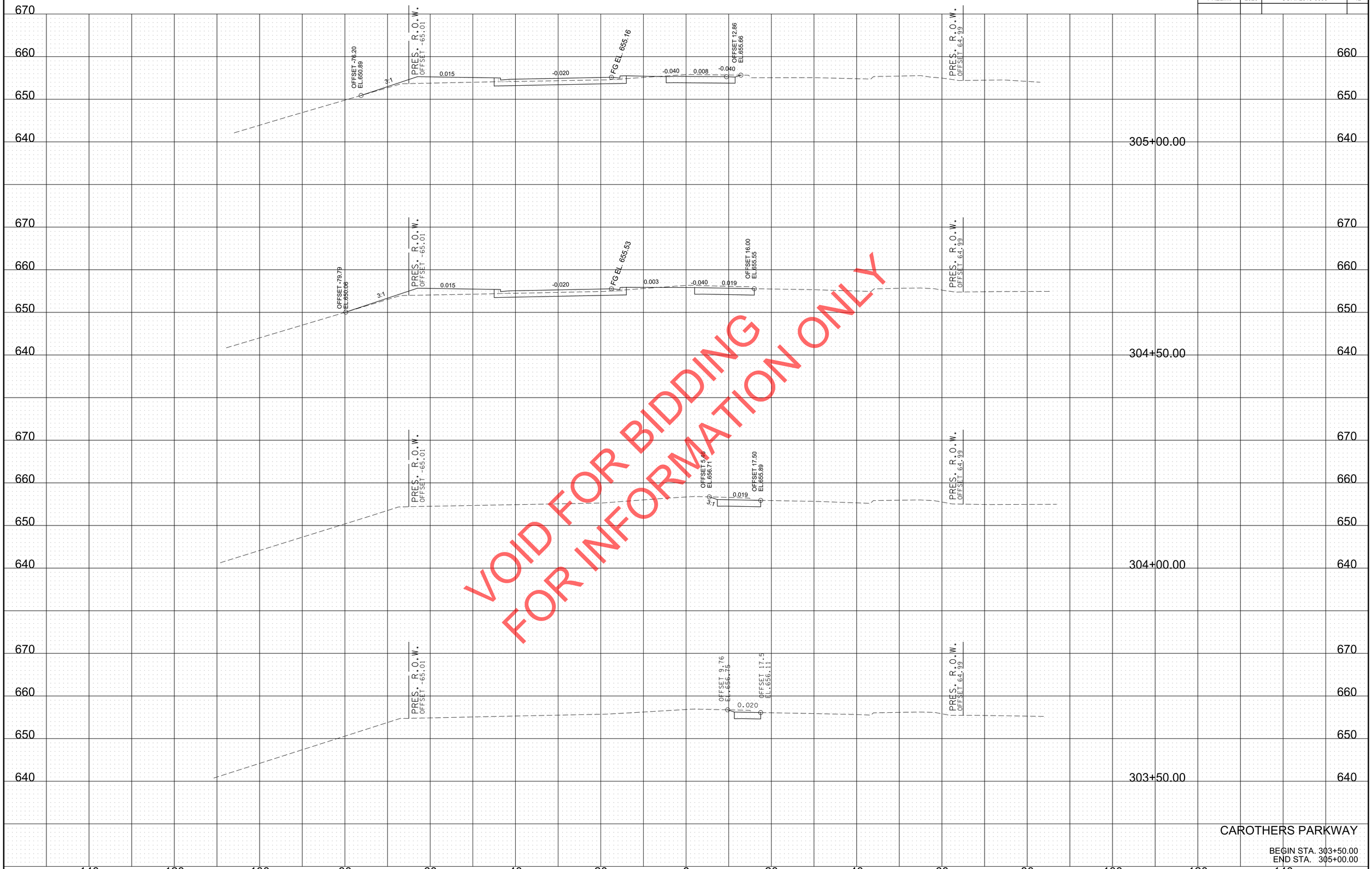

VOID FOR BIDDING
FOR INFORMATION ONLY

CAROTHERS PARKWAY

BEGIN STA. 303+50.00
END STA. 305+00.00

9/21/2020 8:42:26 AM
Y:\Nashville\16019000S\16019033.00\Eng_Docs\Roadway\SE Park Cross Sections_Carothers.sht

TYPE	YEAR	PROJECT NO.	SHEET NO.
PRELIM.	2020	COF# 2019-0098	13

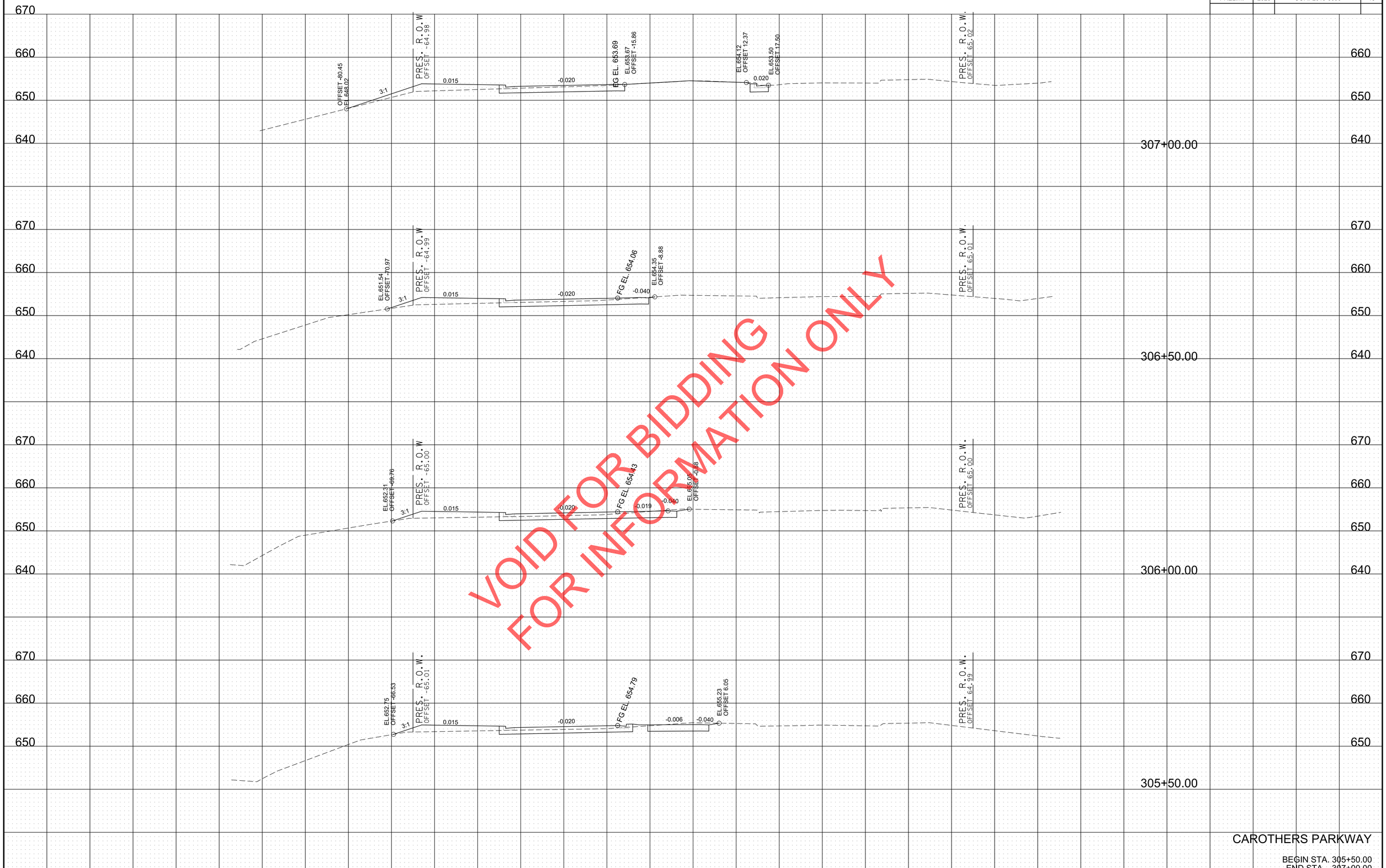

VOID FOR BIDDING
FOR INFORMATION ONLY

CAROTHERS PARKWAY

BEGIN STA. 305+50.00
END STA. 307+00.00

TYPE	YEAR	PROJECT NO.	SHEET NO.
PRELIM.	2020	COF# 2019-0098	14

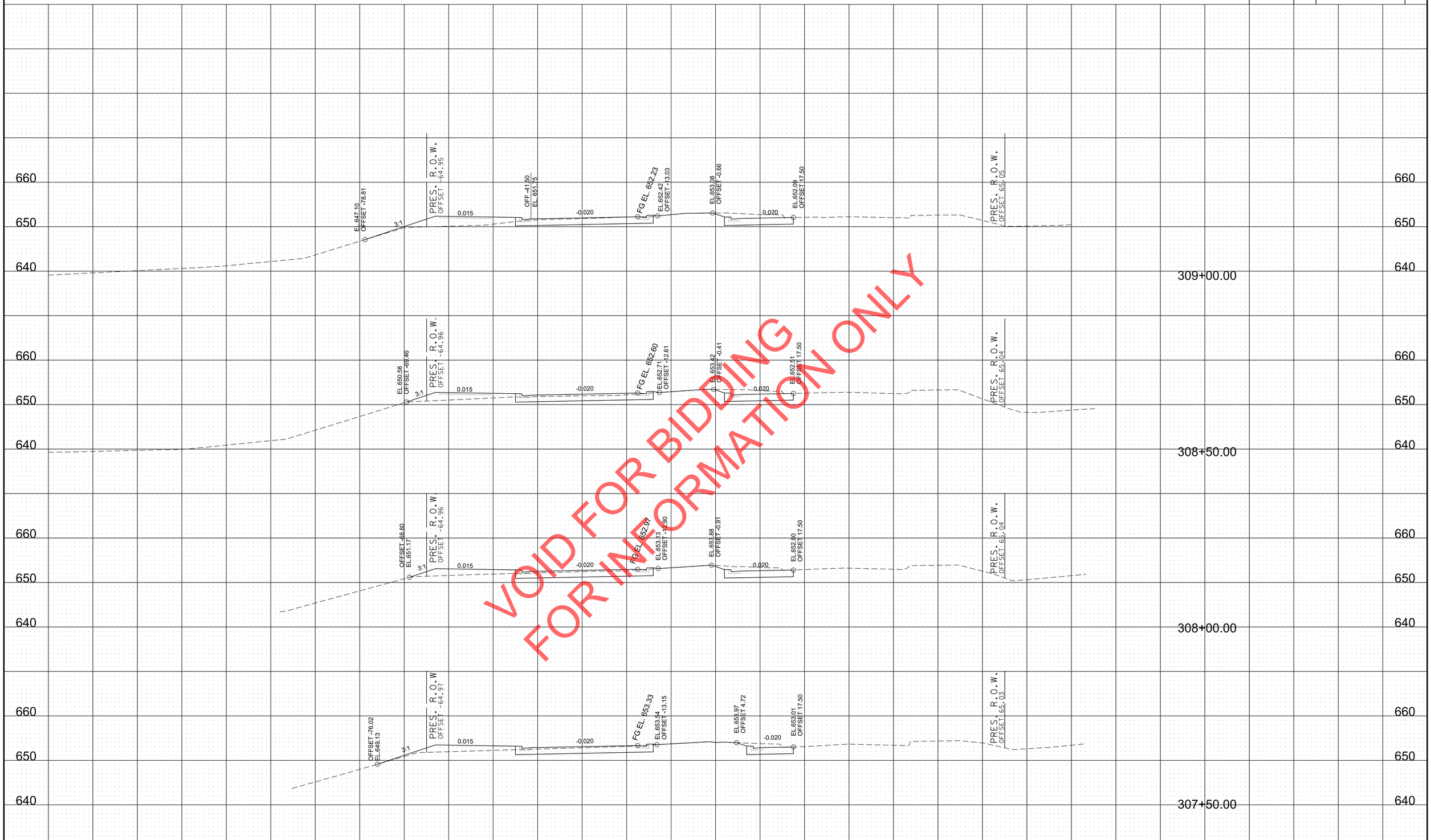

VOID FOR BIDDING
FOR INFORMATION ONLY

CAROTHERS PARKWAY

BEGIN STA. 307+50.00
END STA. 309+00.00

9/21/2020 8:42:17 AM
Y:\Nashville\16019000S\16019033.00\Eng_Docs\Roadway\SE Park Cross Sections_Carothers.sht

TYPE	YEAR	PROJECT NO.	SHEET NO.
PRELIM.	2020	COF# 2019-0098	15

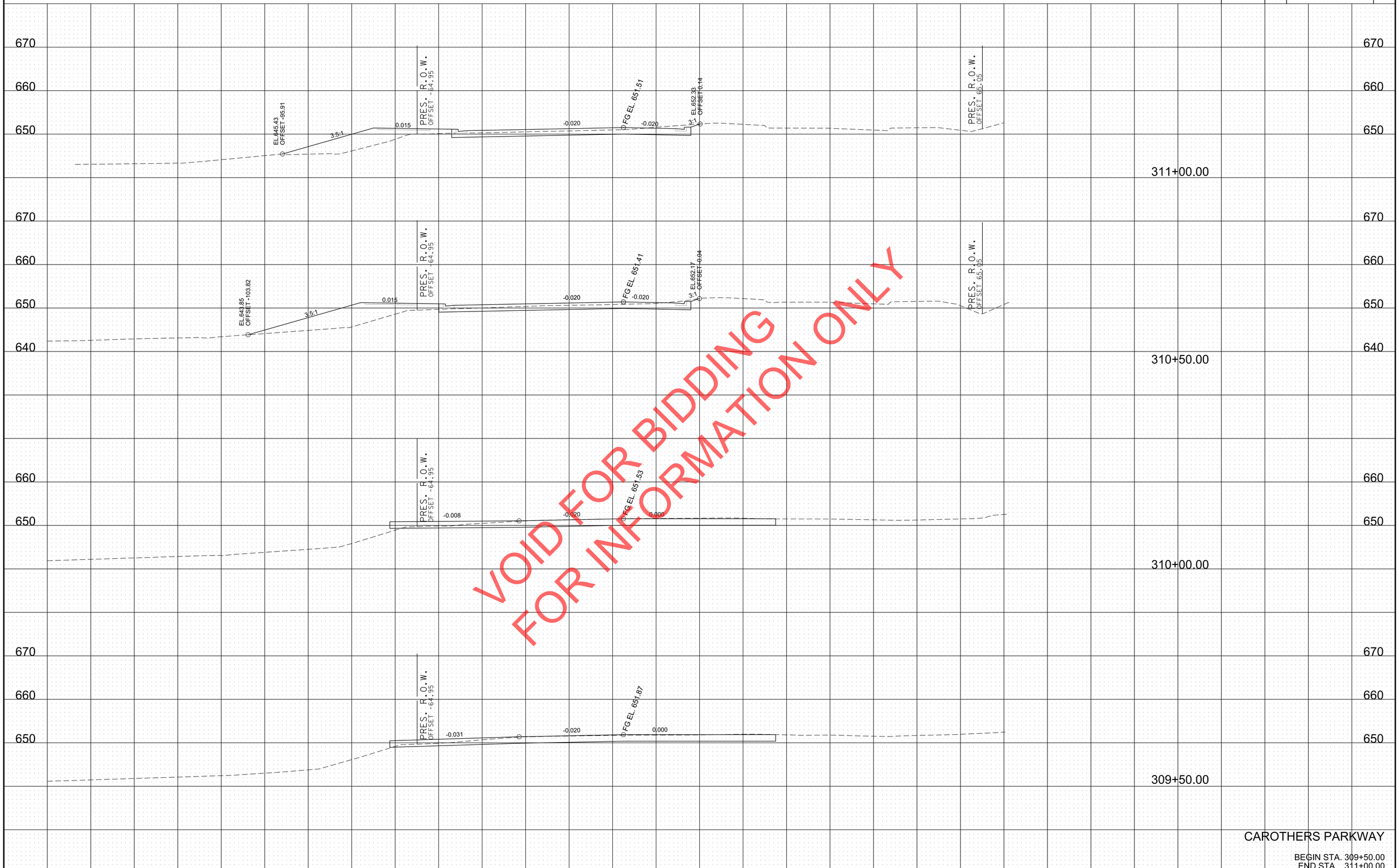

VOID FOR BIDDING
FOR INFORMATION ONLY

CAROTHERS PARKWAY

BEGIN STA. 309+50.00
END STA. 311+00.00

9/21/2020 8:42:18 AM
Y:\Nashville\16019000S\16019033.00\Eng_Docs\Roadway\SE Park Cross Sections_Carothers.sht

TYPE	YEAR	PROJECT NO.	SHEET NO.
PRELIM.	2020	COF# 2019-0098	16

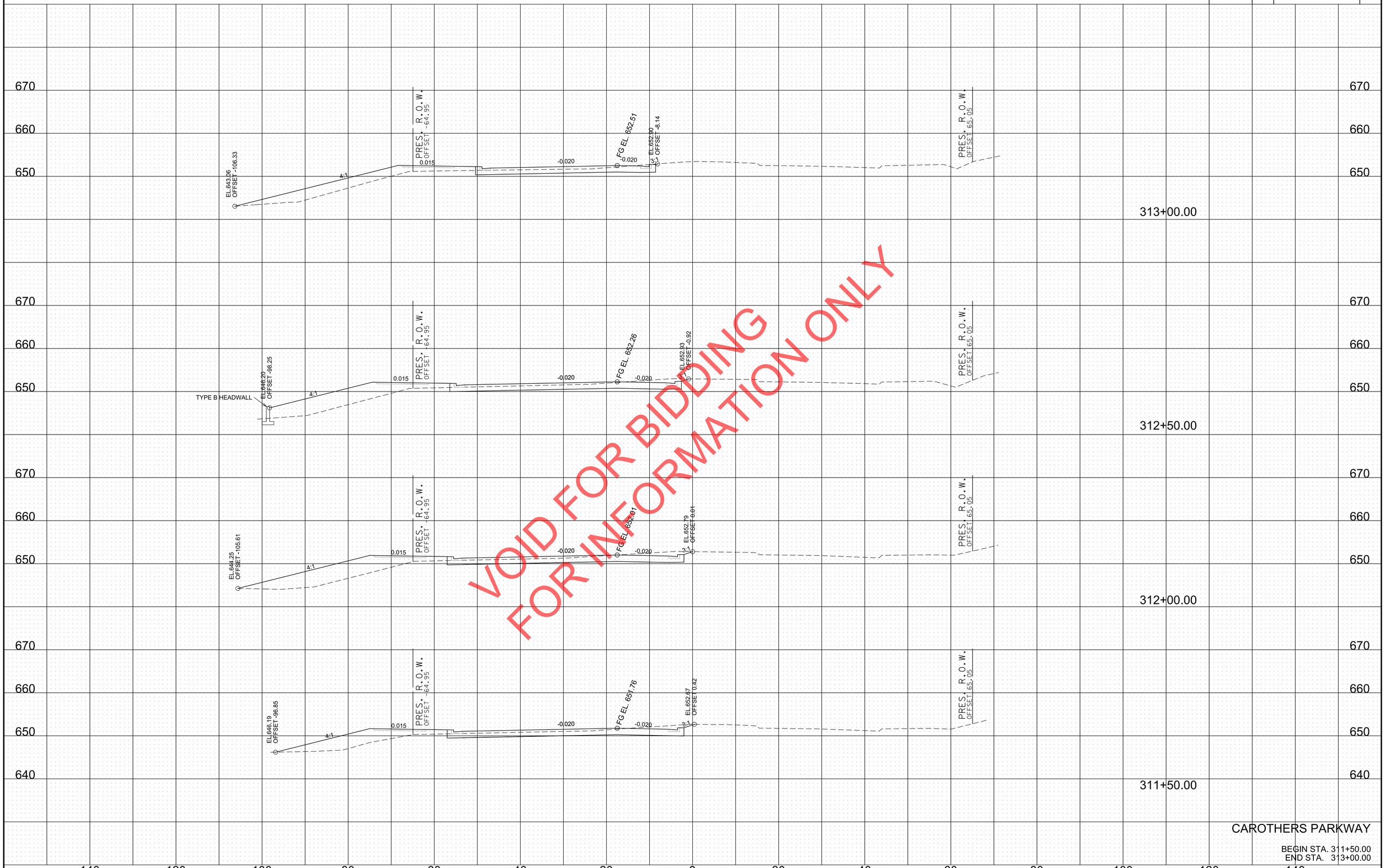

VOID FOR BIDDING
FOR INFORMATION ONLY

CAROTHERS PARKWAY

BEGIN STA. 311+50.00
END STA. 313+00.00

9/21/2020 8:42:19 AM
Y:\Nashville\16019000S\16019033.00\Eng_Docs\Roadway\SE Park Cross Sections_Carothers.sht

TYPE	YEAR	PROJECT NO.	SHEET NO.
PRELIM.	2020	COF# 2019-0098	17

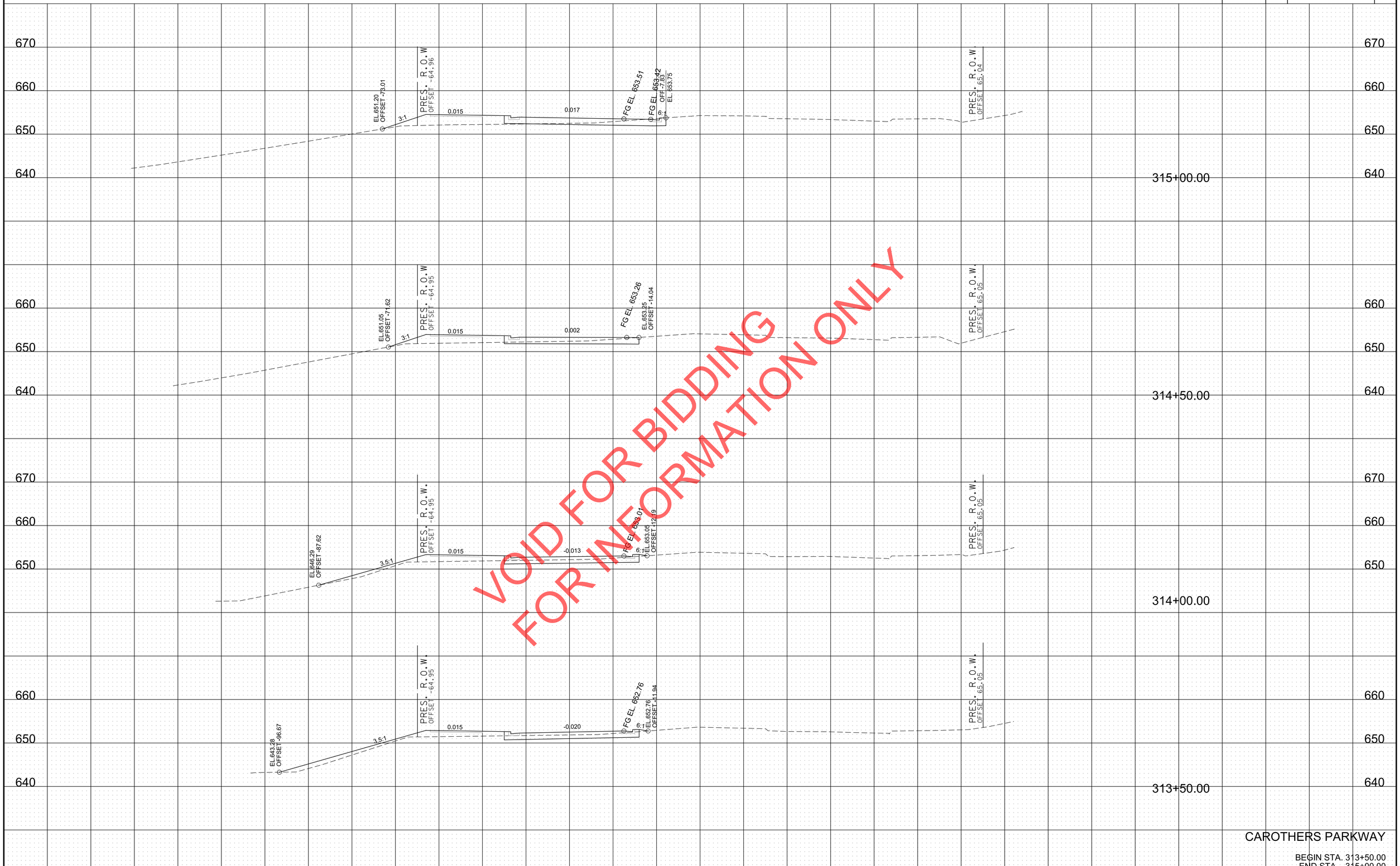

VOID FOR BIDDING
FOR INFORMATION ONLY

CAROTHERS PARKWAY

BEGIN STA. 313+50.00
END STA. 315+00.00

TYPE	YEAR	PROJECT NO.	SHEET NO.
PRELIM.	2020	COF# 2019-0098	18

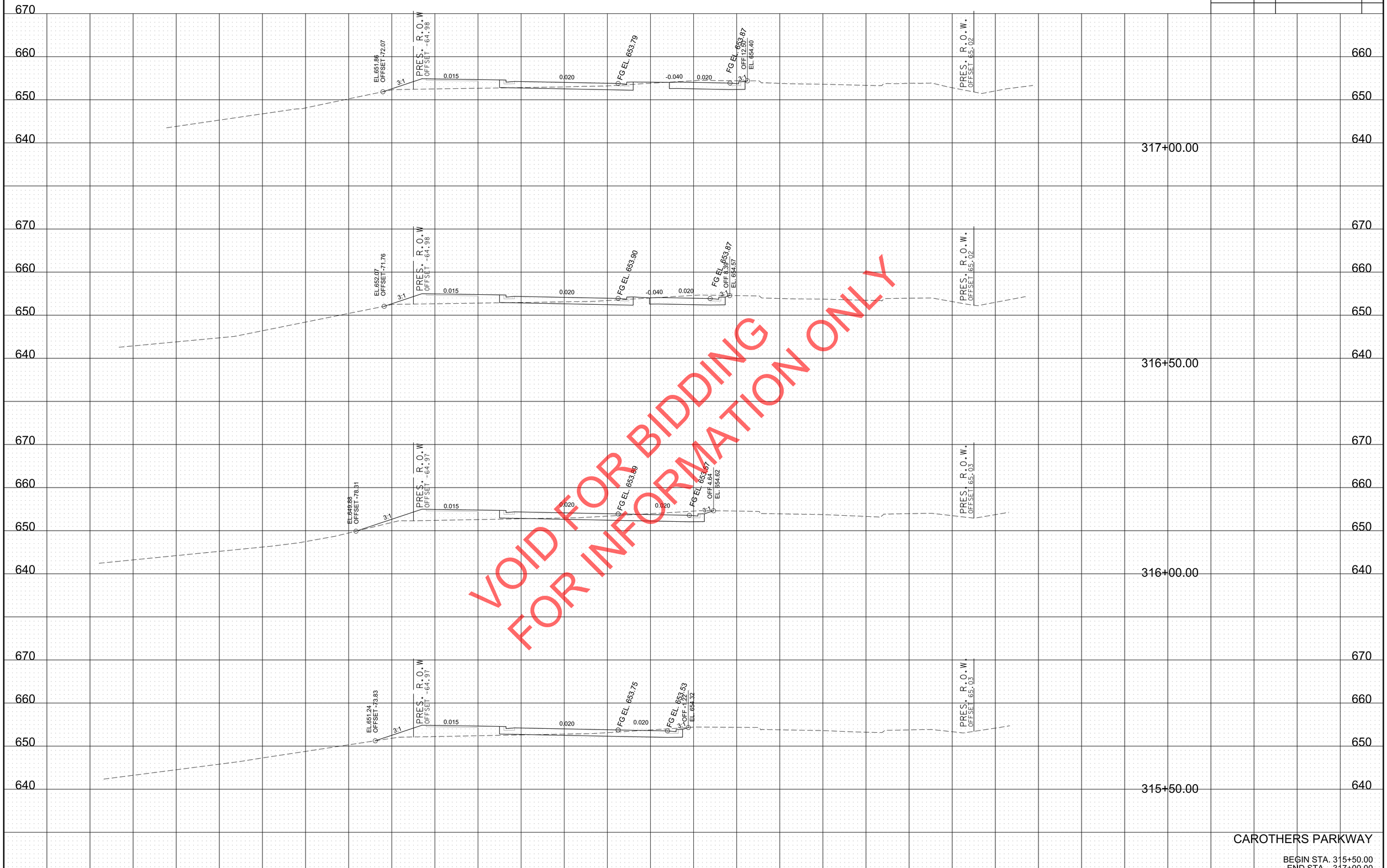

VOID FOR BIDDING
FOR INFORMATION ONLY

CAROTHERS PARKWAY

BEGIN STA. 315+50.00
END STA. 317+00.00

9/21/2020 8:42:22 AM
Y:\Nashville\16019000S\16019033.00\Eng_Docs\Roadway\SE Park Cross Sections_Carothers.sht

TYPE	YEAR	PROJECT NO.	SHEET NO.
PRELIM.	2020	COF# 2019-0098	19

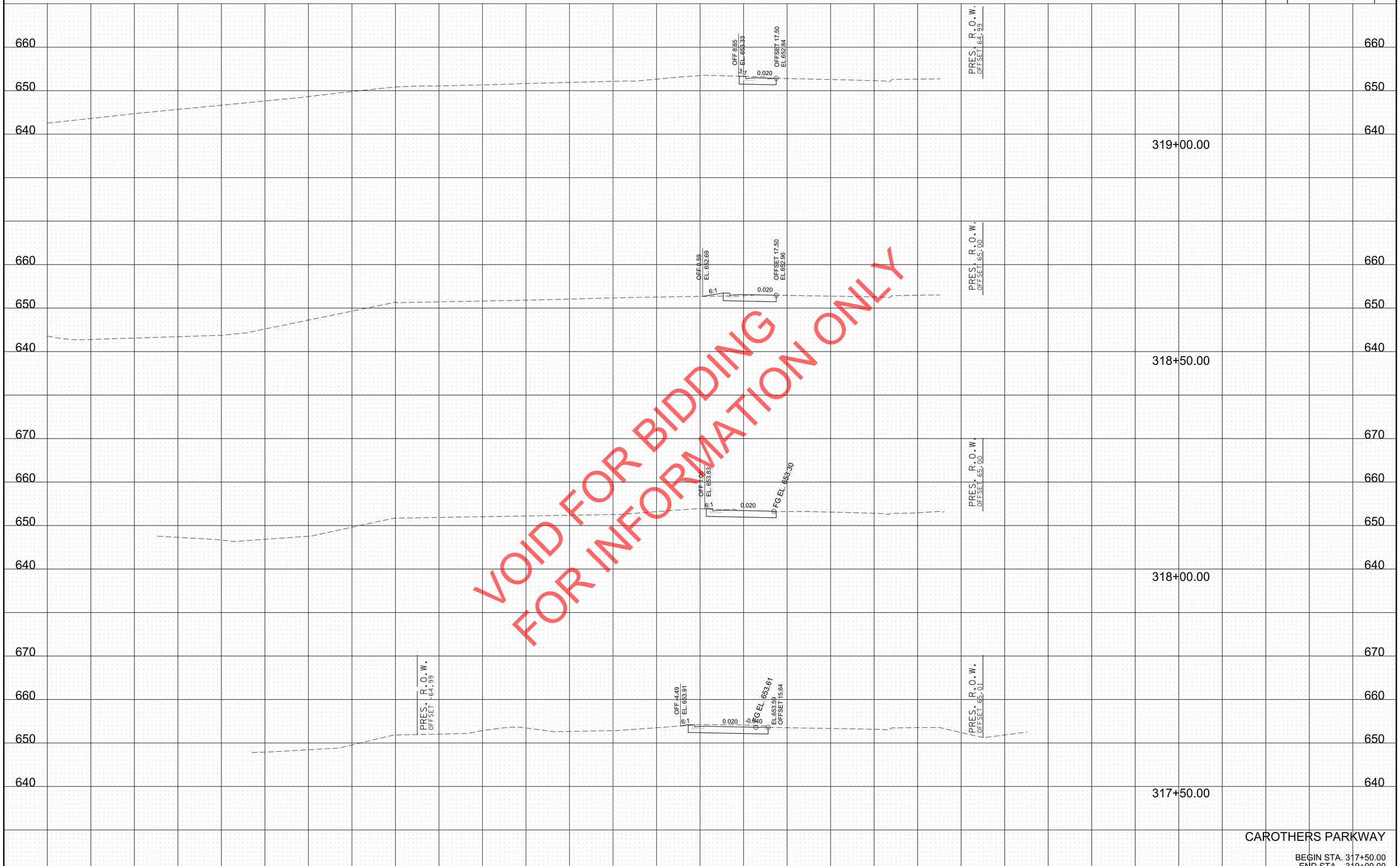

VOID FOR BIDDING
FOR INFORMATION ONLY

CAROTHERS PARKWAY

BEGIN STA. 317+50.00
END STA. 319+00.00

9/21/2020 8:42:23 AM
Y:\Nashville\16019000S\16019033.00\Eng_Docs\Roadway\SE Park Cross Sections_Carothers.sht

TYPE	YEAR	PROJECT NO.	SHEET NO.
PRELIM.	2020	COF# 2019-0098	20

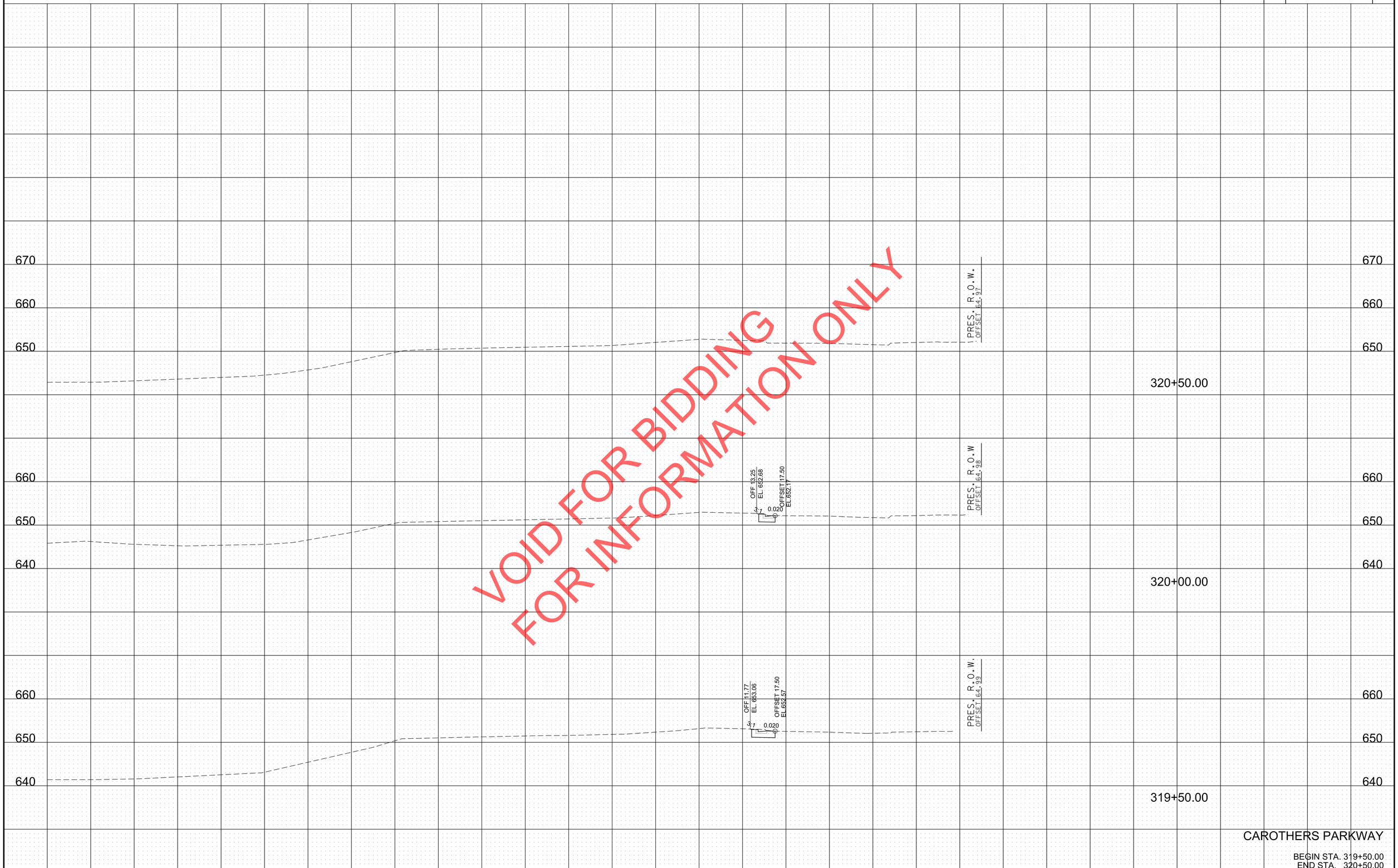

VOID FOR BIDDING
FOR INFORMATION ONLY

CAROTHERS PARKWAY

BEGIN STA. 319+50.00
END STA. 320+50.00

9/21/2020 8:42:24 AM
Y:\Nashville\16019000S\16019033.00\Eng_Docs\Roadway\SE Park Cross Sections_Carothers.sht

TYPE	YEAR	PROJECT NO.	SHEET NO.
PRELIM.	2020	COF# 2019-0098	21

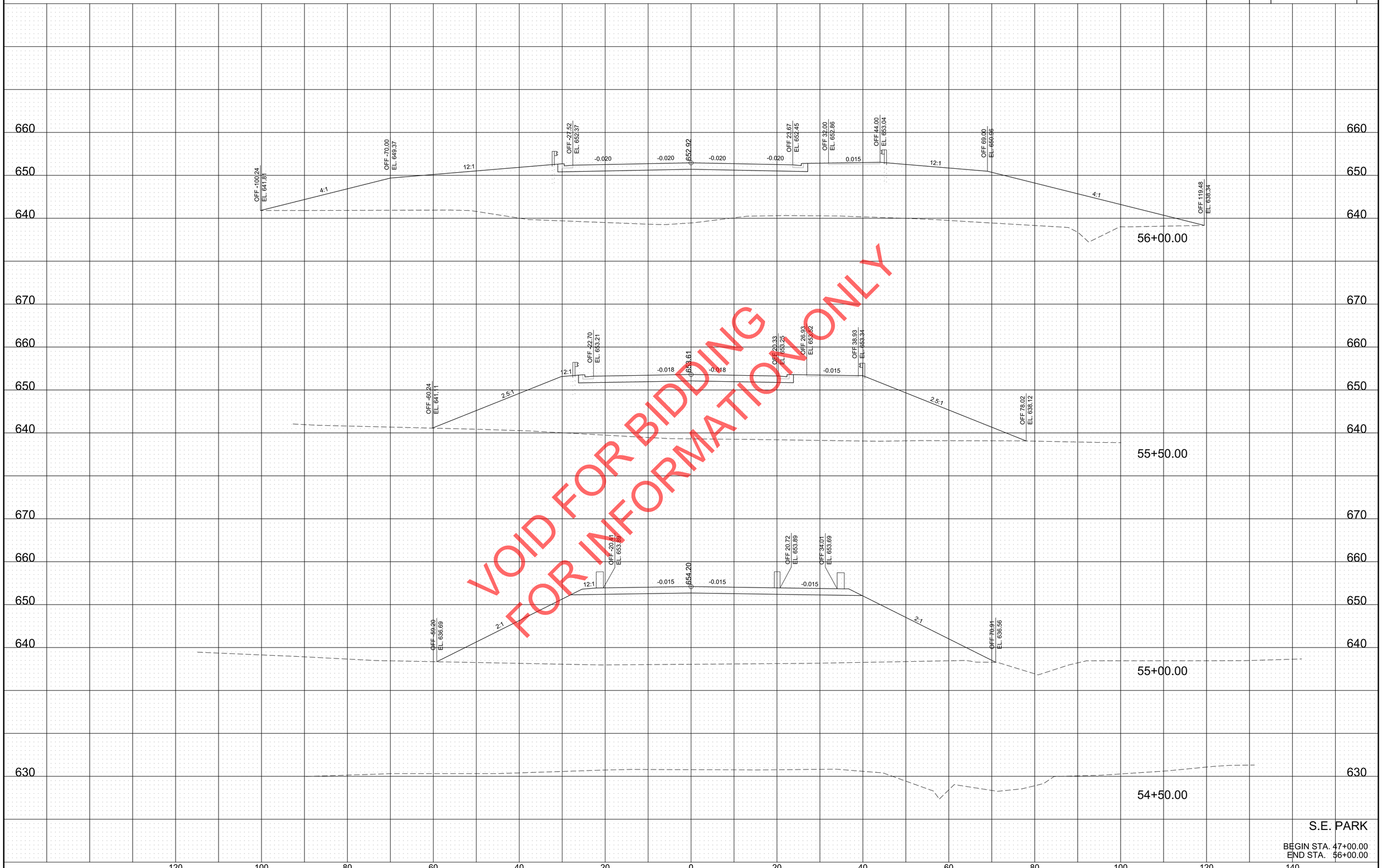

VOID FOR BIDDING
FOR INFORMATION ONLY

S.E. PARK

BEGIN STA. 47+00.00
END STA. 56+00.00

9/21/2020 8:42:28 AM
Y:\Nashville\16019000S\16019033.00\Eng_Docs\Roadway\SE Park Cross Sections_SEPark.sht

TYPE	YEAR	PROJECT NO.	SHEET NO.
PRELIM.	2020	COF# 2019-0098	22

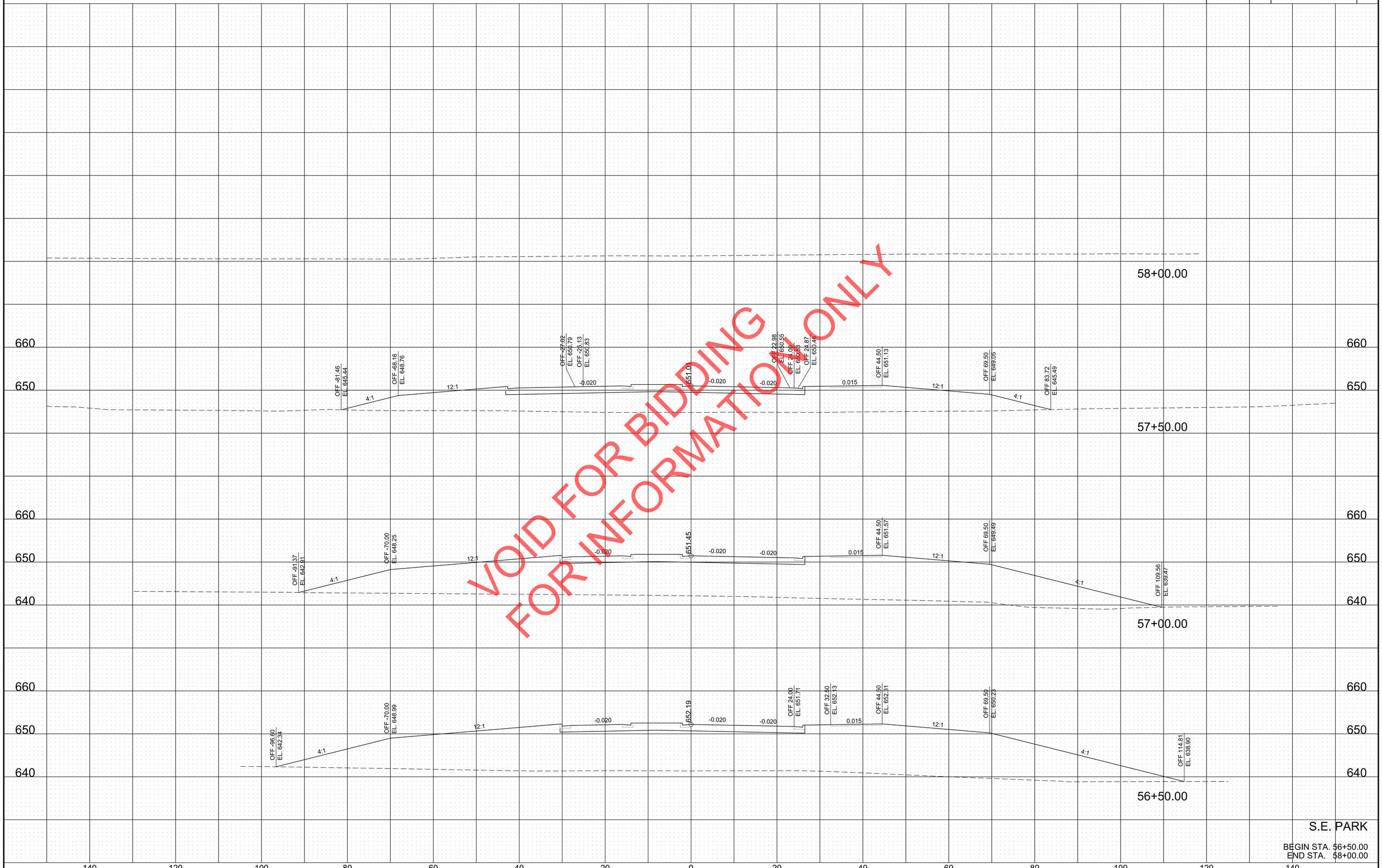

9/21/2020 8:42:29 AM
Y:\Nashville\16019000S\16019033.00\Eng_Docs\Roadway\SE Park Cross Sections_SEPark.sht

TYPE	YEAR	PROJECT NO.	SHEET NO.
CONST.	2020	COF# 2019-0098	B1

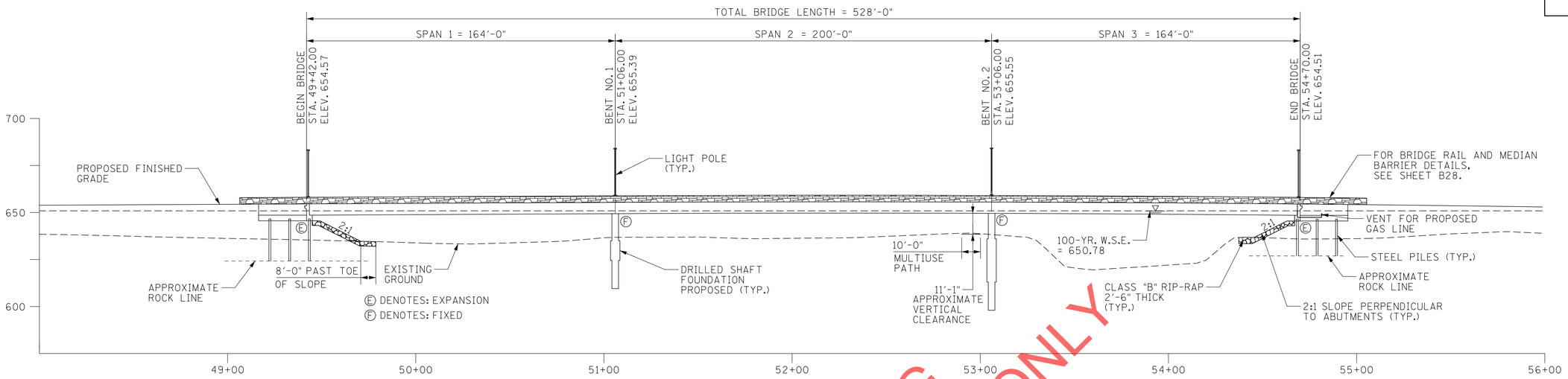

ELEVATION

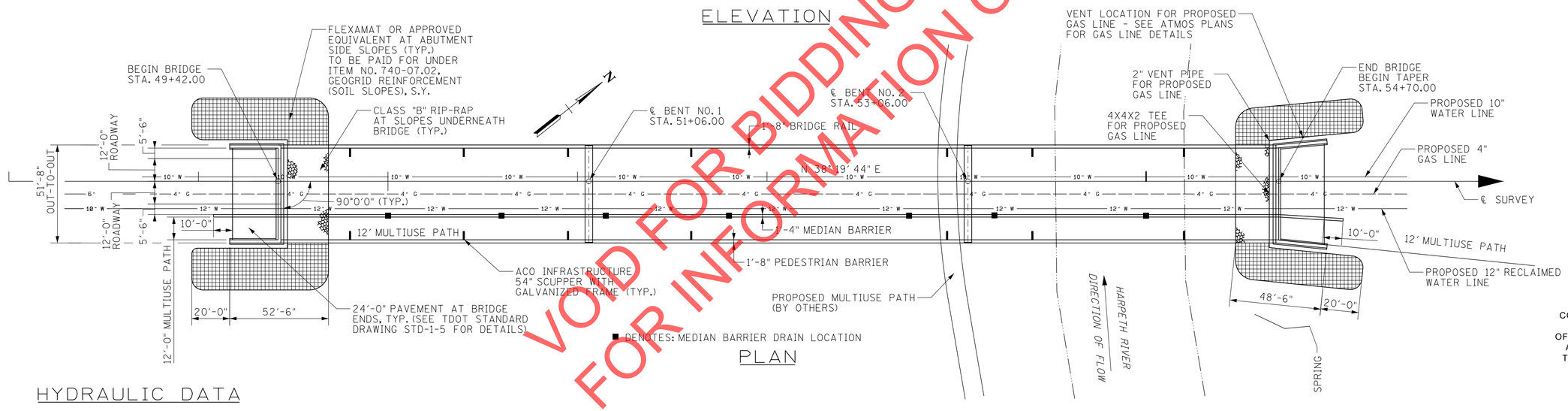

PLAN

VOID FOR BIDDING
FOR INFORMATION ONLY

COORDINATES ARE NAD 83(1983), ARE DATUM ADJUSTED BY THE FACTOR OF 1.000082257 AND TIED TO THE TGRN. ALL ELEVATIONS ARE REFERENCED TO THE NAVD 1988 WITH GEOID 2003.

HYDRAULIC DATA

DRAINAGE AREA: 152.7 SQ. MI.
DESIGN DISCHARGE: 25,240 CFS
WATER AREA PROVIDED BELOW ELEVATION 648.95: 7259.20 SQ. FT.
100 YEAR VELOCITY: 3.10 FPS
100 YEAR BRIDGE BACKWATER: 0.15 FT. @ ELEV. 650.78 FT
ROADWAY OVERTOPPING ELEVATION: 650.93 FT.
DESIGN DISCHARGE (500 YEAR): 33,260 CFS @ 653.16 FT.

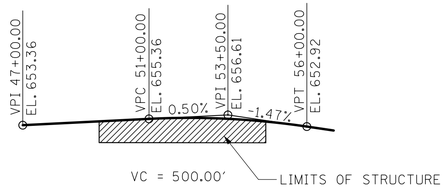

GRADE SKETCH
N.T.S.

LIGHT POLE STATIONS
49+44.33 LT. AND RT.
51+06.00 LT. AND RT.
53+06.00 LT. AND RT.
54+67.67 LT. AND RT.

FOR LIGHT POLE DETAILS AND NOTES, SEE SHEET B28 AND B29

BRIDGE DECK DRAIN LOCATIONS	
MEDIAN DRAINS	SCUPPER LOCATIONS
50+00.00	49+80.00 LT. AND RT.
50+60.00	50+40.00 LT. AND RT.
51+15.00	50+95.00 LT. AND RT.
51+80.00	51+60.00 LT. AND RT.
52+75.00	52+95.00 LT. AND RT.
53+20.00	53+40.00 LT. AND RT.
54+00.00	54+20.00 LT. AND RT.

SEALED BY
MARY K. ROTH
REGISTERED ENGINEER
NO. 123600
STATE OF TENNESSEE
07/31/2020

HISTORIC FRANKLIN TENNESSEE

CITY OF FRANKLIN
ENGINEERING DEPARTMENT

LAYOUT OF BRIDGE

SCALE: 1"= 60'

7/30/2020 4:11:06 PM
Y:\Nashville\16019000S\16019033.00\Eng_Docs\Structures\DGN\Final Plans\SE Park_Bridge Layout.dgn

TYPE	YEAR	PROJECT NO.	SHEET NO.
CONST.	2020	COF# 2019-0098	B2

LIST OF DRAWINGS

	DWG. NO.	LAST REV. DATE
LAYOUT OF BRIDGE	B1	
INDEX OF DRAWINGS	B2	
GENERAL NOTES	B3	
ESTIMATED QUANTITIES	B4	
FOUNDATION DATA	B5	
SUPERSTRUCTURE	B6	
SUPERSTRUCTURE AT BENT	B7	
SUPERSTRUCTURE DETAILS	B8	
SUPERSTRUCTURE DETAILS	B9	
DECK POURING SEQUENCE	B10	
FRAMING PLAN	B11	
STRUCTURAL STEEL DETAILS	B12	
STRUCTURAL STEEL DETAILS	B13	
TYPE I FIELD SPLICE	B14	
TYPE II FIELD SPLICE	B15	
BEARING DETAILS	B16	
ABUTMENT NO. 1	B17	
ABUTMENT NO. 1 DETAILS	B18	
ABUTMENT NO. 1 SECTIONS	B19	
ABUTMENT NO. 1 BLOCKOUT DETAILS	B20	
ABUTMENT NO. 2	B21	
ABUTMENT NO. 2 DETAILS	B22	
ABUTMENT NO. 2 SECTIONS	B23	
ABUTMENT NO. 2 BLOCKOUT DETAILS	B24	
CLOSED DRAINAGE SYSTEM DETAILS	B25	
BENT NO. 1 & NO. 2	B26	
BENT NO. 1 & NO. 2 DETAILS	B27	
BRIDGE RAIL DETAILS	B28	
TRAFFIC RAIL DETAILS	B29	
MEDIAN RAIL DETAILS	B30	
PEDESTRIAN RAIL DETAILS	B31	
UNDERPASS BRIDGE LIGHTING	B32	
UNDERPASS LIGHTING DETAILS	B33	
BRIDGE SIGN DETAILS	B34	
AGGREGATE FOUNDATION SYSTEM LOCATION PLAN	B35	
FINAL FOUNDATION DATA	B36	
BILL OF STEEL	B37	
BILL OF STEEL	B38	

LIST OF STANDARD DRAWINGS

	DWG. NO.	LAST REV. DATE
REINFORCED CONCRETE PAVEMENT AT BRIDGE ENDS	STD-1-5	03-26-2014
BRIDGE END DRAIN DETAILS 2'X8'-7" & 4'X8'-7" WITH PAVEMENT AT BRIDGE ENDS	STD-1-6	04-28-1997
BRIDGE END DRAIN DETAILS 2'X8'-7" WITH PAVEMENT AT BRIDGE ENDS	STD-1-8	05-01-1995
STRIPSEAL EXPANSION JOINT NEW CONSTRUCTION	STD-3-1	11-01-2010
STRIPSEAL EXPANSION JOINT NEW CONSTRUCTION	STD-3-2	11-01-2010
STD. PRECAST PRESTRESSED DECK PANELS GENERAL DETAILS	STD-4-1	04-08-2005
STD. PRECAST PRESTRESSED DECK PANELS DESIGN CRITERIA	STD-4-2	04-08-2005
STD. PRECAST PRESTRESSED BRIDGE DECK PANELS DENERAL DETAILS	STD-4-3	03-02-2002
STD. PRECAST PRESTRESSED BRIDGE DECK PANELS CONSTRUCTION DETAILS	STD-4-4	06-10-1996
REINFORCING BAR SUPPORT DETAILS FOR CONCRETE SLABS	STD-9-1	10-07-2008
MISCELLANEOUS ABUTMENT AND DRAINAGE DETAILS	STD-10-1	04-08-2005

LIST OF SPECIAL PROVISIONS

	DWG. NO.	LAST REV. DATE
DRILLED SHAFT SPECIFICATIONS	625	05-18-2017
AGGREGATE FOUNDATION SYSTEM	626	08-21-2017

UTILITY OWNERS

MIDDLE TN ELECTRIC MEMBERSHIP CORP.
2156 EDWARD CURD LANE
FRANKLIN, TN 34064
ATTN: DARRICK LYNCH
PH (615) 595-4669
EMAIL: DERRICK.LYNCH@MTEMC.COM

COMCAST CABLE COMMUNICATIONS
660 MAINSTREAM DRIVE
NASHVILLE, TN 37228
ATTN: RUSTY HOLLOWAY
PH (615) 244-7462 EXT. 1115471
EMAIL: RUSSELL_HOLLOWAY@CABLE.COMCAST.COM

ATMOS ENERGY - GAS
810 CRESCENT CENTRE DRIVE
SUITE 600
FRANKLIN, TN 37067
ATTN: RYAN BATES
PH (615) 771-8311
EMAIL: RYAN.BATES@ATMOSENERGY.COM

LEVEL 3 COMMUNICATIONS, INC.
105A WILHOIT STREET
CRAWFORDSVILLE, IN 47933
ATTN: TIM HILL
PH (704) 733-3204
EMAIL: TIM.W.HILL@CENTURYLINK.COM

AT&T - OUTSIDE PLAN ENGINEERING
333 COMMERCE STREET
NASHVILLE, TN 37201
ATTN: LEE KORNEGAY
PH (615) 214-7318
EMAIL: KK4096@ATT.COM

CITY OF FRANKLIN FIBER OPTICS
109 3RD AVENUE SOUTH
FRANKLIN, TN 37064
ATTN: MIKE PROCTOR
PH (615) 289-1036
EMAIL: MIKEP@FRANKLINTN.GOV

CITY OF FRANLKIN - WATER MANAGEMENT DEPARTMENT
124 LUMBER DRIVE
FRANKLIN, TN 37064
ATTN: MICHELLE HATCHER
PH (615) 794-4554
EMAIL: MICHELLE.HATCHER@FRANKLINTN.GOV

MILCROFTON UTILITY DISTRICT
6333 ARNO ROAD
FRANKLIN, TN 37064
ATTN: MIKE JONES
EMAIL: MIKE@MILCROFTON.COM

VOID FOR BIDDING
FOR INFORMATION ONLY

COORDINATES ARE NAD 83(1983), ARE DATUM ADJUSTED BY THE FACTOR OF 1.000082257 AND TIED TO THE TGRN. ALL ELEVATIONS ARE REFERENCED TO THE NAVD 1988 WITH GEOID 2003.

SEALED BY

MARY K. ROTH
REGISTERED ENGINEER
No. 123609
STATE OF TENNESSEE
07/31/2020

HISTORIC FRANKLIN TENNESSEE

CITY OF FRANKLIN
ENGINEERING DEPARTMENT

INDEX OF DRAWINGS

7/30/2020 4:11:09 PM
Y:\Nashville\16019000S\16019033.00\Eng_Docs\Structures\DGN\Final Plans\SE Park_Index.dgn

TYPE	YEAR	PROJECT NO.	SHEET NO.
CONST.	2020	COF# 2019-0098	B3

GENERAL NOTES

SPECIFICATIONS & LOADING

(1) **SPECIFICATIONS**: STANDARD ROAD AND BRIDGE SPECIFICATIONS OF THE TENNESSEE DEPARTMENT OF TRANSPORTATION (JANUARY 1, 2015 EDITION).

(2) **DESIGN SPECIFICATIONS:** 8TH EDITION (2017) AASHTO LRFD BRIDGE DESIGN SPECIFICATIONS WITH INTERIMS, AND THE 2ND EDITION (2011) AASHTO GUIDE SPECIFICATIONS FOR LRFD SEISMIC BRIDGE DESIGN WITH INTERIMS.

(3) **LOADING**:
- A. HL-93 LIVE LOADING
- B. SEISMIC CATEGORY SITE CLASS "C" WITH A_S= 0.103, S_{DS}=0.249, S_{D1}=0.132, (1000 YEAR RETURN PERIOD).
- C. DEAD LOAD INCLUDES 35 LB/SQ. FT. FOR FUTURE WEARING SURFACE.

CONCRETE, REINFORCING & FORMING

(4) **CONCRETE:** TO BE CLASS "A" f'c = 3000 PSI EXCEPT AS NOTED OTHERWISE. CONCRETE FOR BENTS TO BE CLASS "A" f'c = 4000 PSI.

(5) **BRIDGE DECKS:** CLASS "D" CONCRETE FOR BRIDGE DECKS SHALL BE IN ACCORDANCE WITH SECTION 604 OF THE STANDARD SPECIFICATIONS.

(6) **BRIDGE DECK SURFACE FINISH**: TO BE IN ACCORDANCE WITH METHOD 1 IN ARTICLE 604.22 OF THE STANDARD SPECIFICATIONS.

(7) **BRIDGE DECK FORMS**: BRIDGE DECK FORMS FOR CONCRETE DECKS SHALL BE CONSTRUCTED USING EITHER REMOVABLE FORMS OR PERMANENT FORMS. PERMANENT FORMS MAY BE EITHER REMAIN-IN-PLACE STEEL OR PRECAST, PRESTRESSED CONCRETE PANELS. IN EITHER CASE, FORMS SHALL BE ATTACHED BY MEANS OTHER THAN WELDING TO MAIN STRUCTURAL MEMBERS OR REINFORCING STEEL. TEMPORARY ERECTION DIAPHRAGMS MUST BE USED AT THE ENDS OF PRECAST CONCRETE GIRDERS WHERE END DIAPHRAGMS, SUPPORT DIAPHRAGMS, OR ABUTMENT ENDWALLS ARE TO BE POURED CONCURRENTLY WITH THE DECK AND SHALL BE PROVIDED ELSEWHERE IN ACCORDANCE WITH THE STANDARD SPECIFICATIONS TO PREVENT GIRDER ROTATION. SEE STANDARD DRAWINGS STD-4-1 THRU 4, [STD-14-1, 2, OR 3], AND ARTICLE 604.05 OF THE STANDARD SPECIFICATIONS.

(8) **REINFORCING STEEL**: SHALL BE ASTM A615 GRADE 60 UNLESS NOTED OTHERWISE. SEE SECTION 604 AND 907 OF THE STANDARD SPECIFICATIONS.

FOUNDATION ELEMENTS

(9) **FOUNDATION PREPARATION**: SEE SECTION 204 OF THE STANDARD SPECIFICATIONS. IF IT IS DETERMINED THAT COFFERDAMS ARE REQUIRED, THEY SHALL BE IN ACCORDANCE WITH SECTION 204.09 OF THE STANDARD SPECIFICATIONS.

(10) **ABUTMENTS ON FILL**: THE FILLS AT THE ENDS OF THE BRIDGE SHALL BE IN PLACE AND THOROUGHLY COMPACTED BEFORE ANY ABUTMENT PILES ARE DRIVEN.

(11) **END-BEARING STEEL PILES**: TO BE HP10X42 DRIVEN TO REFUSAL ON ROCK OR A MINIMUM BEARING OF 76 TONS FOR THE ABUTMENTS. ALL PILES SHALL BE ASTM A709 GRADE 50 STEEL.

(12) **PILE TIPS:** PILES SHALL BE EQUIPPED WITH CAST STEEL POINTS. ALSO, SEE STANDARD DRAWING STD-5-1 FOR ADDITIONAL NOTES.

(13) **DRILLED SHAFTS**: SEE SPECIAL PROVISION 625 REGARDING DRILLED SHAFT SPECIFICATIONS.

STEEL SUPERSTRUCTURES

(14) **WELDING**: ANSI/AASHTO/D1.5 – CURRENT EDITION BRIDGE WELDING CODE. SEE SECTION 602 OF THE STANDARD SPECIFICATIONS AND NOTES ON DRAWING NO. B13.

(15) **RADIOGRAPHIC, ULTRASONIC, AND MAGNETIC INSPECTION**: SEE SECTION 602 OF THE STANDARD SPECIFICATIONS.

(16) **STEEL STRUCTURES**: SEE TENNESSEE STANDARD SPECIFICATIONS SECTION 602 AND NOTES ON DRAWING NO. B11.

(17) **PROTECTION OF SUBSTRUCTURES:** SINCE THIS BRIDGE UTILIZES WEATHERING STEEL, THE CONTRACTOR MUST TAKE SPECIAL PRECAUTIONS TO PREVENT STAINING OF PIERS AND ABUTMENTS. PRIOR TO THE ERECTION OF ANY STEEL, THE TOPS AND SIDES OF THE COMPLETED SUBSTRUCTURES SHALL BE PROTECTED FROM STAINING BY WRAPPING WITH TRANSLUCENT, REINFORCED, HIGH DENSITY, TWO-PLY, CROSS-LAMINATED POLYETHYLENE.

IN LIEU OF THIS PROTECTION, THE CONTRACTOR MAY ELECT TO THOROUGHLY CLEAN THE CONCRETE OF RUST STAINING BY SANDBLASTING OR OTHER APPROVED METHODS, PRIOR TO APPLYING A TEXTURE-COATED FINISH. NO SEALANT TYPE MATERIALS SHALL BE APPLIED WHICH ARE INCOMPATIBLE WITH THE TEXTURE-COATED FINISH UNLESS THEY CAN BE THOROUGHLY REMOVED PRIOR TO APPLYING THE FINISH. TEXTURE-COATING OF THE SUBSTRUCTURE SHOULD BE DELAYED UNTIL AFTER THE DECK IS COMPLETED.

AFTER A SUBSTRUCTURE HAS RECEIVED ITS FINAL FINISH, THE TOP AND SIDES SHALL BE PROTECTED FROM STAINING BY WRAPPING WITH REINFORCED POLYETHYLENE, WHICH, IF BEING REUSED, SHALL BE IN GOOD CONDITION AND FREE FROM HOLES AND TEARS. IT SHALL BE THE CONTRACTOR'S RESPONSIBILITY TO PROTECT THE SUBSTRUCTURES FROM STAINING FOR THE DURATION OF THE CONTRACT. ANY CORRECTIVE TEXTURE-COATING SHALL BE AT HIS EXPENSE. COST TO BE INCLUDED IN THE UNIT PRICE BID FOR OTHER ITEMS.

(18) **BLAST CLEANING**: THE FASCIA GIRDERS AND ALL FAYING SURFACES OF FIELD SPLICES OF ALL GIRDERS SHALL BE BLAST CLEANED IN ACCORDANCE WITH THE STEEL STRUCTURES PAINTING COUNCIL SURFACE PREPARATION SPECIFICATIONS "NO. 6 COMMERCIAL BLAST CLEANING" SSPC-SP 6. PRIOR TO BOLTING, ANY LOOSE RUST ON THE FAYING SURFACES SHALL BE REMOVED.

(19) **FINAL APPEARANCE**: PRIOR TO FINAL ACCEPTANCE, ALL STRUCTURAL STEEL SHALL BE FREE OF GREASE, OIL, CHALK MARKS, PAINT, CONCRETE SPATTER AND SIMILAR SOILAGE. DEPENDING ON THE LOCATION, WITH RESPECT TO VIEW AND SEVERITY OF THE FORE-GOING SOILAGE, THE STRUCTURAL STEEL SHALL BE CLEANED UNDER THE PROVISIONS OF ONE OF THE FOLLOWING STEEL STRUCTURES PAINTING COUNCIL SURFACE PREPARATION SPECIFICATIONS;
- NO. 1 SOLVENT CLEANING - SSPC-SP 1
- NO. 2 HAND CLEANING - SSPC-SP 2
- NO. 3 POWER TOOL CLEANING - SSPC-SP 3
- NO. 7 BRUSH-OFF BLAST CLEANING - SSPC-SP 7

(20) **WEATHERING BOLTS**: ALL BOLTS SHALL BE ASTM F3125 GRADE A325, TYPE 3 UNLESS NOTED OTHERWISE. ALL BOLTS, NUTS, AND WASHERS SHALL HAVE THE SAME WEATHERING CHARACTERISTICS AS THE STRUCTURAL STEEL USED. IN LIEU OF USING DIRECT TENSION INDICATORS (DTI'S), ALL BOLTS SHALL BE INSTALLED BY EITHER TURN-OF-NUT TIGHTENING OR CALIBRATED WRENCH TIGHTENING IN ACCORDANCE WITH THE AASHTO LRFD BRIDGE CONSTRUCTION SPECIFICATIONS, CURRENT EDITION.

(21) **PAINTING GIRDERS BELOW EXPANSION JOINTS**: WEATHERING STEEL GIRDERS BELOW EXPANSION JOINTS SHALL BE PAINTED FOR A MINIMUM DISTANCE OF 1 ½ TIMES THE DEPTH (1.5D) OF THE GIRDER ON EITHER SIDE OF THE JOINT. THE COLOR OF THE TOP COAT SHALL BE BROWN, AMS-STD-595A, COLOR NO. 30059.

(22) **PAINT**: INORGANIC ZINC WITH URETHANE FINISH – BROWN TOP COAT CONFORMING TO FEDERAL STANDARD 595C (30059).

(23) BEARING DEVICES SHALL BE IN ACCORDANCE WITH THE DETAILS AND DIMENSIONS SHOWN ON SHEET B16.

(24) ALL WEATHERING STEEL SHALL HAVE ATMOSPHERIC CORROSION RESISTANCE EQUAL TO OR BETTER THAN TWO TIMES THAT OF CARBON STRUCTURAL STEEL WITH COPPER.

MISCELLANEOUS GENERAL NOTES

(25) **SPECIAL NOTE FOR UTILITIES**: IT IS INTENDED THAT THE COST OF ALL MATERIALS NECESSARY FOR THE INSTALLATION OF ALL UTILITIES ON THE BRIDGE, INCLUDING HANGER ASSEMBLIES, CASINGS, HARDWARE, AND INSULATION, SHALL BE PAID FOR BY THE CITY OF FRANKLIN AS PART OF THIS CONTRACT. THE COST OF EQUIPMENT AND LABOR FOR INSTLLATION OF ALL UTILITIES SHALL BE PAID FOR UNDER ITEM NO. 795-13.04, BRIDGE HANGER SYSTEM, LS. CONTRACTOR SHALL COORDINATE INSTALLATION OF UTILITIES ON THE BRIDGE WITH THE CITY OF FRANKLIN WATER DEPARTMENT FOR WATER LINES AND ATMOS ENERGY FOR GAS LINE.

(26) **SHOP DRAWINGS:** SEE SECTION 105.02 OF THE STANDARD SPECIFICATIONS.

(27) **NOTE:** THE CONTRACTOR SHALL PROVIDE 100% CONVENTIONAL FALL PROTECTION FOR WORKERS INSTALLING DECKING ABOVE 15 FEET.

(28) **BRIDGE RAIL SYSTEM**: BUILD BRIDGE RAILINGS ACCORDING SHEETS B28 THROUGH B31. THE RAILING SHALL BE FORMED AND CAST PLUMB, NOT PERPENDICULAR TO THE SLAB. THE DIMENSIONS AT THE TRAFFIC FACE SHALL BE KEPT CONSTANT, WITH VARIATION DUE TO CROSS-SLOPE ACCOMMODATED AT THE REAR FACE.

(29) **NOTE:** THE REINFORCED CONCRETE MEDIAN BARRIER RAIL SHALL BE CONSTRUCTED IN ACCORDANCE WITH THE DETAILS SHOWN ON DRAWING B28 THRU B31 AND SHALL BE GIVEN AN APPLIED TEXTURE FINISH. THE COLOR OF THE FINISH SHALL BE MOUNTAIN GRAY, COLOR NO. 36440. THE COST OF THE FINISH SHALL BE INCLUDED IN THE PRICE BID FOR APPLIED TEXTURE FINISH (NEW STRUCTURES), ITEM NO. 604-04.01, S.Y. PRECAST BRIDGE DECK PANELS ARE NOT PERMITTED IN THE BAY SUPPORTING THE MEDIAN BARRIER RAIL.

(30) **CONCRETE SEALER:** CONCRETE SEALER SHALL BE APPLIED TO SUBSTRUCTURES COINCIDING WITH EXPANSION JOINT LOCATIONS BEFORE PLACEMENT OF BEARING DEVICES AND APPLYING TEXTURE-COATING. CONCRETE SEALER IS TO BE APPLIED AT ABUTMENTS ONLY.

CONCRETE SHALL BE CLEAN AND DRY BEFORE APPLYING THE CONCRETE SEALER, AND THE THICKNESS OF THE SEALER SHALL BE AS RECOMMENDED BY THE SEALANT MANUFACTURER. ACCEPTABLE CONCRETE SEALERS ARE INCLUDED IN THE QUALIFIED PRODUCTS LIST FOR NON-PENETRATING CONCRETE SEALERS MAINTAINED BY THE DIVISION OF MATERIALS AND TESTS. THE SEALER SHALL BE CLEAR OR SIMILAR TO THE COLOR OF EXISTING CONCRETE SURFACES TO BE SEALED. THE COST OF THE SEALER, COMPLETE AND IN PLACE, SHALL BE INCLUDED IN THE UNIT PRICE BID FOR THE EXPANSION DEVICE AT EACH SUBSTRUCTURE.

(31) **RIP-RAP:** MACHINED RIP-RAP SHALL BE CLASS "B" IN ACCORDANCE WITH SECTION 709 OF THE STANDARD SPECIFICATIONS AND SHALL BE MEASURED AND PAID FOR UNDER ROADWAY ITEM NO 709-05.08.

(32) **VALUE ENGINEERING ALTERNATE BRIDGE DESIGN CRITERIA:** ALTERNATE BRIDGE DESIGN PROPOSALS MAY NOT DIMINISH THE FUNCTIONAL OR STRUCTURAL EQUIVALENCY OF THE BRIDGE AND MUST MEET OR EXCEED THE CAPACITIES OF THE CONTRACT PLANS STRUCTURE AT ALL LIMIT STATES IN AASHTO TABLE 3.4.1-1. ADDITIONALLY, THE WATERWAY OPENING AND FLOOD CLEARANCES MAY NOT BE REDUCED. FOR GRADE SEPARATIONS, THE HORIZONTAL CLEARANCES MAY NOT BE REDUCED, NOR MAY THE VERTICAL CLEARANCES BE LESS THAN THE MINIMUM ACCEPTABLE FOR THE TYPE FACILITY CROSSED.

(33) **FINISHING CONCRETE SURFACES:** CONCRETE FINISHING SHALL BE IN ACCORDANCE WITH SECTION 604.21 OF THE STANDARD SPECIFICATIONS. A CLASS I FINISH FOLLOWED BY AN APPLIED TEXTURE FINISH SHALL BE USED IN LIEU OF A CLASS II FINISH. NO TEXTURE FINISH SHALL BE APPLIED PRIOR TO COMPLETION OF PAVING AND HAULING OPERATIONS AT THE BRIDGE SITE. THE APPLIED TEXTURE FINISH SHALL BE MEASURED AND PAID FOR UNDER ITEM NO. 604-04.01

(34) **NOTE:** IN ADDITION TO THE SURFACES SHOWN IN THE APPLIED TEXTURE FINISH SKETCH, ALL EXPOSED SURFACES OF THE [WINGWALLS, ABUTMENT BEAMS, APRON WALLS, BENTS, AND EXTERIOR PORTIONS OF THE ENDWALLS] SHALL RECEIVE AN APPLIED TEXTURE FINISH, (GREY, AMS-STD-595A, COLOR NO. 36440).

(35) **NOTE:** GRAFFITI PROTECTION SYSTEM SHALL CONSIST OF SHERWIN WILLIAMS ANTI-GRAFFITI COATING B97C00150 OR AN APPROVED EQUIVALENT SUBMITTED TO AND APPROVED BY THE CITY OF FRANKLIN ENGINEERING DEPARTMENT. GRAFFITI PROTECTION SYSTEM SHALL BE APPLIED TO ALL VISIBLE SURFACES OF THE BENTS.

(36) **NOTE:** CONTRACTOR SHALL SUBMIT GIRDER ERECTION PLAN TO BE APPROVED BY THE ENGINEER.

NOT FOR BIDDING
FOR INFORMATION ONLY

COORDINATES ARE NAD 83(1983), ARE DATUM ADJUSTED BY THE FACTOR OF 1.000082257 AND TIED TO THE TGRN. ALL ELEVATIONS ARE REFERENCED TO THE NAVD 1988 WITH GEOID 2003.

SEALED BY

MARY K. ROTH
REGISTERED ENGINEER
No. 123699
STATE OF TENNESSEE
07/31/2020

HISTORIC FRANKLIN TENNESSEE

CITY OF FRANKLIN
ENGINEERING DEPARTMENT

GENERAL NOTES

TYPE	YEAR	PROJECT NO.	SHEET NO.
CONST.	2020	COF# 2019-0098	B4

ESTIMATED BRIDGE QUANTITIES

	ITEM NO.	DESCRIPTION	UNIT	TOTAL	SUPERSTRUCTURE	ABUT. NO. 1	BENT 1	BENT 2	ABUT. NO. 2
	204-02.01	DRY EXCAVATION (BRIDGES)	C.Y.	150	-	75	-	-	75
(8)	303-01.03	GRANULAR BACKFILL (BRIDGES)	TON	56	-	28	-	-	28
	406-03.02	STEEL BAR REINFORCEMENT (BRIDGES)	LB	69,515	-	7,808	24,384	29,553	7,770
(3)	602-04.01	STEEL STRUCTURES	LS	1	-	-	-	-	-
	604-02.03	EPOXY COATED REINFORCING STEEL	LB	264,149	256,385	3,882	-	-	3,882
	604-03.01	CLASS 'A' CONCRETE	C.Y.	247	-	78	46	45	78
(1)	604-03.04	PAVEMENT AT BRIDGE ENDS	S.Y.	276	-	138	-	-	138
	604-03.09	CLASS 'D' CONCRETE (BRIDGE DECK)	C.Y.	738	738	-	-	-	-
	604-04.01	APPLIED TEXTURE FINISH (NEW STRUCTURES)	S.Y.	2,302	1,865	100	119	118	100
(12)	604-04.10	GRAFFITI PROTECTION SYSTEM	S.Y.	237	-	-	119	118	-
(13)	604-10.89	MISCELLANEOUS BRIDGE ITEMS (TEMPORARY BRIDGE)	LS	1	-	-	-	-	-
(7)(2)	604-11.01	EXPANSION DEVICE (EACH ABUTMENT, 4" MOVEMENT)	L.F.	104	-	52	-	-	52
	606-02.03	STEEL PILES (10 INCH)	L.F.	905	-	515	-	-	390
(9)	606-02.06	PILE TIPS (STEEL PILES, 10 INCH)	EACH	36	-	18	-	-	18
(14)	610-10.04	DRAINAGE SYSTEM (BRIDGE DECK) (CLOSED SYSTEM)	LS	1	-	-	-	-	-
(4)	610-10.45	DECK DRAINS (54" ACO GALVANIZED SCUPPER)	EACH	14	-	-	-	-	-
	620-03.10	TRAFFIC RAIL	L.F.	630	-	-	-	-	-
	620-03.11	MEDIAN BARRIER RAIL	L.F.	596	-	-	-	-	-
	620-03.12	PEDESTRIAN RAIL	L.F.	528	-	-	-	-	-
(11)	625-02.01	DRILLED SHAFT - SOIL (5'-0")	V.F.	101	-	-	32	69	-
(11)	625-02.13	DRILLED SHAFT - ROCK (3'-6")	V.F.	90	-	-	45	45	-
	625-02.25	DRILLED SHAFT CASING - PERMANENT (5'-0" INSIDE DIA. STEEL)	V.F.	101	-	-	32	69	-
(10)	625-02.40	DRILLED SHAFT (SH-SCC) CONCRETE	C.Y.	106	-	-	39	67	-
(19)	625-02.43	CONCRETE CORING	V.F.	203	-	-	80	123	-
(21)	626-01.01	AGGREGATE FOUNDATION SYSTEMS	LS	1	-	-	-	-	-
(18)	709-05.08	MACHINED RIP-RAP (CLASS B)	TON	492	-	-	-	-	-
(5)	710-09.01	6" PERF. PIPE WITH VERTICAL DRAIN SYSTEM	L.F.	192	-	96	-	-	96
	710-09.02	6" PIPE UNDERDRAIN	L.F.	88	-	44	-	-	44
(6)	714-01.01	STRUCTURAL LIGHTING	LS	1	-	-	-	-	-
(22)	713-16.20	SIGNS (NOTICE/NO CLIMBING)	EACH	6	-	-	-	-	-
(22)	713-16.22	SIGNS (SOUTHEAST PARK 93.3)	EACH	2	-	-	-	-	-
(17)	740-07.02	GEOGRID REINFORCEMENT (SOIL SLOPES)	S.Y.	725	-	-	-	-	-
(20)	795-13.04	BRIDGE HANGER SYSTEM	LS	1	-	-	-	-	-
(15)	908-21.01	BEARINGS (ABUTMENT NOS. 1 & 2)	EACH	12	-	6	-	-	6
(16)	908-21.02	BEARINGS (BENT NOS. 1 & 2)	EACH	12	-	-	6	6	-

FOOTNOTES

(1) NOTE: PRIOR TO CONSTRUCTION OF THE PAVEMENT AT BRIDGE ENDS, THE CONTRACTOR SHALL SUBMIT A PROPOSED BILL OF STEEL TO THE ENGINEER FOR APPROVAL.

(2) NOTE: THE UNIT PRICE BID FOR ROADWAY EXPANSION DEVICES TO INCLUDE THE COST OF 134 S.Y. OF CONCRETE SEALER REQUIRED. SEE GENERAL NOTES FOR DESCRIPTION OF CONCRETE SEALER.

(3) NOTE: LUMP SUM: THE TOTAL ESTIMATED WEIGHT OF 1,126,326 LBS. OF STRUCTURAL STEEL INCLUDES GIRDERS, FIELD SPLICES, CROSS FRAMES, STIFFENERS, SHEAR CONNECTORS, TAB CONNECTION PLATES, BOLTS, ETC. ALSO SEE THE STANDARD SPECIFICATIONS SECTIONS 602.49 AND 602.50.

(4) COST INCLUDES ALL LABOR AND MATERIALS ASSOCIATED WITH THE INSTALLATION OF FOURTEEN (14) ACO 54" GALVANIZED SCUPPERS AT LOCATIONS DESIGNATED ON SHEET B1.

(5) COST OF POLYETHYLENE SHEETING AND ALL MISCELLANEOUS ITEMS NECESSARY FOR INSTALLATION TO BE INCLUDED IN THE UNIT PRICE BID FOR PERFORATED PIPE.

(6) NOTE: LUMP SUM FOR STRUCTURAL LIGHTING INCLUDES COST OF ALL LABOR AND MATERIALS FOR THE INSTALLATION AS FOLLOWS:
UNDERPASS LIGHTING:
714-04.01 CONDUIT (STRUCTURES - 1" RGS), 50 L.F. (INCLUDES CONDUIT EXPANSION COUPLING)
714-05.05 PULL BOXES (EMBEDDED IN STRUCTURE, STAINLESS STEEL, 12"X12"X6"), 2 EACH
714-09.09 LUMINAIRE (UNDERPASS LED 30W), 2 EACH
714-72.02 FLEXIBLE PVC CONDUIT 1 IN SCH 40, 12 L.F.
725-20.53 CABLE (1/C #10 AWG.), 186 L.F.
BRIDGE LIGHTING ON TOP OF RAIL POSTS: 8 SQUARE ALUMINUM LIGHT POSTS 25' HEIGHT, 8 LED FIXTURES, 32 ANCHOR BOLTS, 3320 L.F. OF 3" DIA. PVC CONDUIT, 6 EACH OF PULL BOXES ATTACHED TO EXTERIOR OF STRUCTURE
SEE SHEETS B28, B32 & B33 FOR LIGHTING DETAILS.

(7) NOTE: THE EXPANSION JOINTS AT THE ABUTMENTS SHALL BE IN ACCORDANCE WITH SECTION 623.03 OF THE STANDARD SPECIFICATIONS. THE TOTAL REQUIRED MOVEMENT IS 4 INCHES. SHOP DRAWINGS SHALL BE SUBMITTED TO THE ENGINEER OF STRUCTURES FOR APPROVAL.

(8) GRANULAR BACKFILL SHALL BE CLASS "A" GRADING "D" MATERIAL. SEE STANDARD DRAWING NO. STD-10-1.

(9) NOTE: THE UNIT PRICE BID FOR THE CAST STEEL POINTS SHALL INCLUDE FURNISHING AND INSTALLATION TO THE PILES.

(10) DRILLED SHAFT CONCRETE SHALL INCLUDE ALL COST FOR MATERIALS, CONCRETE PLACEMENT, AND INSTALLATION OF STEEL PIPES FOR SONIC LOGGING TESTING IN ACCORDANCE WITH TDOT SPECIAL PROVISION 625. SONIC LOGGING TESTING TO BE PERFORMED AT EACH SHAFT LOCATION.

(11) NOTE: THE COST OF THE FOLLOWING ITEMS IS TO BE INCLUDED IN THE UNIT PRICE BID FOR ITEMS 625-02.01 AND 625-02.13: DRILLING, CLEANING AND INSPECTING THE SHAFT; TELEVISION CAMERA INSPECTION OF THE SHAFT WALLS AND ROCK SOCKET SURFACES; INSTALLATION OF ALL CASING; SETTING OF ALL SHAFT REINFORCING; TEMPORARY CASING.

(12) NOTE: COST OF GRAFFITI PROTECTION SYSTEM TO INCLUDE ANTI-GRAFFITI COATING APPLIED TO ALL VISIBLE SURFACES OF THE BENTS. GRAFFITI PROTECTION SYSTEM SHALL CONSIST OF SHERWIN WILLIAMS ANTI-GRAFFITI COATING B97C00150 OR AN APPROVED EQUIVALENT SUBMITTED TO AND APPROVED BY THE CITY OF FRANKLIN ENGINEERING DEPARTMENT.

(13) NOTE: SEE ROADWAY SHEET 7E FOR TEMPORARY BRIDGE DETAILS AND NOTES.

(14) NOTE: INCLUDES COST OF ALL LABOR AND MATERIALS ASSOCIATED WITH THE INSTALLATION OF CLOSED DRAINAGE SYSTEM AS SHOWN ON SHEET B25.

(15) NOTE: INCLUDES COST OF ALL LABOR AND MATERIALS ASSOCIATED WITH THE INSTALLATION OF BEARING ASSEMBLY AT ABUTMENTS, INCLUDING STEEL PLATES, ANCHOR RODS, WASHERS, ELASTOMERIC BEARING PAD, RUBBER BONDING CEMENT, AND GALVANIZING AS SHOWN ON SHEET B16.

(16) NOTE: INCLUDES COST OF ALL LABOR AND MATERIALS ASSOCIATED WITH THE INSTALLATION OF BEARING ASSEMBLY AT BENTS, INCLUDING STEEL PLATES, ANCHOR RODS, WASHERS, ELASTOMERIC BEARING PAD, AND GALVANIZING AS SHOWN ON SHEET B16.

(17) NOTE: INCLUDES COST OF ALL LABOR AND MATERIALS ASSOCIATED WITH THE INSTALLATION OF FLEXAMAT SOIL SLOPE PROTECTION ON SIDE SLOPES AT BRIDGE ABUTMENTS AS SHOWN ON SHEET B1.

(18) NOTE: INCLUDES COST OF ALL LABOR AND MATERIALS ASSOCIATED WITH THE INSTALLATION OF CLASS B RIP-RAP ON THE SLOPES AT ABUTMENTS UNDER THE BRIDGE AS SHOWN ON SHEET B1.

(19) NOTE: QUANTITY BASED ON ONE (1) CORE PER SHAFT. SEE TDOT SPECIAL PROVISION 625 FOR ADDITIONAL INFORMATION.

(20) NOTE: INCLUDES COST OF LABOR AND MATERIALS NECESSARY TO INSTALL ALL UTILITY HANGER ASSEMBLIES FOR 12" WATER LINE, 10" WATER LINE, AND 4" GAS LINE ON THE BRIDGE AND FLEX-900 OR APPROVED EQUAL FLEXIBLE BALL JOINTS AS INDICATED IN THE UTILITY PLANS.

(21) NOTE: INCLUDES COST OF ALL LABOR AND MATERIALS ASSOCIATED WITH THE DESIGN, INSTALLATION, AND TESTING OF AGGREGATE FOUNDATION SYSTEM WITHIN LIMITS SHOWN ON SHEET B35. FOR ADDITIONAL DETAILS, SEE TDOT SPECIAL PROVISION 626.

(22) NOTE: INCLUDES COST OF ALL LABOR AND MATERIALS ASSOCIATED WITH THE INSTALLATION OF SIGNS AS SHOWN ON SHEET B34. RIVER MILE MARKER SIGNS (SOUTHEAST PARK 93.3) SHALL BE MANUFACTURED AND PAID FOR BY THE CITY OF FRANKLIN. COST OF LABOR AND INSTALLATION FOR RIVER MILE MARKER SIGNS TO BE PAID FOR UNDER ITEM NO. 713-16.22.

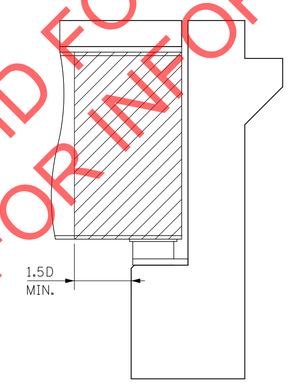

LIMITS OF PAINTING FOR GIRDERS AT ABUTMENTS

THE CREVICE BETWEEN THE EMBEDDED STEEL AND CONCRETE AT ABUTMENT SHALL BE SEALED BY CAULKING WITH SILICONE CAULK.

REFER TO SHEET B3 FOR GENERAL NOTES REGARDING PAINTING OF GIRDERS BELOW EXPANSION JOINTS.

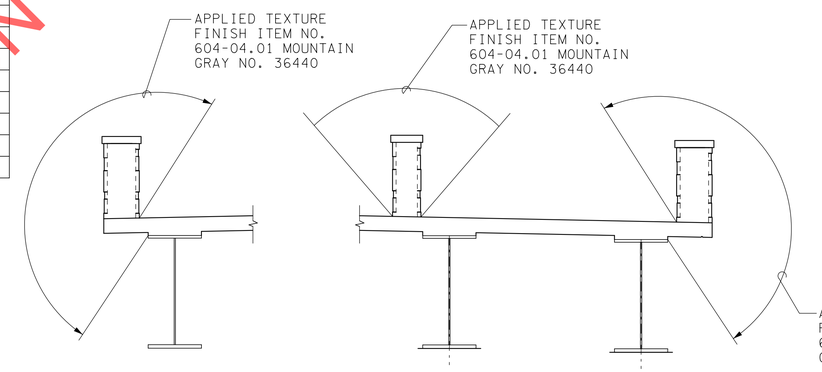

NOTE: COST OF TEXTURE COATING SHALL BE INCLUDED IN ITEM NO. 604-04.01, AND INCLUDES CONCRETE WINGWALLS, BENTS, ALL EXPOSED SURFACES OF ABUTMENTS, LIMITS OF SUPERSTRUCTURE AS SHOWN IN APPLIED TEXTURE FINISH SKETCH, AND SURFACES OF CONCRETE BASE ALONG BOTTOM OF PEDESTRIAN RAIL.

NOTE: BEFORE APPLYING ANY TEXTURE FINISH, ALL SURFACES SHALL BE COMPLETELY CLEANED OF ALL DEBRIS AND FOREIGN MATERIALS.

NOTE: THE CONTRACTOR SHALL USE CONTAINMENT SCREENS OR OTHER MEASURES AS NECESSARY TO PREVENT ANY TEXTURE COATING FROM ENTERING THE ENVIRONMENT. CONTAINMENT MEASURES SHALL BE APPROVED BY THE ENGINEER AND COST SHALL BE INCLUDED IN ITEMS BID ON.

NOTE: TEXTURE FINISH SHALL BE APPLIED AS SHOWN TO AREAS OF SUPERSTRUCTURE AND TO SUBSTRUCTURE ELEMENTS EXPOSED TO VIEW, INCLUDING ABUTMENTS AND WINGWALLS.

NOTE: TEXTURE COATING LIMITS ON BENTS SHALL EXTEND A MINIMUM OF ONE (1) FOOT BELOW GROUND SURFACE.

APPLIED TEXTURE FINISH SKETCH

NOTE: CONCRETE FINISHING SHALL BE IN ACCORDANCE WITH SECTION 604.22 OF THE TENNESSEE STANDARD SPECIFICATION. A CLASS I FINISH FOLLOWED BY AN APPLIED TEXTURE FINISH SHALL BE USED IN LIEU OF A CLASS II FINISH. THE COLOR OF THE FINISH SHALL BE SIMILAR TO MOUNTAIN GRAY, FEDERAL SPECIFICATION NO. 36440, FEDERAL COLOR STANDARD NO. 595A. A COLOR SAMPLE SHALL BE SUBMITTED TO THE ENGINEER FOR APPROVAL. NO TEXTURE FINISH SHALL BE APPLIED PRIOR TO COMPLETION OF PAVING AND HAUL OPERATIONS AT THE BRIDGE SITE. THE APPLIED TEXTURE FINISH TO EXISTING CONCRETE SHALL BE MEASURED AND PAID FOR UNDER ITEM NO. 604-04.01.

COORDINATES ARE NAD 83(1983), ARE DATUM ADJUSTED BY THE FACTOR OF 1.000082257 AND TIED TO THE TGRN. ALL ELEVATIONS ARE REFERENCED TO THE NAVD 1988 WITH GEOID 2003.

SEALED BY

MARY K. ROTH
REGISTERED ENGINEER
No. 123609
STATE OF TENNESSEE
07/31/2020

HISTORIC FRANKLIN TENNESSEE

CITY OF FRANKLIN
ENGINEERING DEPARTMENT

ESTIMATED QUANTITIES

VOID FOR BIDDING
FOR INFORMATION ONLY

TYPE	YEAR	PROJECT NO.	SHEET NO.
CONST.	2020	COF# 2019-0098	B5

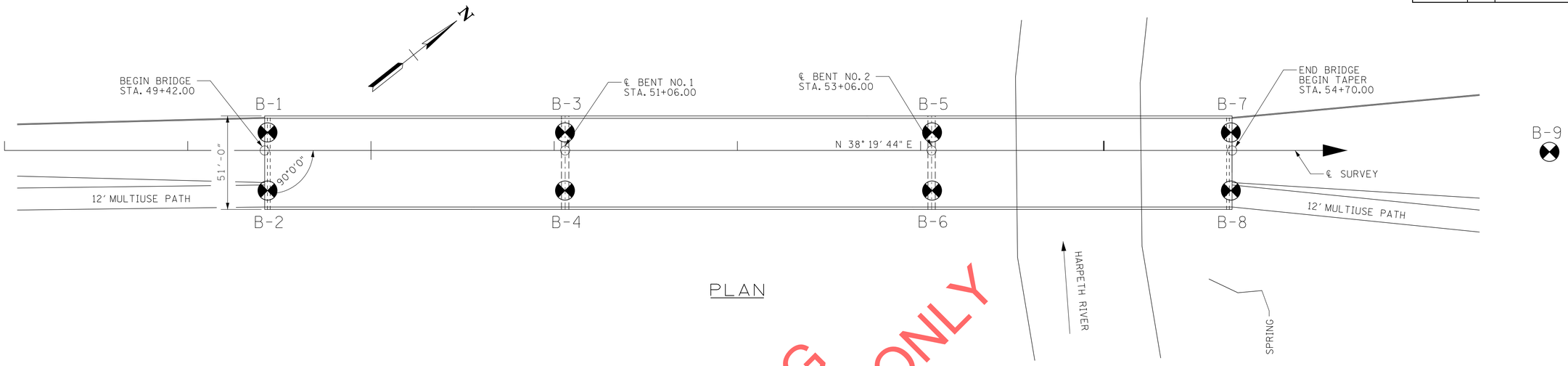

PLAN

DENOTES: PROPOSED BORING LOCATION

VOID FOR BIDDING
FOR INFORMATION ONLY

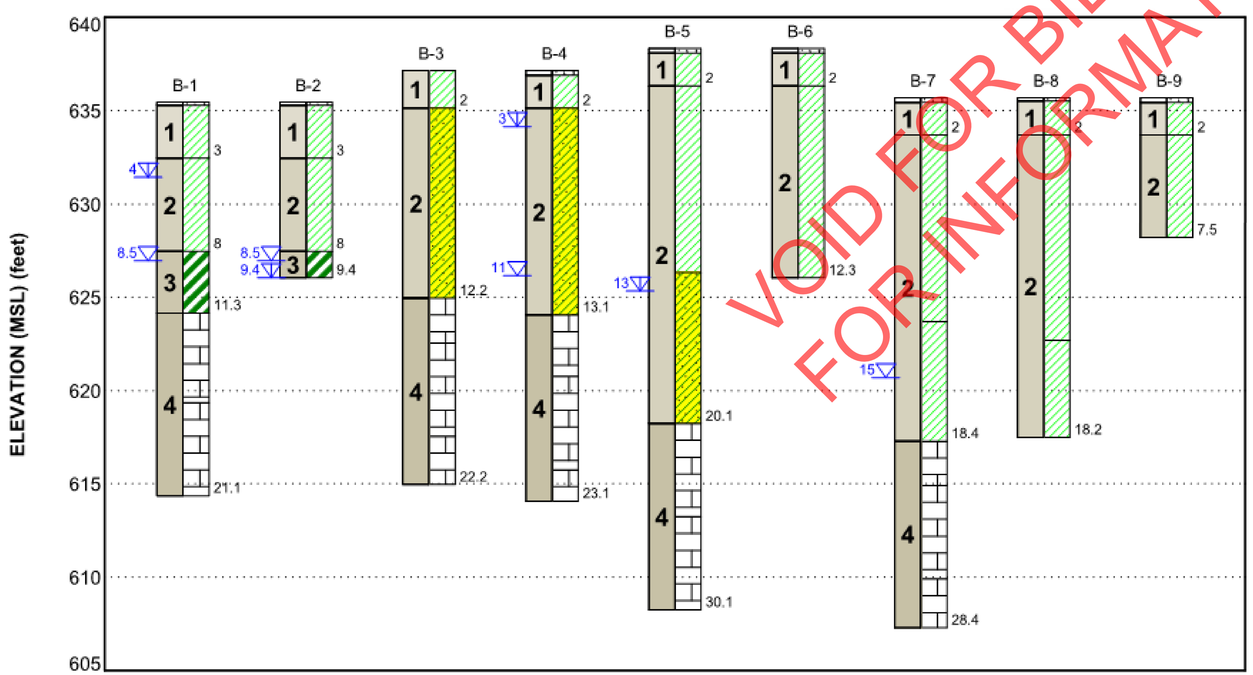

BORING NO.	STATION	OFFSET	GROUND ELEV.	ROCK ELEV.	TOTAL DEPTH
1	49+42.00	LT 10'	635.45	624.00	21.1
2	49+42.00	RT 20'	635.45	626.00	9.4
3	51+06.00	LT 10'	637.15	625.00	22.2
4	51+06.00	RT 20'	637.15	624.00	23.1
5	53+06.00	LT 10'	638.33	618.00	30.1
6	53+06.00	RT 20'	638.33	626.00	12.3
7	54+70.00	LT 10'	635.69	617.50	28.4
8	54+70.00	RT 20'	635.69	617.50	18.2
9	56+43.25	℄	635.69	628.00	7.5

Model Layer	Layer Name	General Description
1	Cultivated Zone	Soils that have been aerated and tilled for agricultural use. Includes topsoil
2	Lean Clay	Loamy clays with alluvial deposits containing sands and silts with some coarse sands and traces gravels deeper within stratum
3	Fat Clay	Relatively thin layers of high plasticity clays near bedrock. Includes gravels in some locations
4	Bedrock	Limestone weathered with soils and shale seams in the upper stratums and becoming more competent with depth

LEGEND

- Topsoil
- Lean Clay
- Fat Clay
- Limestone
- Sandy Lean Clay

COORDINATES ARE NAD 83(1983), ARE DATUM ADJUSTED BY THE FACTOR OF 1.000082257 AND TIED TO THE TGRN. ALL ELEVATIONS ARE REFERENCED TO THE NAVD 1988 WITH GEOID 2003.

SEALED BY

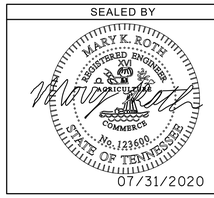

HISTORIC FRANKLIN TENNESSEE

CITY OF FRANKLIN
ENGINEERING DEPARTMENT

FOUNDATION DATA

7/30/2020 4:11:27 PM
Y:\Nashville\16019000S\16019033.00\Eng_Docs\Structures\DGN\Final Plans\SE Park_Foundation Data.dgn

TYPE	YEAR	PROJECT NO.	SHEET NO.
CONST.	2020	COF# 2019-0098	B6

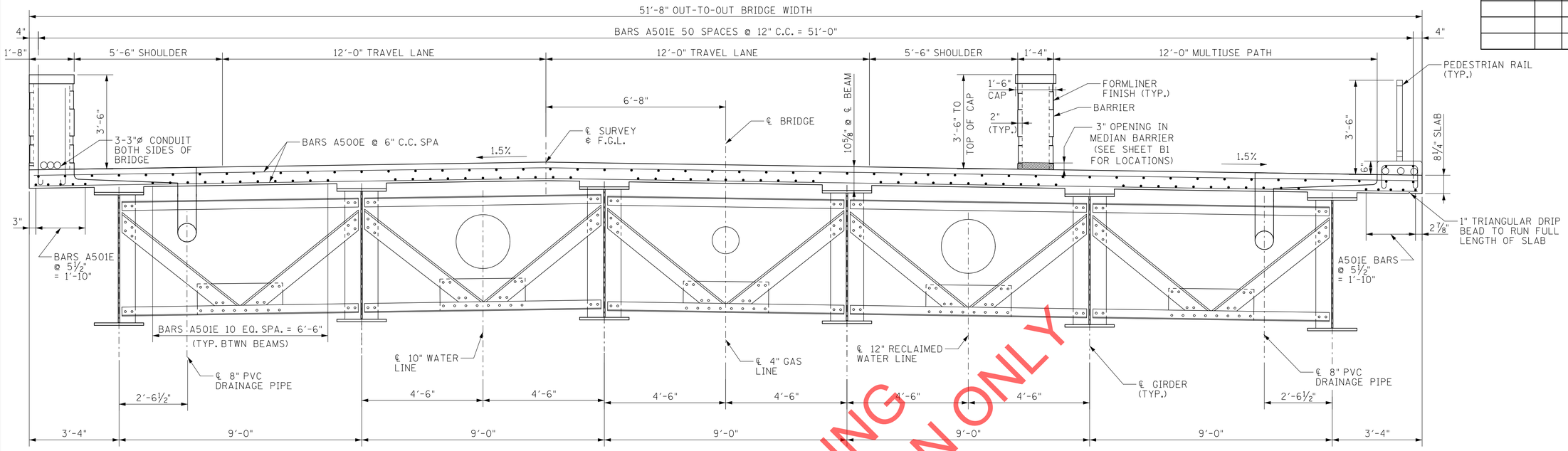

TYPICAL CROSS-SECTION AT MID-SPAN

(LOOKING FORWARD ON SURVEY)

NOTE: FIELD CUT LONGITUDINAL BARS TO FIT AROUND DECK DRAINS.

NOTE: SEE SHEET B25 FOR CLOSED DRAINAGE SYSTEM DETAILS.

NOTE: WHEN POURING THE SLAB, PROVISIONS SHALL BE MADE FOR SETTING REINFORCING STEEL FOR BRIDGE RAILS AND MEDIAN BARRIER. THE BRIDGE RAILS AND MEDIAN BARRIER SHALL NOT BE POURED UNTIL THE SLAB IS POURED AND CURED.

NOTE: ALL REINFORCING STEEL FOR THE NEW CONCRETE BRIDGE DECK SHALL BE EPOXY COATED. REINFORCING STEEL TO BE IN THE PRICE BID FOR ITEM NO. 604-02.03 EPOXY COATED REINFORCING STEEL, LBS.

NOTE: THE COST OF CONCRETE REQUIRED FOR THE NEW BRIDGE DECK SHALL BE INCLUDED IN THE PRICE BID FOR ITEM NO. 604-03.09 CLASS "D" CONCRETE (BRIDGE DECK), C.Y.

STRUCTURAL STEEL: SHALL CONFORM TO AASHTO M270 (ASTM A709) GRADE 50W UNLESS OTHERWISE NOTED. ALL STRUCTURAL STEEL FOR GIRDER FLANGES IN TENSION AND ALL WEBS SHALL MEET THE SUPPLEMENTAL REQUIREMENTS FOR LONGITUDINAL CHARPY V-NOTCH TESTS SPECIFIED IN ASTM SPECIFICATIONS. ZONE 2 OF NON-FRACTURE CRITICAL CRITERIA SHALL APPLY.

FIELD CONNECTIONS: SHALL BE 1" Ø HIGH TENSILE STRENGTH BOLTS ASTM F3125 GRADE 1325 TYPE III UNLESS OTHERWISE SHOWN. SEE AASHTO LRFD BRIDGE CONSTRUCTION SPECIFICATIONS ART. 11.3.2 AND SECTION 602 OF THE STANDARD SPECIFICATIONS.

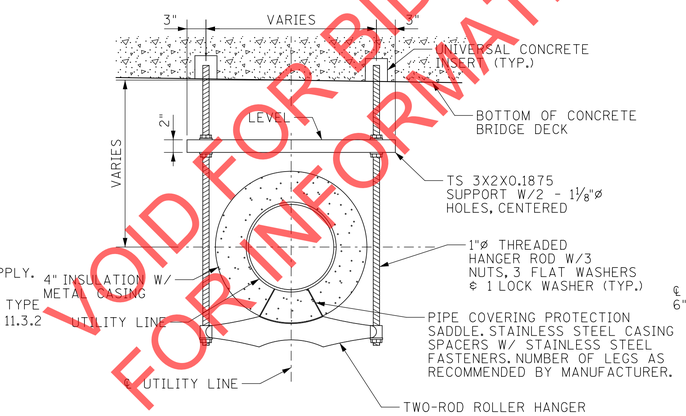

TYPICAL WATER AND RECLAIMED WATER LINE HANGER DETAIL

NOTE: HANGERS TO BE SPACED AT 20' MAX.

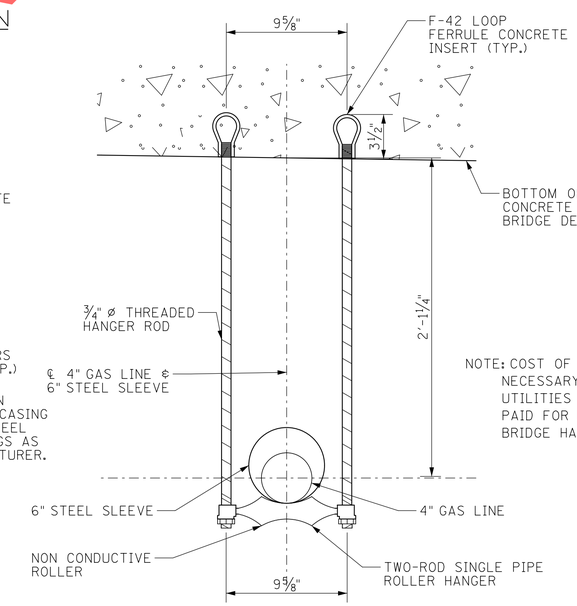

TYPICAL GAS LINE HANGER DETAIL

NOTE: HANGERS TO BE SPACED AT 20' MAX.

ESTIMATED QUANTITIES	
CLASS "D" CONCRETE (BRIDGE DECK) C.Y.	EPOXY COATED REINFORCING STEEL LBS.
738	256385

NOTE: COST OF ALL MATERIALS AND LABOR NECESSARY FOR THE INSTLLATION OF UTILITIES ON THE BRIDGE SHALL BE PAID FOR UNDER ITEM NO. 795-13.04, BRIDGE HANGER SYSTEM (LS).

COORDINATES ARE NAD 83(1983), ARE DATUM ADJUSTED BY THE FACTOR OF 1.000082257 AND TIED TO THE TGRN. ALL ELEVATIONS ARE REFERENCED TO THE NAVD 1988 WITH GEOID 2003.

SEALED BY

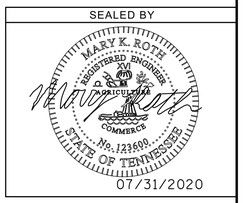

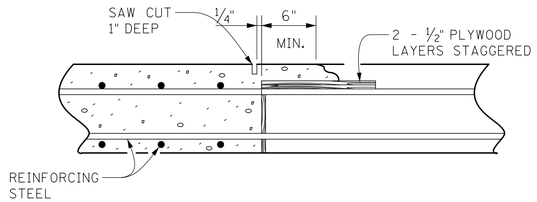

SLAB CONSTRUCTION JOINT DETAIL

NOTE: CONTRACTOR SHALL USE FLEX-900 FLEXIBLE BALL JOINTS OR APPROVED EQUAL FOR THE 10" WATER LINE AND 12" RECLAIMED WATER LINE. BALL JOINTS WILL BE INSTALLED AT EACH END OF THE BRIDGE AND SHALL BE INCLUDED IN THE COST FOR BRIDGE HANGER SYSTEM, ITEM NO. 795-13.04 (LS).

NOTE: UTILITY LINES SHALL BE LOCATED IN SUCH A WAY AS TO NOT CONFLICT WITH CROSS-FRAME MEMBERS.

NOTE: THE CONCRETE DECK SHALL NOT BE POURED UNTIL ALL STRUCTURAL STEEL IS ERECTED AND ALL WELDING AND BOLTING COMPLETE.

THE CONTRACTOR SHALL MAKE ADEQUATE PROVISIONS DURING PLACEMENT OF THE SLAB TO PREVENT THE EXTERIOR GIRDERS FROM TWISTING.

ALL SLAB CONSTRUCTION JOINTS SHALL BE IN ACCORDANCE WITH THE SLAB CONSTRUCTION JOINT DETAIL SHOWN ABOVE.

ADDITIONAL SHOP SPLICE NOTE: SHOP SPLICES NECESSARY DUE TO LENGTHS OR SIZE OF MATERIAL INVOLVED MAY BE ADDED BY THE FABRICATOR SUBJECT TO APPROVAL BY THE ENGINEER AND SHALL BE AT NO ADDITIONAL COST TO THE PROJECT.

ADDITIONAL FIELD SPLICE NOTE: FIELD SPLICES NECESSARY DUE TO LENGTHS INVOLVED MAY BE ADDED BY THE FABRICATOR SUBJECT TO APPROVAL BY THE ENGINEER AND SHALL BE AT NO ADDITIONAL COST TO HE PROJECT.

FIELD SPLICE NOTE: FIELD SPLICES SHOWN ON THE PLANS MAY BE DELETED BY THE CONTRACTOR. ADJUSTMENT TO THE LUMP SUM PRICE FOR STEEL STRUCTURES SHALL BE IN ACCORDNCE WITH THE SPECIFICATIONS.

WELDING: ANSI/AASHTO/AWS D1.5-CURRENT EDITION BRIDGE WELDING CODE AND SECTION 602 OF THE STANDARD SPECIFICATIONS.

APPROVAL OF MATERIALS: NO FABRICATION SHALL BE STARTED UNTIL THE MATERIALS INVOLVED HAVE BEEN APPROVED BY THE ENGINEER OF RECORD.

HISTORIC FRANKLIN TENNESSEE

CITY OF FRANKLIN
ENGINEERING DEPARTMENT

SUPERSTRUCTURE

VOID FOR BIDDING FOR INFORMATION ONLY

7/30/2020 4:11:34 PM
Y:\Nashville\16019000S\16019033.00\Eng_Docs\Structures\DGN\Final Plans\SE Park_Superstructure.dgn

TYPE	YEAR	PROJECT NO.	SHEET NO.
CONST.	2020	COF# 2019-0098	B7

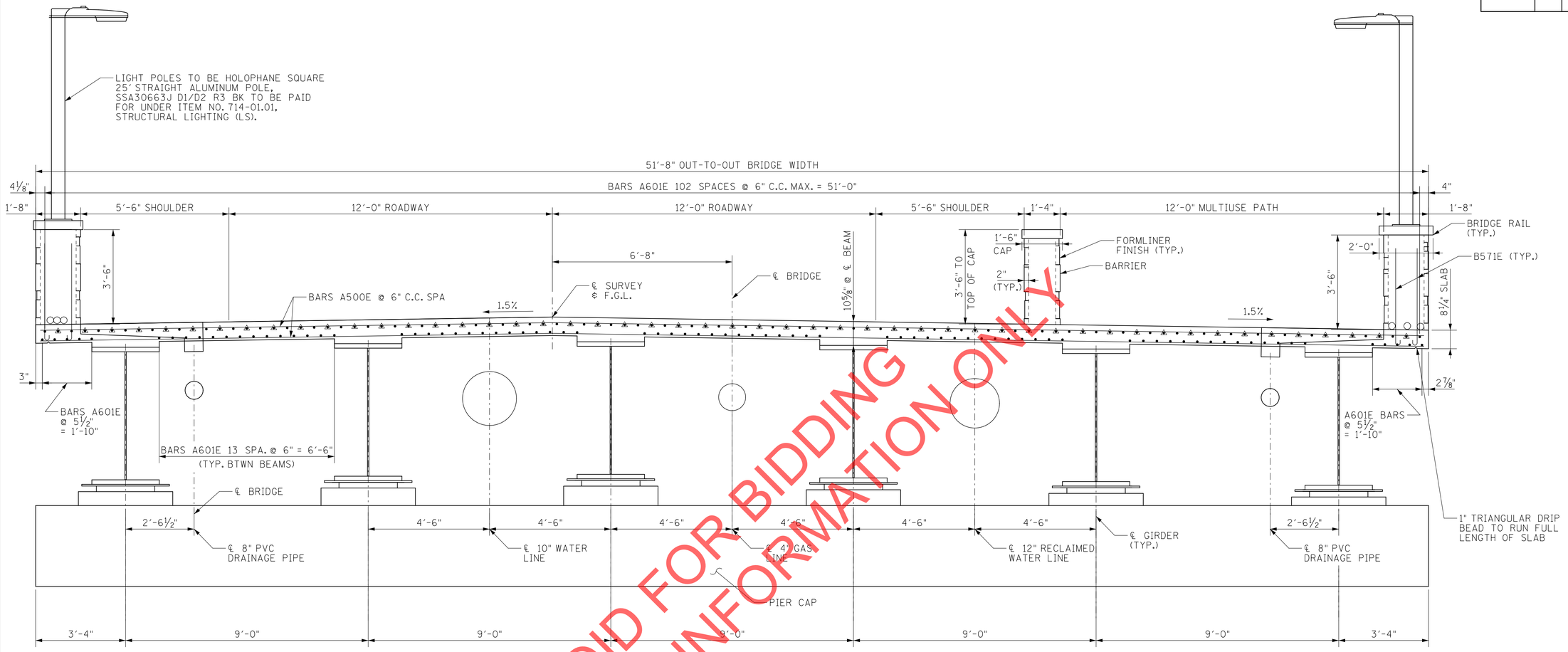

VOID FOR BIDDING
FOR INFORMATION ONLY

♣ DENOTES: CUT-OFF BARS

NOTE: FIELD CUT LONGITUDINAL BARS TO FIT AROUND DECK DRAINS.

TYPICAL CROSS-SECTION AT BENT

(LOOKING FORWARD ON SURVEY)

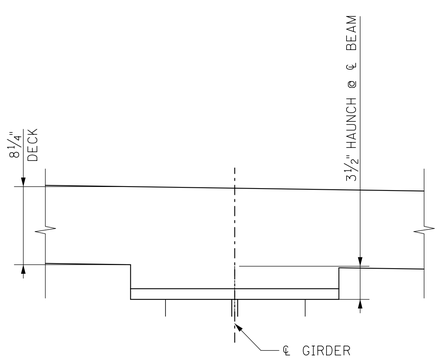

TYPICAL HAUNCH DETAIL

NOTE: HAUNCH THICKNESS IS 3 1/2" INCLUDING TOP FLANGE THICKNESS

COORDINATES ARE NAD 83(1983), ARE DATUM ADJUSTED BY THE FACTOR OF 1.000082257 AND TIED TO THE TGRN. ALL ELEVATIONS ARE REFERENCED TO THE NAVD 1988 WITH GEOID 2003.

SEALED BY

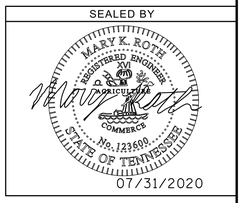

HISTORIC FRANKLIN TENNESSEE

CITY OF FRANKLIN
ENGINEERING DEPARTMENT

SUPERSTRUCTURE AT BENT

7/30/2020 4:11:35 PM
Y:\Nashville\16019000S\16019033.00\Eng_Docs\Structures\DGN\Final Plans\SE Park_Superstructure At Pier.dgn

TYPE	YEAR	PROJECT NO.	SHEET NO.
CONST.	2020	COF# 2019-0098	B8

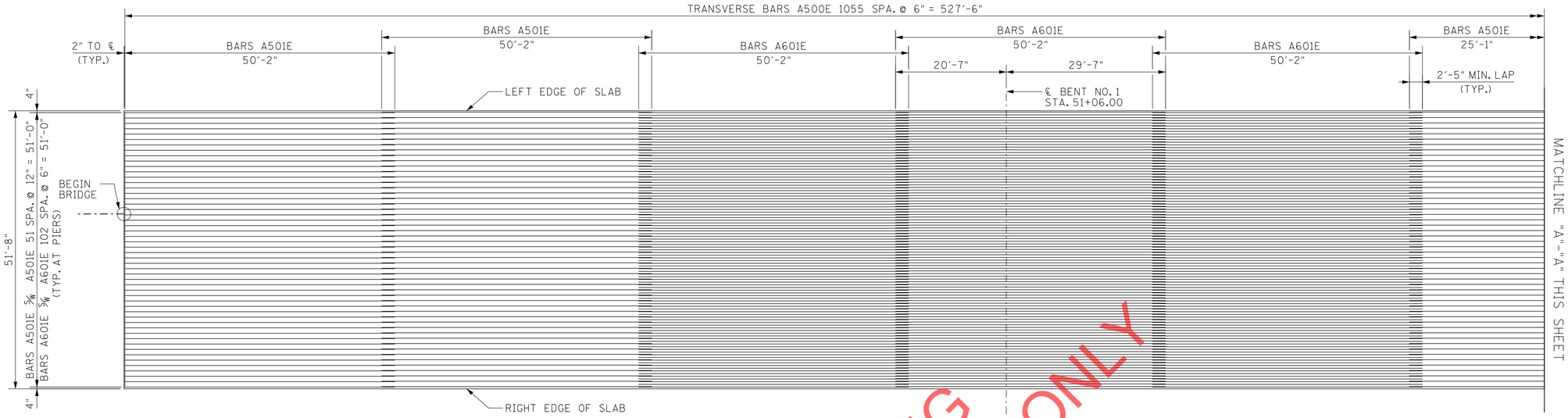

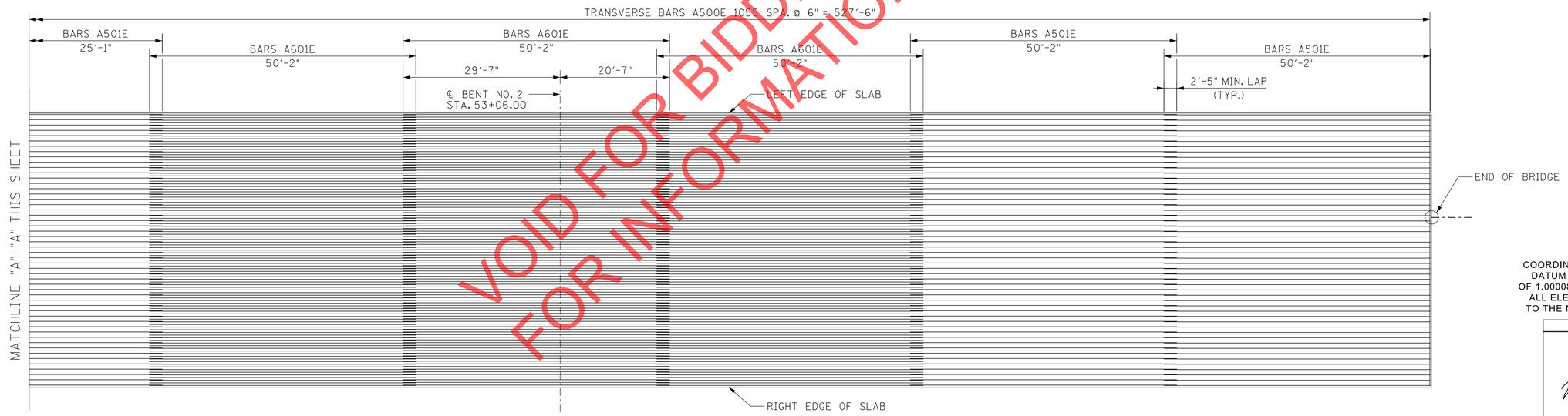

VOID FOR BIDDING
FOR INFORMATION ONLY

SLAB PLAN

(SHOWING TRANSVERSE BARS AND TOP OF SLAB LONGITUDINAL BARS)

COORDINATES ARE NAD 83(1983), ARE DATUM ADJUSTED BY THE FACTOR OF 1.000082257 AND TIED TO THE TGRN. ALL ELEVATIONS ARE REFERENCED TO THE NAVD 1988 WITH GEOID 2003.

SEALED BY

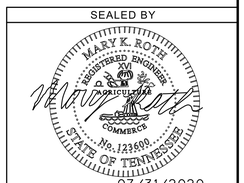

07/31/2020

HISTORIC FRANKLIN TENNESSEE

CITY OF FRANKLIN
ENGINEERING DEPARTMENT

SUPERSTRUCTURE DETAILS

7/30/2020 4:11:37 PM
Y:\Nashville\16019000S\16019033.00\Eng_Docs\Structures\DGN\Final Plans\SE Park_Superstructure Details.dgn

TYPE	YEAR	PROJECT NO.	SHEET NO.
CONST.	2020	COF# 2019-0098	B9

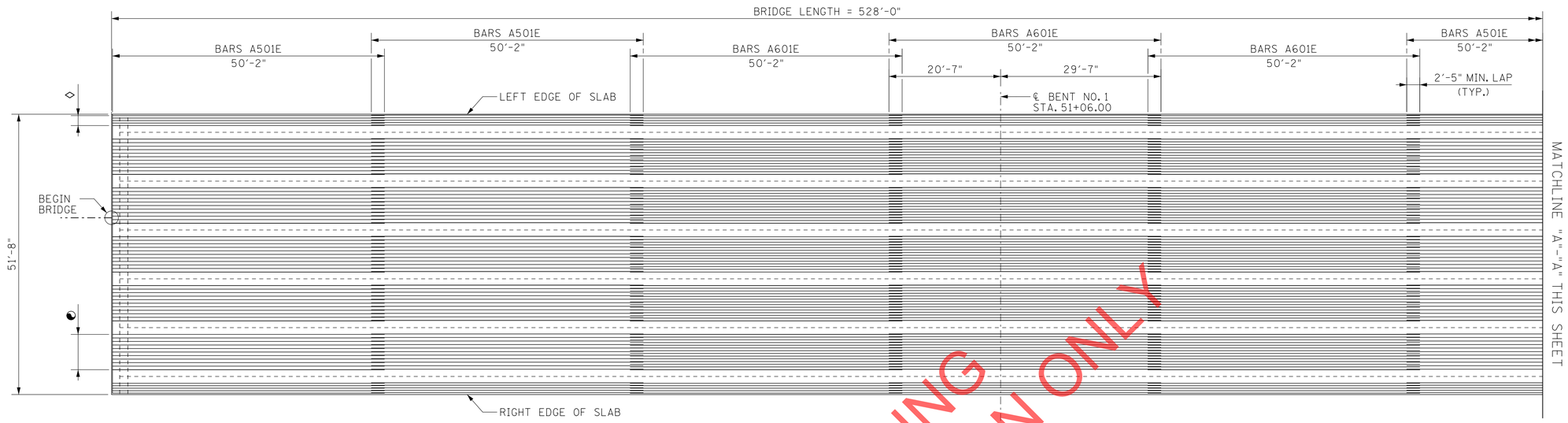

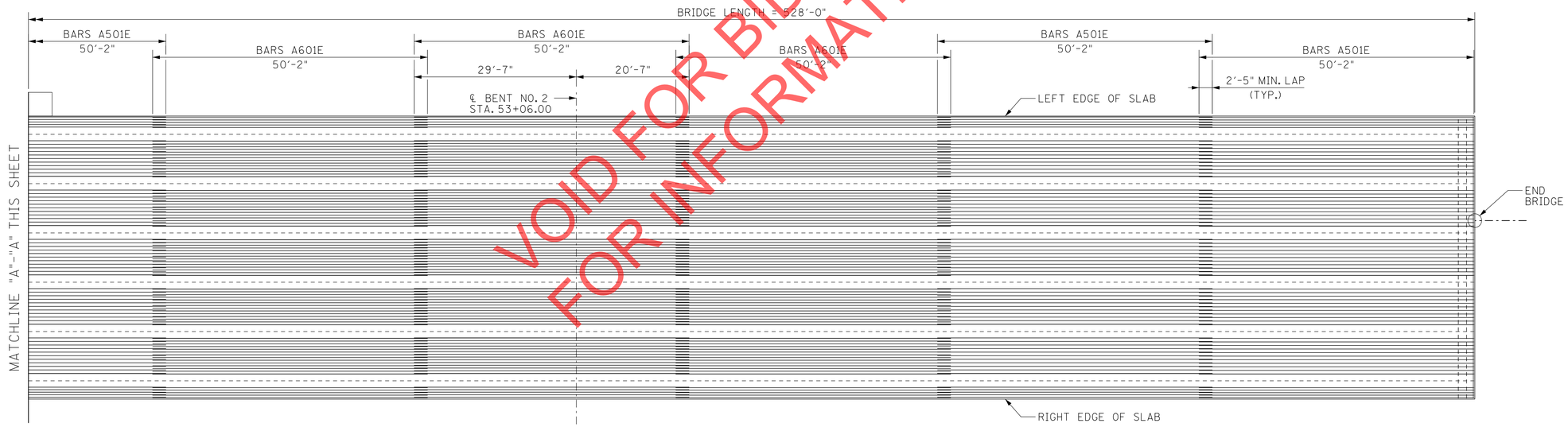

VOID FOR BIDDING
FOR INFORMATION ONLY

COORDINATES ARE NAD 83(1983), ARE DATUM ADJUSTED BY THE FACTOR OF 1.000082257 AND TIED TO THE TGRN. ALL ELEVATIONS ARE REFERENCED TO THE NAVD 1988 WITH GEOID 2003.

SEALED BY

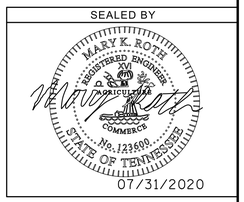

SLAB PLAN

(SHOWING BOTTOM OF SLAB LONGITUDINAL BARS)

◐ DENOTES: BARS A601E 13 SPA. @ 6" = 6'-6" (AT PIERS)
BARS A501E 10 EQ. SPA. = 6'-6"
(TYP. BETWEEN BEAMS)

◊ DENOTES: BARS A601E 4 SPA. @ 5½" = 1'-10" (AT PIERS)
BARS A501E 4 SPA. @ 5½" = 1'-10"
(TYP. AT OVERHANG)

HISTORIC FRANKLIN TENNESSEE

CITY OF FRANKLIN
ENGINEERING DEPARTMENT

SUPERSTRUCTURE DETAILS

7/30/2020 4:11:38 PM
Y:\Nashville\16019000S\16019033.00\Eng_Docs\Structures\DGN\Final Plans\SE Park_Superstructure Details 2.dgn

TYPE	YEAR	PROJECT NO.	SHEET NO.
CONST.	2020	COF# 2019-0098	B10

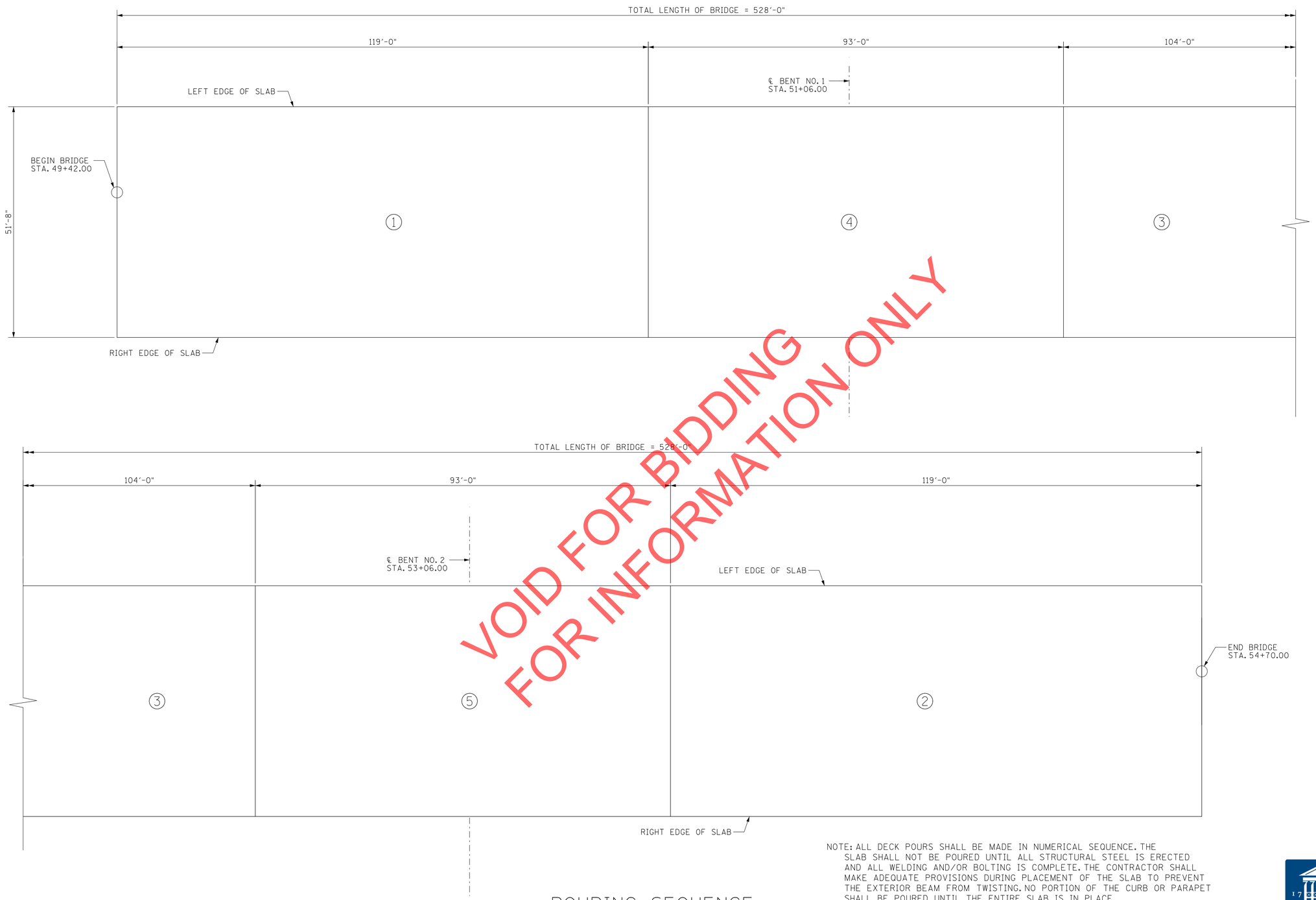

VOID FOR BIDDING
FOR INFORMATION ONLY

COORDINATES ARE NAD 83(1983), ARE DATUM ADJUSTED BY THE FACTOR OF 1.000082257 AND TIED TO THE TGRN. ALL ELEVATIONS ARE REFERENCED TO THE NAVD 1988 WITH GEOID 2003.

SEALED BY

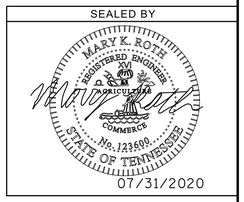

NOTE: ALL DECK POURS SHALL BE MADE IN NUMERICAL SEQUENCE. THE SLAB SHALL NOT BE POURED UNTIL ALL STRUCTURAL STEEL IS ERECTED AND ALL WELDING AND/OR BOLTING IS COMPLETE. THE CONTRACTOR SHALL MAKE ADEQUATE PROVISIONS DURING PLACEMENT OF THE SLAB TO PREVENT THE EXTERIOR BEAM FROM TWISTING. NO PORTION OF THE CURB OR PARAPET SHALL BE POURED UNTIL THE ENTIRE SLAB IS IN PLACE.

POURING SEQUENCE

HISTORIC FRANKLIN TENNESSEE

CITY OF FRANKLIN
ENGINEERING DEPARTMENT

DECK POURING SEQUENCE

7/30/2020 4:11:39 PM
Y:\Nashville\16019000S\16019033.00\Eng_Docs\Structures\DGN\Final Plans\SE Park_Pouring Sequence.dgn

TYPE	YEAR	PROJECT NO.	SHEET NO.
CONST.	2020	COF# 2019-0098	B11

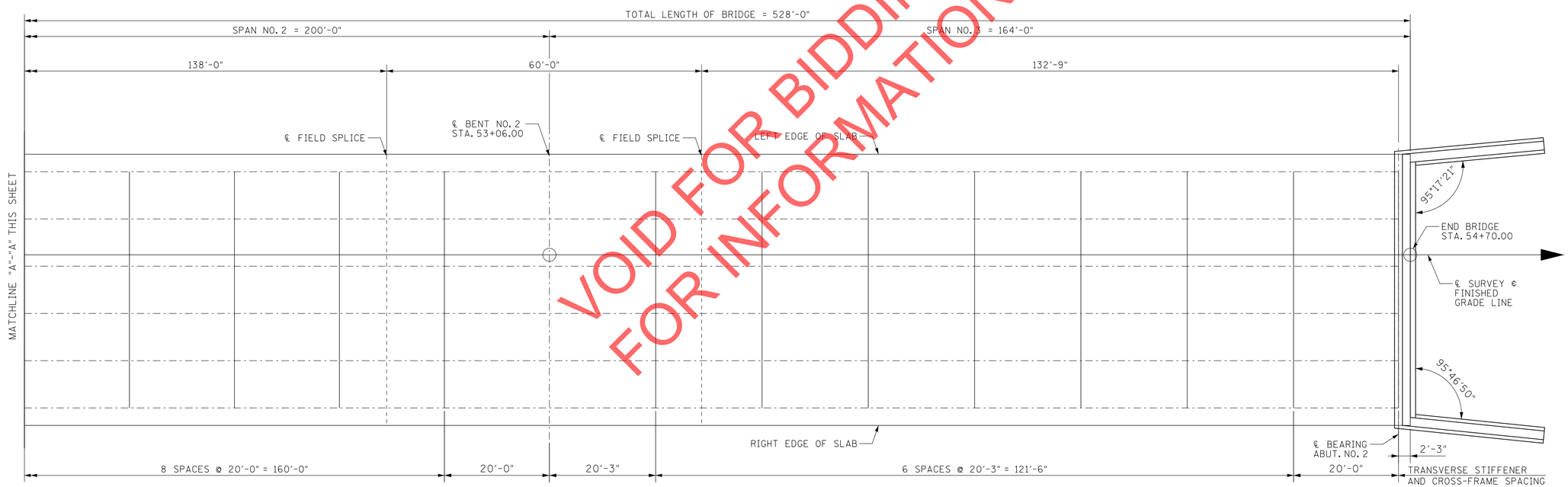

VOID FOR BIDDING
FOR INFORMATION ONLY

COORDINATES ARE NAD 83(1983), ARE DATUM ADJUSTED BY THE FACTOR OF 1.000082257 AND TIED TO THE TGRN. ALL ELEVATIONS ARE REFERENCED TO THE NAVD 1988 WITH GEOID 2003.

SEALED BY

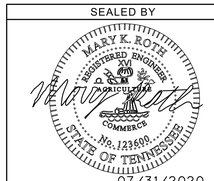

07/31/2020

NOTE: GIRDERS MAY HAVE TO BE CRANE-LIFTED, JACKED, NEEDLE-BEAMED, ETC. TO ACHIEVE THE PROPER CROSS-SLOPE AND HOLE ALIGNMENT DURING TRANSVERSE BRACING INSTALLATION. THE CONTRACTOR WILL NOT BE ALLOWED TO REAM HOLES UNTIL 50% OF THE HOLES IN THE PATTERN AT THAT LOCATION ARE FILLED WITH BOLTS OF PLANS SPECIFIED SIZE. ALL TRANSVERSE BRACING SHALL BE IN PLACE AND ALL BOLTS TENSIONED TO THE PLANS SPECIFIED VALUES PRIOR TO THE SLAB POUR. ALL COSTS OF TRANSVERSE BRACING INSTALLATION TO BE INCLUDED IN THE LUMP SUM COST OF STEEL STRUCTURES.

NOTE: STRAIGHT GIRDER TRANSVERSE BRACING, (INCLUDING CLOSURE BRACING), SHALL BE FABRICATED FOR TOTAL CAMBER MINUS GIRDER SELF-WEIGHT CAMBER.

FRAMING PLAN

HISTORIC FRANKLIN TENNESSEE

CITY OF FRANKLIN
ENGINEERING DEPARTMENT

FRAMING PLAN

7/30/2020 4:11:40 PM
Y:\Nashville\16019000S\16019033.00\Eng_Docs\Structures\DGN\Final Plans\SE Park_Framing Plan.dgn

TYPE	YEAR	PROJECT NO.	SHEET NO.
CONST.	2020	COF# 2019-0098	B12

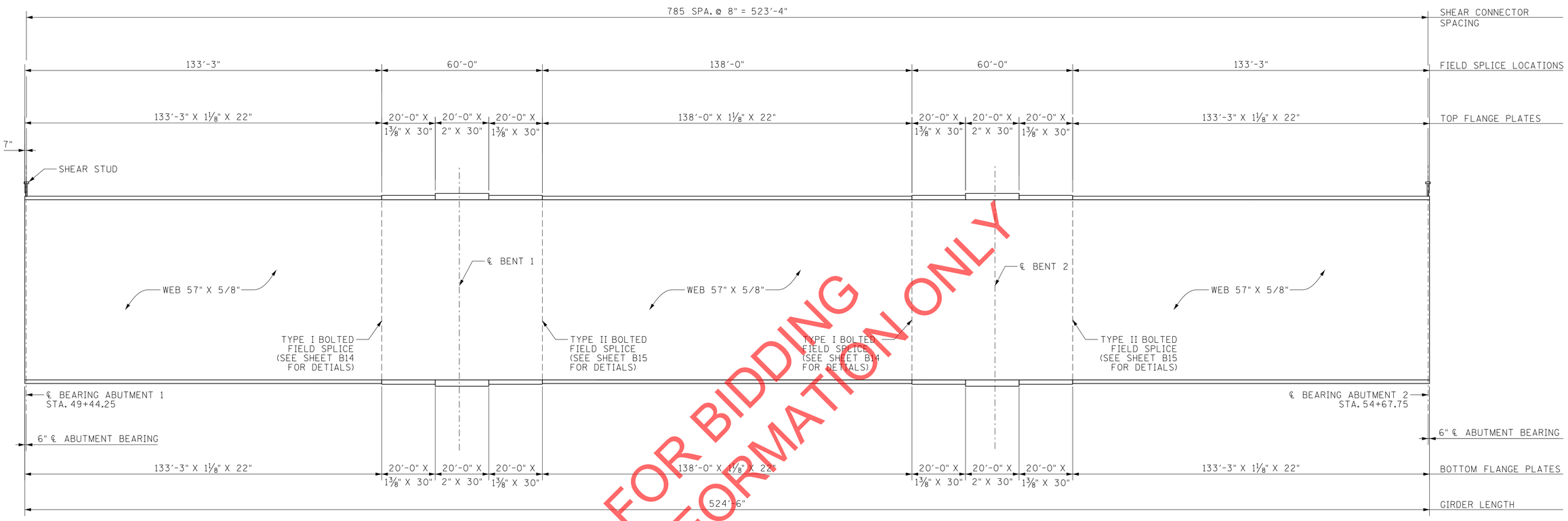

GIRDER ELEVATION

VOID FOR BIDDING
FOR INFORMATION ONLY

EXTERIOR BEAM																														
SPAN POINTS	0	0.1	0.2	0.3	0.4	0.5	0.6	0.7	0.8	0.9	1	1.1	1.2	1.3	1.4	1.5	1.6	1.7	1.8	1.9	2	2.1	2.2	2.3	2.4	2.5	2.6	2.7	2.8	2.9	3
DEAD LOAD GIRDER	0 "	4/8"	7/8"	1 1/8"	1 2/8"	1 1/8"	1 "	5/8"	3/8"	1/8"	0 "	1/8"	3/8"	6/8"	1 "	1 1/8"	1 "	6/8"	3/8"	1/8"	0 "	1/8"	3/8"	5/8"	1 "	1 1/8"	1 2/8"	1 1/8"	7/8"	4/8"	0 "
DEAD LOAD SLAB	0 "	1 2/8"	2 2/8"	3 "	3 2/8"	3 1/8"	2 4/8"	1 6/8"	7/8"	2/8"	0 "	2/8"	7/8"	1 6/8"	2 3/8"	2 5/8"	2 3/8"	1 6/8"	7/8"	2/8"	0 "	2/8"	7/8"	1 6/8"	2 4/8"	3 1/8"	3 2/8"	3 "	2 2/8"	1 2/8"	0 "
COMPOSITE DEAD LOAD (EXCLUDING WEARING SURFACE)	0 "	4/8"	7/8"	1 1/8"	1 1/8"	1 1/8"	7/8"	5/8"	3/8"	1/8"	0 "	1/8"	3/8"	6/8"	1 "	1 "	1 "	6/8"	3/8"	1/8"	0 "	1/8"	3/8"	5/8"	7/8"	1 1/8"	1 1/8"	1 1/8"	7/8"	4/8"	0 "
TOTAL DEAD LOAD	0 "	2 1/8"	4 "	5 1/8"	5 5/8"	5 3/8"	4 3/8"	3 "	1 5/8"	4/8"	0 "	3/8"	1 5/8"	3 1/8"	4 3/8"	4 6/8"	4 3/8"	3 1/8"	1 5/8"	3/8"	0 "	4/8"	1 5/8"	3 "	4 3/8"	5 3/8"	5 5/8"	5 1/8"	4 "	2 1/8"	0 "

INTERIOR BEAM																														
SPAN POINTS	0	0.1	0.2	0.3	0.4	0.5	0.6	0.7	0.8	0.9	1	1.1	1.2	1.3	1.4	1.5	1.6	1.7	1.8	1.9	2	2.1	2.2	2.3	2.4	2.5	2.6	2.7	2.8	2.9	3
DEAD LOAD GIRDER	0 "	4/8"	7/8"	1 1/8"	1 2/8"	1 1/8"	1 "	5/8"	3/8"	1/8"	0 "	1/8"	3/8"	6/8"	1 "	1 1/8"	1 "	6/8"	3/8"	1/8"	0 "	1/8"	3/8"	5/8"	1 "	1 1/8"	1 2/8"	1 1/8"	7/8"	4/8"	0 "
DEAD LOAD SLAB	0 "	1 3/8"	2 5/8"	3 3/8"	3 5/8"	3 4/8"	2 7/8"	2 "	1 1/8"	3/8"	0 "	2/8"	1 "	2 "	2 6/8"	3 "	2 6/8"	2 "	1 "	2/8"	0 "	3/8"	1 1/8"	2 "	2 7/8"	3 4/8"	3 5/8"	3 3/8"	2 5/8"	1 3/8"	0 "
COMPOSITE DEAD LOAD (EXCLUDING WEARING SURFACE)	0 "	3/8"	6/8"	1 "	1 1/8"	1 1/8"	7/8"	5/8"	3/8"	1/8"	0 "	1/8"	3/8"	5/8"	7/8"	1 "	7/8"	5/8"	3/8"	1/8"	0 "	1/8"	3/8"	5/8"	7/8"	1 1/8"	1 1/8"	1 "	6/8"	3/8"	0 "
TOTAL DEAD LOAD	0 "	2 3/8"	4 2/8"	5 5/8"	6 "	5 6/8"	4 6/8"	3 2/8"	1 6/8"	4/8"	0 "	3/8"	1 6/8"	3 3/8"	4 5/8"	5 1/8"	4 5/8"	3 3/8"	1 6/8"	3/8"	0 "	4/8"	1 6/8"	3 2/8"	4 6/8"	5 6/8"	6 "	5 4/8"	4 2/8"	2 3/8"	0 "

NOTE: POSITIVE DEFLECTION IS DOWNWARD.

NOTE: IF PRESTRESSED DECK PANELS ARE USED AND THE GIRDERS ARE PROFILED AFTER THE PANELS ARE IN PLACE, REDUCE THE DEAD LOAD CORRECTION VALUES SHOWN BY 25%.

DEAD LOAD CORRECTION CURVE

(GIRDER SHALL BE CAMBERED TO COMPENSATE FOR DEAD LOAD DEFLECTION AND VERTICAL CURVE)

COORDINATES ARE NAD 83(1983), ARE DATUM ADJUSTED BY THE FACTOR OF 1.000082257 AND TIED TO THE TGRN. ALL ELEVATIONS ARE REFERENCED TO THE NAVD 1988 WITH GEOID 2003.

SEALED BY

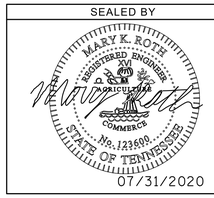

HISTORIC FRANKLIN TENNESSEE

CITY OF FRANKLIN
ENGINEERING DEPARTMENT

STRUCTURAL STEEL DETAILS

7/30/2020 4:11:41 PM
Y:\Nashville\16019000S\16019033.00\Eng_Docs\Structures\DGN\Final Plans\SE Park_Structural Steel Details 2.dgn

TYPE	YEAR	PROJECT NO.	SHEET NO.
CONST.	2020	COF# 2019-0098	B13

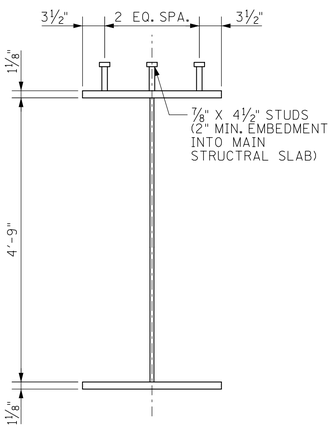

TYPICAL SECTION
22" FLANGE

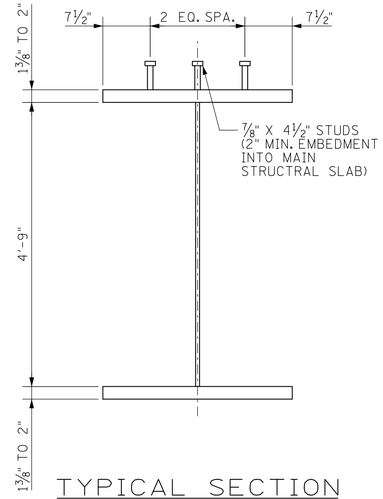

TYPICAL SECTION
30" FLANGE

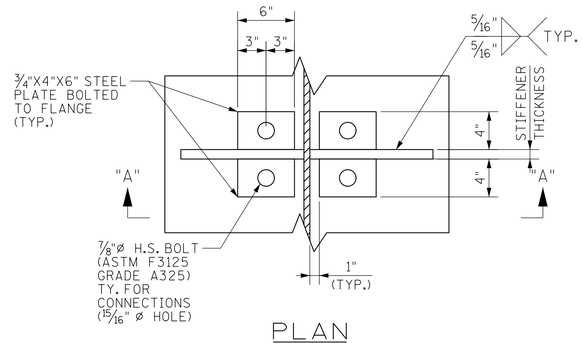

PLAN

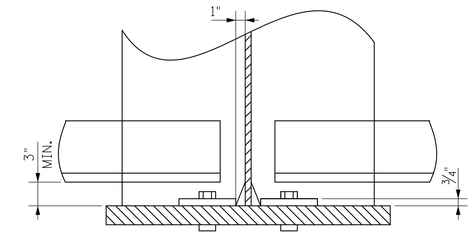

SECTION "A-A"
(STIFFENER CLIP DIMENSIONS TYP.)

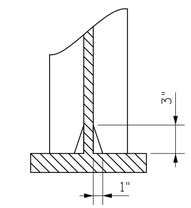

STIFFENER CLIP
(TOP AND BOTTOM)

STANDARD CONNECTION DETAILS AT INTERMEDIATE DIAPHRAGMS

NOTE: TAB YIELD STRENGTH SHALL MATCH STIFFENER YIELD STRENGTH. TAB SIZE AND LOCATION SHALL BE SHOWN REGARDLESS OF STIFFENER WIDTH.

NOTE: STIFFENER MAY BE WELDED DIRECTLY TO COMPRESSION FLANGE UTILIZING ⅜" FILLET WELDS FOR CURVED GIRDERS OR 5/16" FILLER WELDS FOR STRAIGHT GIRDERS APPLIED FULL WIDTH BOTH SIDES OF STIFFENER.

NOTE: WEB STIFFENER FIT SHALL BE WITHIN AWS D1.1 FABRICATION TOLERANCE.

NOTE: ⅞"ø - A325 BOLTS TO BE TORQUED TO AASHTO SPECIFICATION FOR FRICTION CONNECTION PRIOR TO TAB TO STIFFENER WELD FOR STRAIGHT GIRDERS.

VOID FOR BIDDING
FOR INFORMATION ONLY

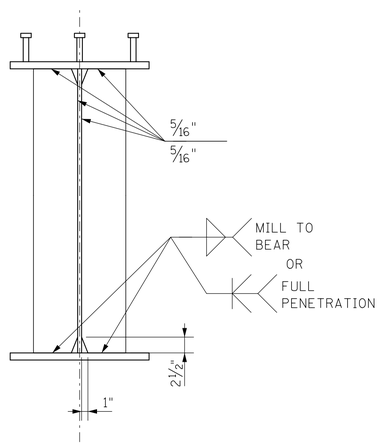

SECTION AT BEARING
¾" X 7" (ABUT. 1 ℄ 2)
1" X 13" (BENT 1 ℄ 2)
BEARING STIFFENERS

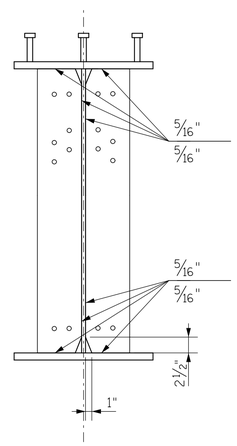

SECTION AT
INTERMEDIATE
DIAPHRAGM
⅜" X 7"
DIAPHRAGM CONNECTOR

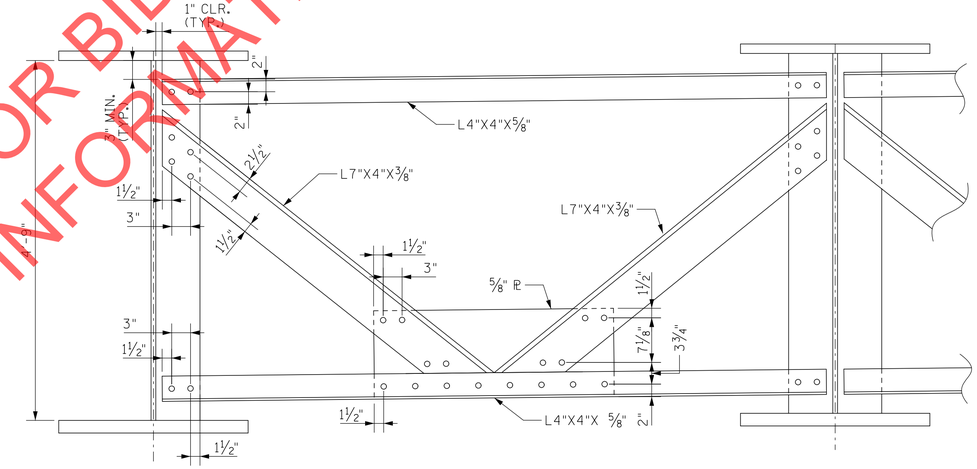

TYPICAL CROSS-FRAME

NOTES:

1. ALL CROSS-FRAMES BETWEEN GIRDERS SHALL BE INSTALLED WITH ERECTION PINS AND BOLTS IN ACCORDANCE WITH ERECTION PLAN APPROVED BY THE ENGINEER.
2. FASTENERS SHALL BE ASTM F3125 GRADE A325 TYPE 3 BOLTS. BOLTS 1"ø, HOLES 1⅛" IN CROSS-FRAME MEMBERS. STIFFENER BOLT HOLES SHALL BE 1 1/16"ø. TWO HARDENED WASHERS REQUIRED FOR EACH SET OF OVERSIZED HOLES.

COORDINATES ARE NAD 83(1983), ARE DATUM ADJUSTED BY THE FACTOR OF 1.000082257 AND TIED TO THE TGRN. ALL ELEVATIONS ARE REFERENCED TO THE NAVD 1988 WITH GEOID 2003.

SEALED BY

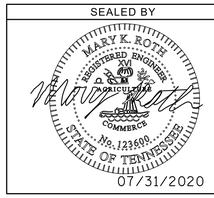

HISTORIC
FRANKLIN
TENNESSEE

CITY OF FRANKLIN
ENGINEERING DEPARTMENT

STRUCTURAL STEEL DETAILS

7/30/2020 4:11:46 PM
Y:\Nashville\16019000S\16019033.00\Eng_Docs\Structures\DGN\Final Plans\SE Park_Structural Steel Details 1.dgn

TYPE	YEAR	PROJECT NO.	SHEET NO.
CONST.	2020	COF# 2019-0098	B14

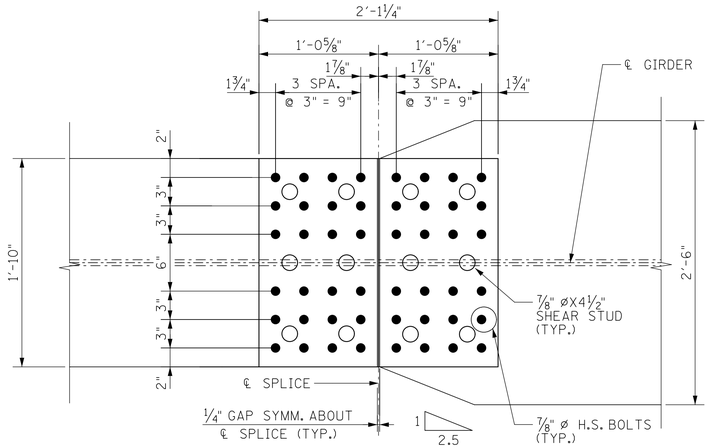

PLAN (TOP OF TOP FLANGE)

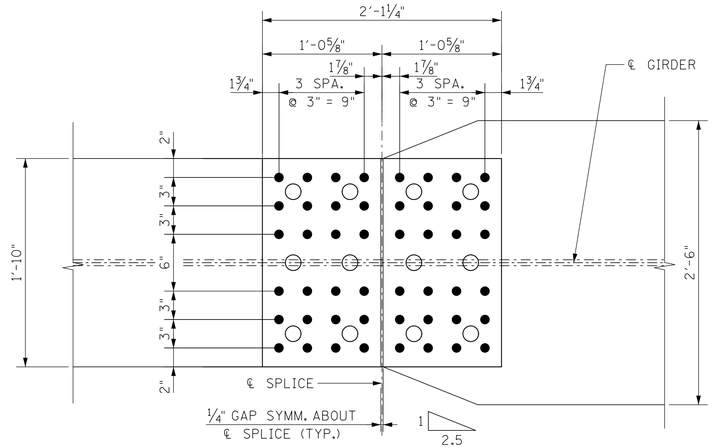

PLAN (BOTTOM OF BOTTOM FLANGE)

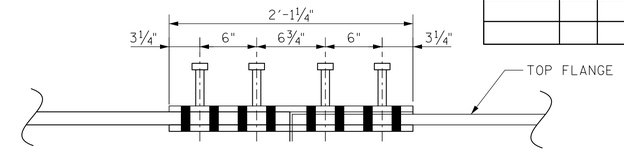

ELEVATION SHOWING SHEAR CONNECTORS

NOTE: SHEAR STUDS ARE TO BE SHOP WELDED ON TOP OF SPLICE PLATE BEFORE FIELD ASSEMBLY

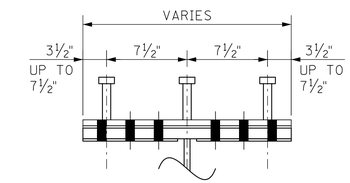

SECTION SHOWING SHEAR CONNECTORS

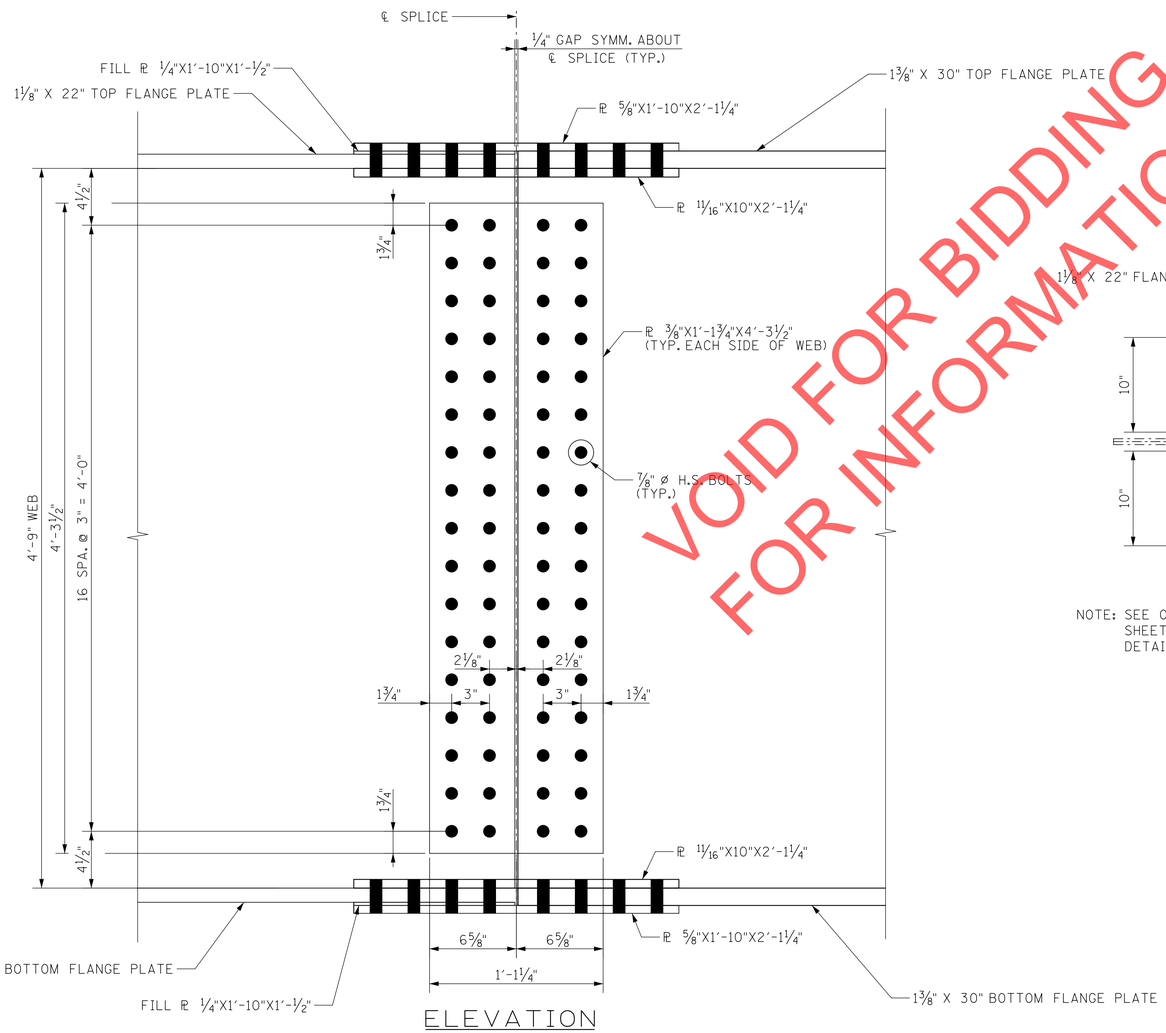

ELEVATION

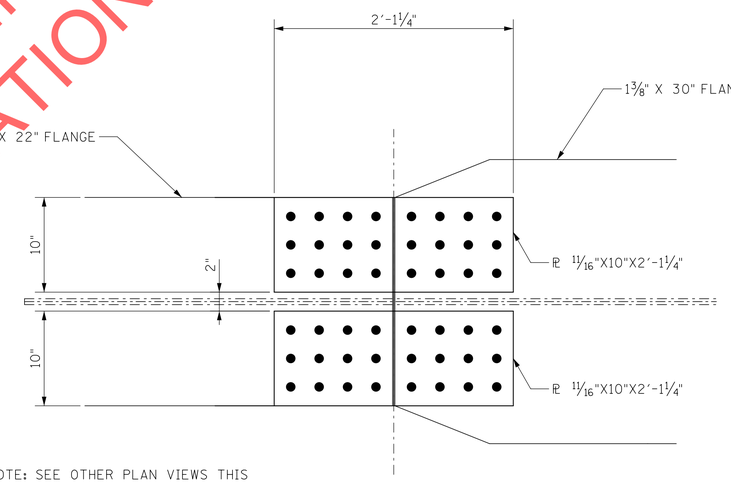

NOTE: SEE OTHER PLAN VIEWS THIS SHEET FOR BOLT SPACING AND DETAILS

PLAN OF INNER SPLICE PLATE
(TYPICAL TOP & BOTTOM FLANGE)

VOID FOR BIDDING
FOR INFORMATION ONLY

COORDINATES ARE NAD 83(1983), ARE DATUM ADJUSTED BY THE FACTOR OF 1.000082257 AND TIED TO THE TGRN. ALL ELEVATIONS ARE REFERENCED TO THE NAVD 1988 WITH GEOID 2003.

SEALED BY

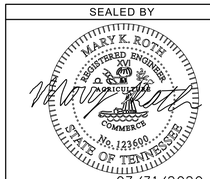

07/31/2020

HISTORIC FRANKLIN TENNESSEE

CITY OF FRANKLIN
ENGINEERING DEPARTMENT

TYPE I FIELD SPLICE

7/30/2020 4:11:47 PM
Y:\Nashville\16019000S\16019033.00\Eng_Docs\Structures\DGN\Final Plans\SE Park_Structural Steel Details 3_TYPE 1 Splice.dgn

TYPE	YEAR	PROJECT NO.	SHEET NO.
CONST.	2020	COF# 2019-0098	B15

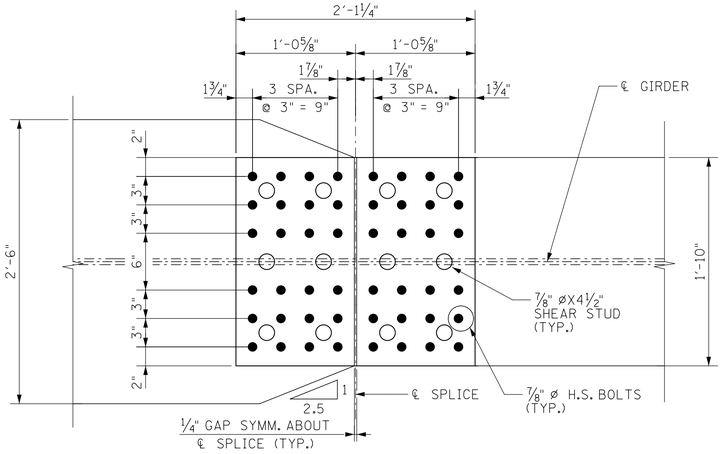

PLAN (TOP OF TOP FLANGE)

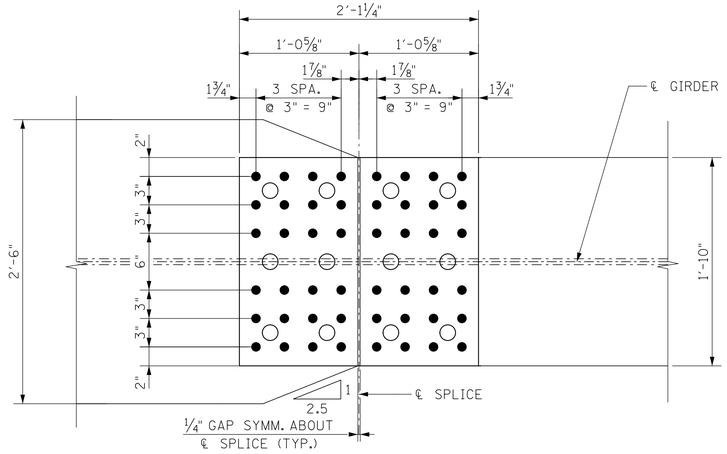

PLAN (BOTTOM OF BOTTOM FLANGE)

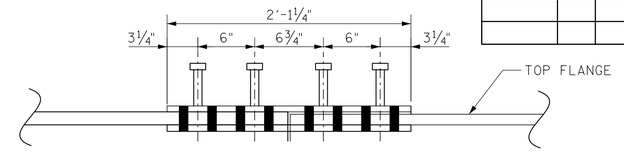

ELEVATION SHOWING SHEAR CONNECTORS

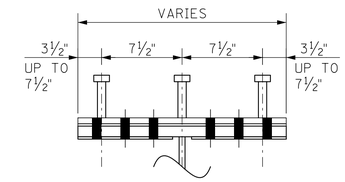

SECTION SHOWING SHEAR CONNECTORS

NOTE: SHEAR STUDS ARE TO BE SHOP WELDED ON TOP OF SPLICE PLATE BEFORE FIELD ASSEMBLY

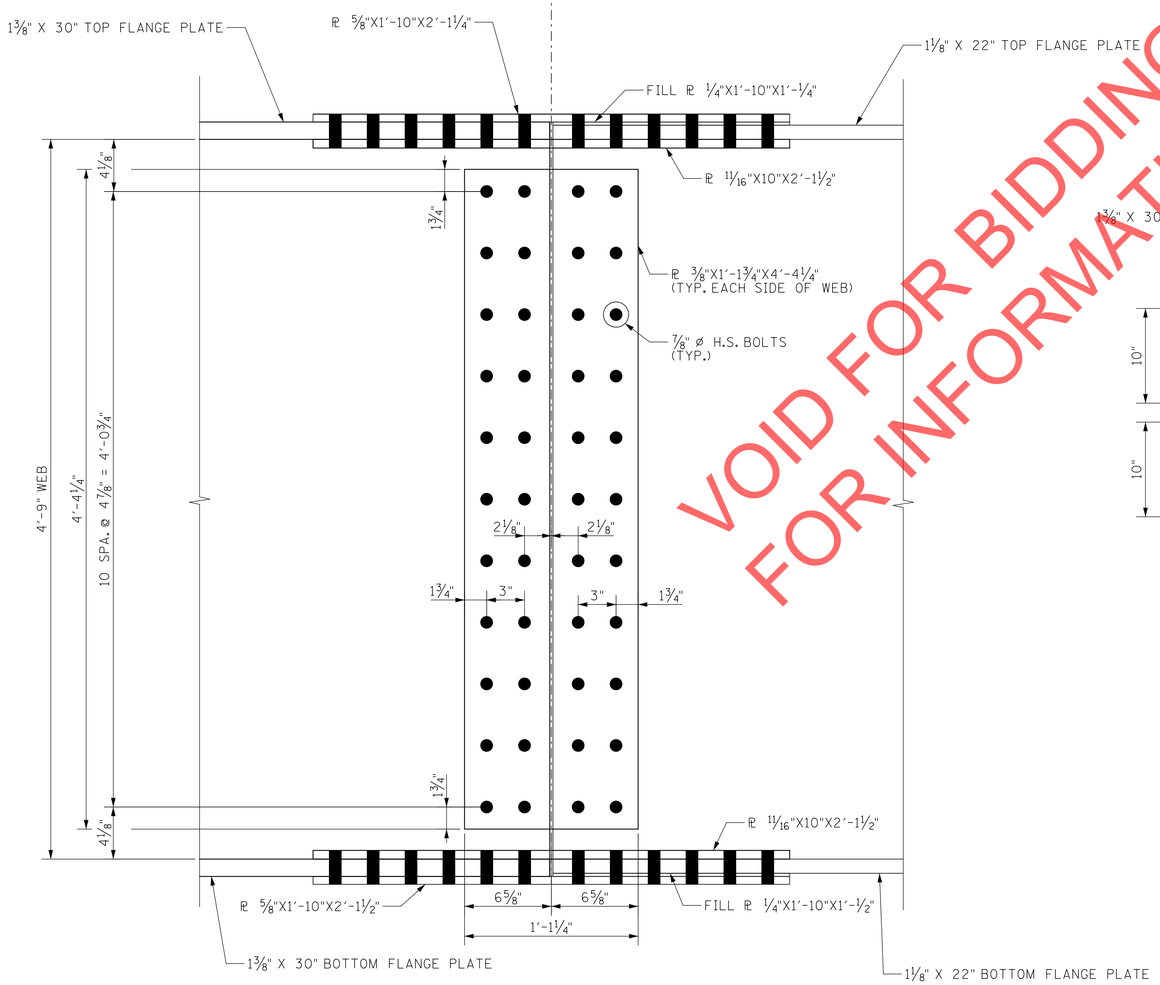

ELEVATION

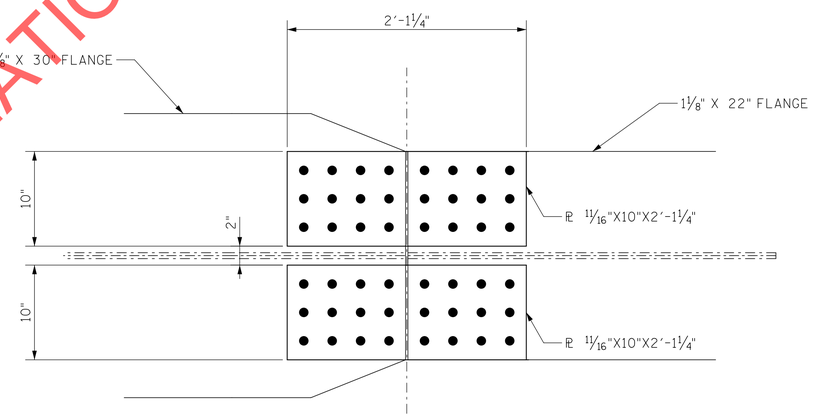

NOTE: SEE OTHER PLAN VIEWS THIS SHEET FOR BOLT SPACING AND DETAILS

PLAN OF INNER SPLICE PLATE
(TYPICAL TOP & BOTTOM FLANGE)

VOID FOR BIDDING
FOR INFORMATION ONLY

COORDINATES ARE NAD 83(1983), ARE DATUM ADJUSTED BY THE FACTOR OF 1.000082257 AND TIED TO THE TGRN. ALL ELEVATIONS ARE REFERENCED TO THE NAVD 1988 WITH GEOID 2003.

SEALED BY

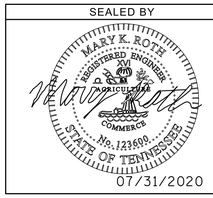

HISTORIC FRANKLIN TENNESSEE

CITY OF FRANKLIN
ENGINEERING DEPARTMENT

TYPE II FIELD SPLICE

7/30/2020 4:11:49 PM
Y:\Nashville\16019000S\16019033.00\Eng_Docs\Structures\DGN\Final Plans\SE Park_Structural Steel Details 4_TYPE 2 Splice.dgn

TYPE	YEAR	PROJECT NO.	SHEET NO.
CONST.	2020	COF# 2019-0098	B16

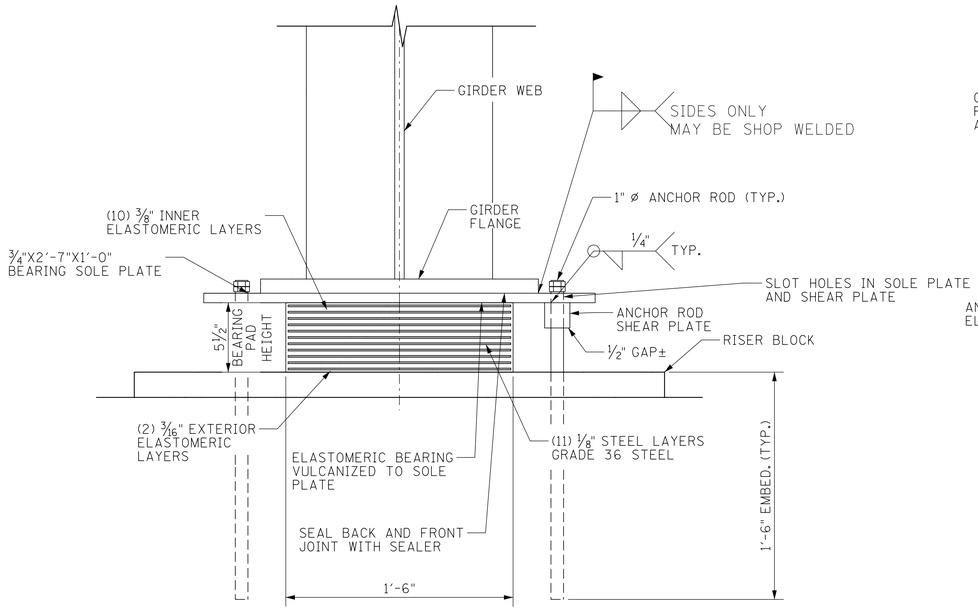

ELEVATION VIEW
TYPICAL AT ABUTMENTS

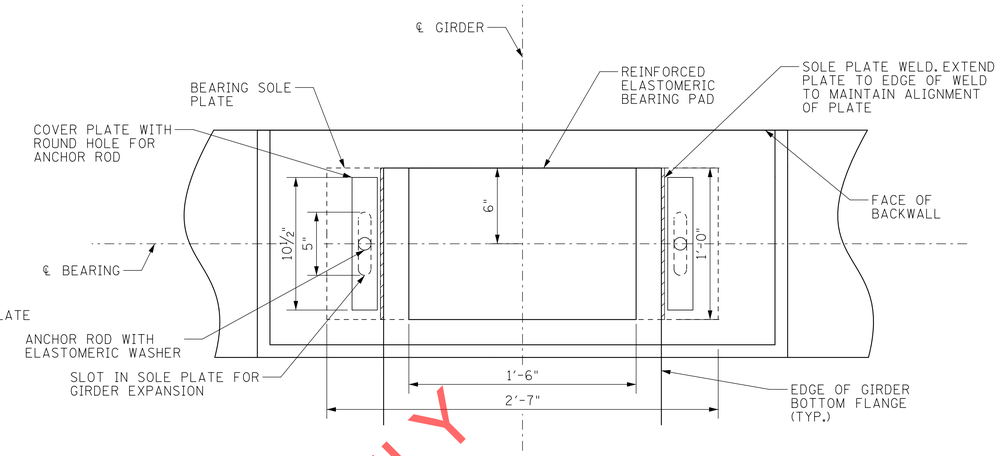

PLAN VIEW
TYPICAL AT ABUTMENTS

VOID FOR BIDDING
FOR INFORMATION ONLY

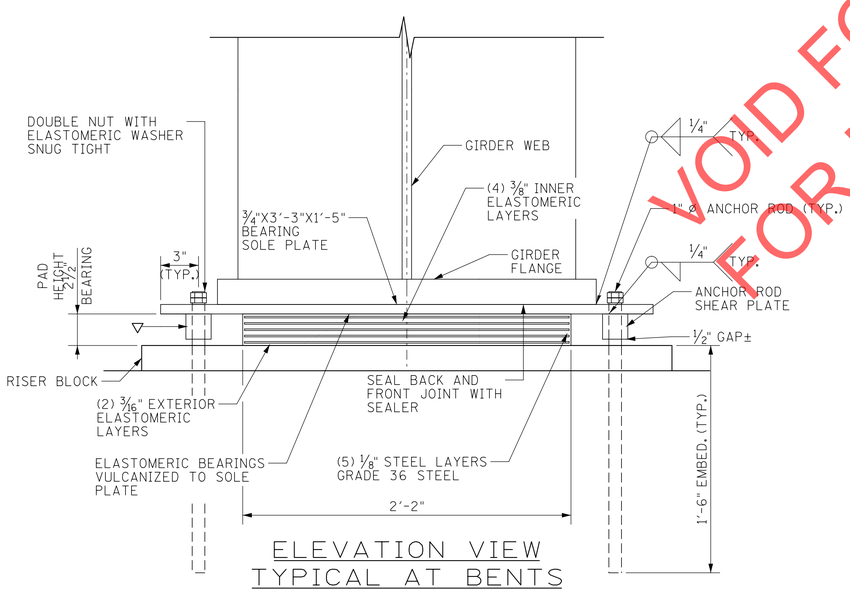

ELEVATION VIEW
TYPICAL AT BENTS

▽ DENOTES: 2"X2"X2" SHEAR PLATE WITH 1/4" WELD ALL AROUND (TYP.)

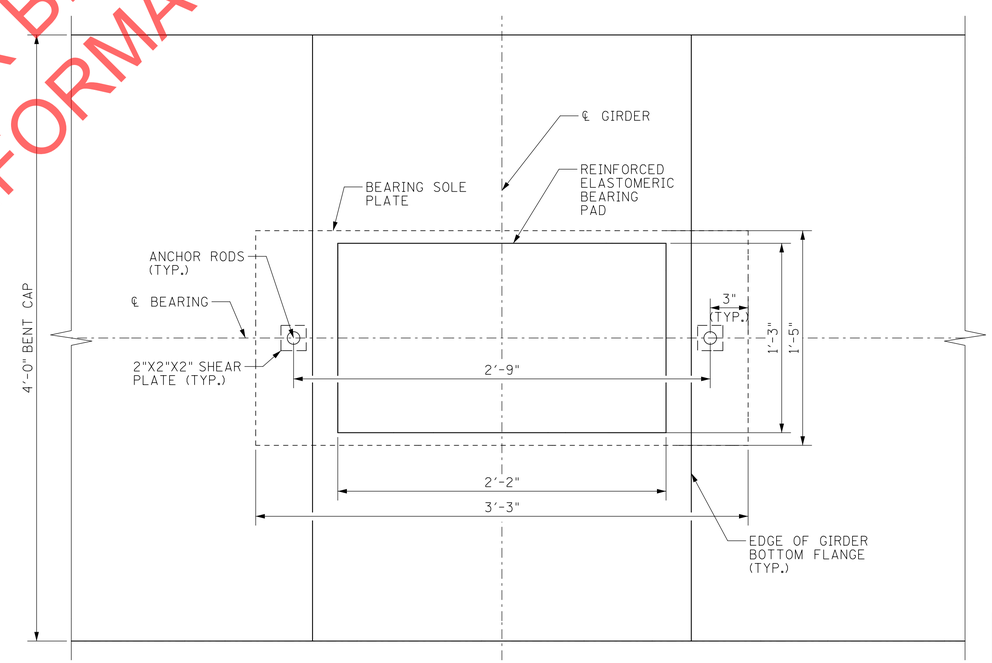

PLAN VIEW
TYPICAL AT BENTS

COORDINATES ARE NAD 83(1983), ARE DATUM ADJUSTED BY THE FACTOR OF 1.000082257 AND TIED TO THE TGRN. ALL ELEVATIONS ARE REFERENCED TO THE NAVD 1988 WITH GEOID 2003.

SEALED BY

HISTORIC FRANKLIN TENNESSEE

CITY OF FRANKLIN
ENGINEERING DEPARTMENT

BEARING DETAILS

7/30/2020 4:11:50 PM
Y:\Nashville\16019000S\16019033.00\Eng_Docs\Structures\DGN\Final Plans\SE Park_Bearing Details.dgn

TYPE	YEAR	PROJECT NO.	SHEET NO.
CONST.	2020	COF# 2019-0098	B17

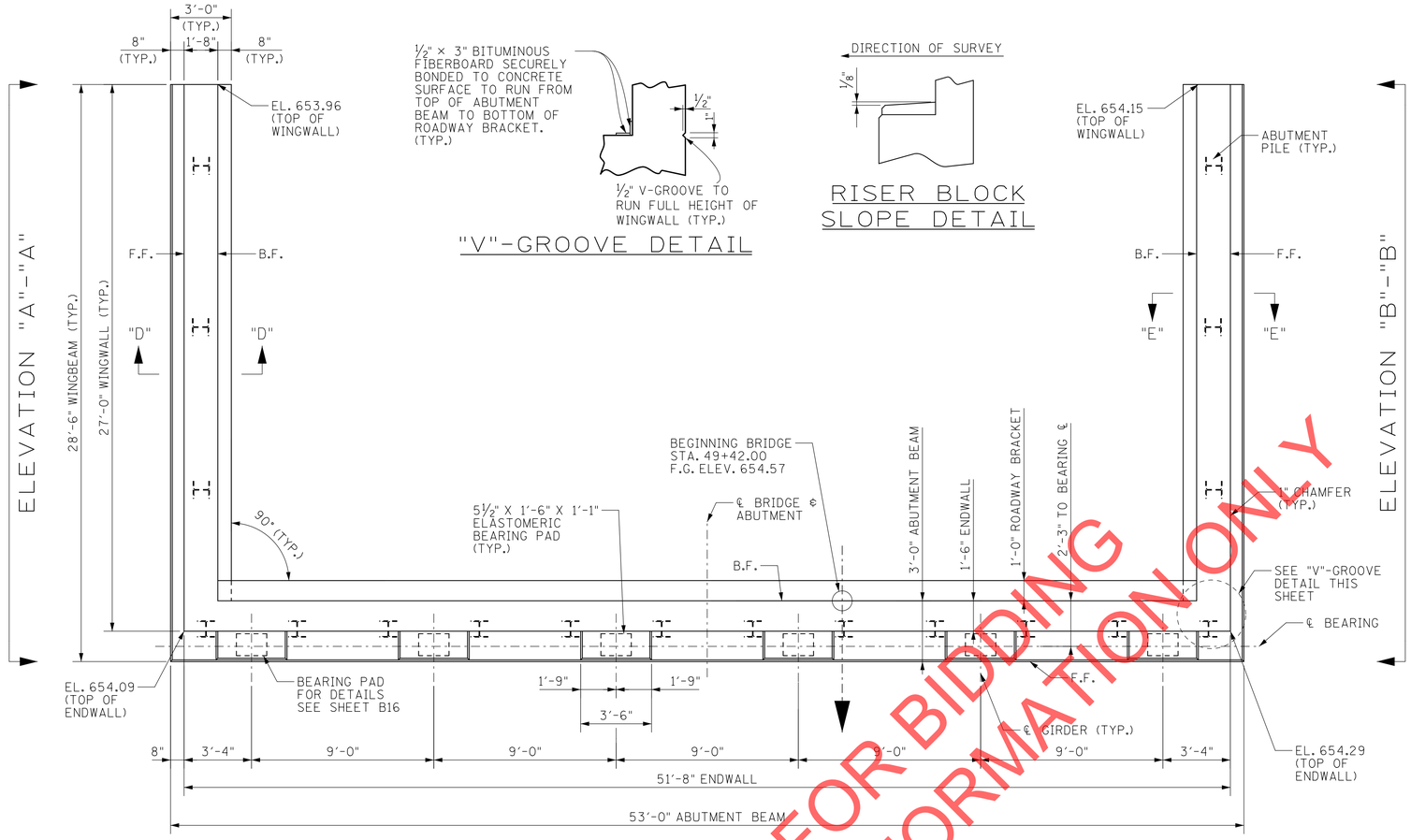

PLAN

"V"-GROOVE DETAIL

RISER BLOCK SLOPE DETAIL

NOTE: SEE SHEET B20 FOR ADDITIONAL DETAILS REGARDING REINFORCING FOR UTILITY BLOCKOUTS.

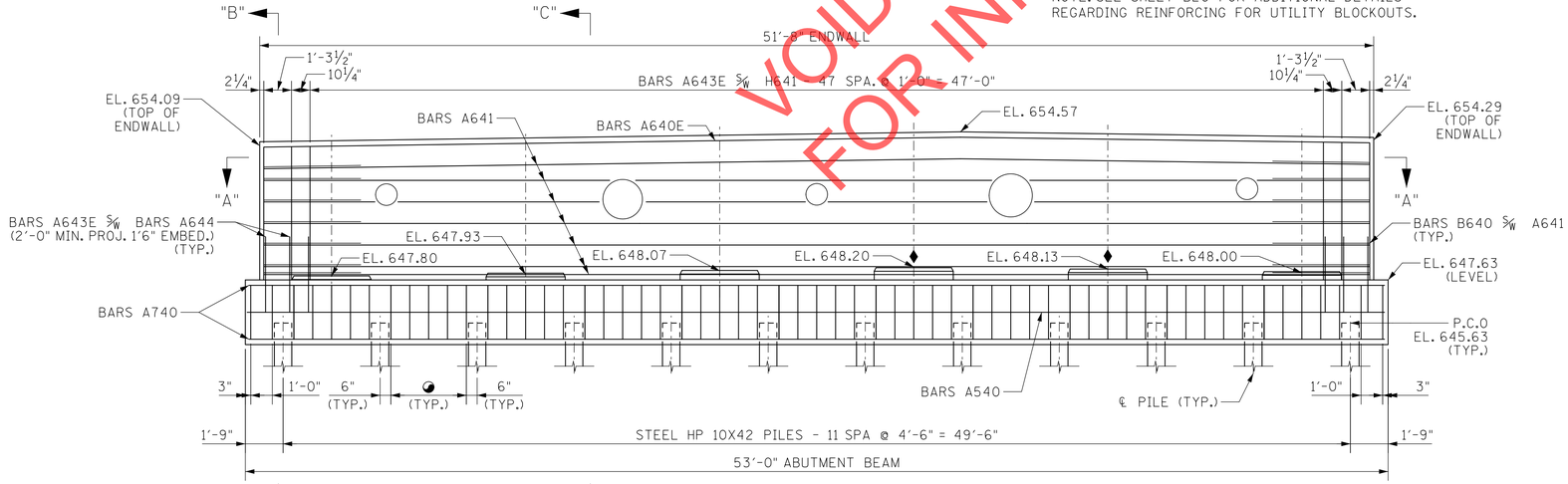

ELEVATION
(LOOKING BACK ON SURVEY)

◕ DENOTES: BARS L541
4 EQ SPA = 3'-6"
(TYP. BETWEEN PILES)

NOTE: RISER BLOCKS SHALL BE POURED MONOLITHICALLY WITH THE ABUTMENT BEAM.

NOTE: WHEN POURING WINGWALLS, PROVISIONS SHALL BE MADE FOR SETTING REINFORCING STEEL FOR BRIDGE RAIL. FOR DETAILS OF BRIDGE RAIL, SEE SHEET B28 THRU B31.

NOTE: THE GIRDERS SHALL BE IN PLACE PRIOR TO POURING THE ABUTMENT ENDWALL. AT LEAST THE TOP 12 INCHES OF THE ENDWALL SHALL BE POURED CONCURRENTLY WITH THE EXPANSION JOINT CLOSURE POUR.

NOTE: RISER BLOCK BEARING PAD SURFACES TO CONFORM TO BOTTOM OF BEAM GRADE.

NOTE: COST OF BRIDGE RAIL AND POST TO BE INCLUDED IN UNIT PRICE BID FOR THE BRIDGE RAIL SYSTEM.

NOTE: ELASTOMERIC PADS SHALL BE IN PLACE A MINIMUM OF ONE DAY BEFORE BEING DISTURBED BY SETTING BEAMS. PLACE RUBBER BONDING CEMENT IN SUCH A WAY THAT VISIBLE CONCRETE SURFACES WILL NOT BE STAINED. COST OF PADS AND RUBBER BONDING CEMENT SHALL BE INCLUDED IN UNIT PRICE BID FOR PAY ITEM 908-21.01, BEARINGS (ABUTMENT NOS. 1 & 2), EACH.

NOTE: SEE STANDARD DRAWING STD-6-1 FOR PILE DETAILS AND NOTES.

NOTE: WINGBEAM PILES SHALL BE DRIVEN TO REFUSAL.

ESTIMATED QUANTITIES

CLASS "A" CONCRETE C.Y.	EPOXY COATED REINFORCING STEEL LB.	STEEL BAR REINFORCEMENT LB.
78	3882	7808

BARS TO BE CUT IN FIELD TO ACCOMMODATE UTILITIES

COORDINATES ARE NAD 83(1983), ARE DATUM ADJUSTED BY THE FACTOR OF 1.000082257 AND TIED TO THE TGRN. ALL ELEVATIONS ARE REFERENCED TO THE NAVD 1988 WITH GEOID 2003.

SEALED BY

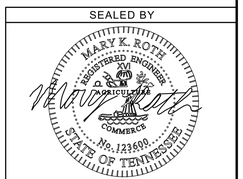

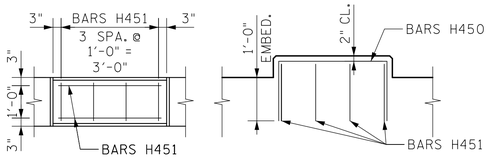

PLAN ELEVATION

REINFORCED RISER BLOCK DETAIL

♦ DENOTES RISER BLOCK TO BE REINFORCED

HISTORIC FRANKLIN TENNESSEE

CITY OF FRANKLIN
ENGINEERING DEPARTMENT

ABUTMENT NO. 1

VOID FOR BIDDING
FOR INFORMATION ONLY

7/30/2020 4:11:52 PM
Y:\Nashville\16019000S\16019033.00\Eng_Docs\Structures\DGN\Final Plans\SE Park_Abutment No1.dgn

TYPE	YEAR	PROJECT NO.	SHEET NO.
CONST.	2020	COF# 2019-0098	B18

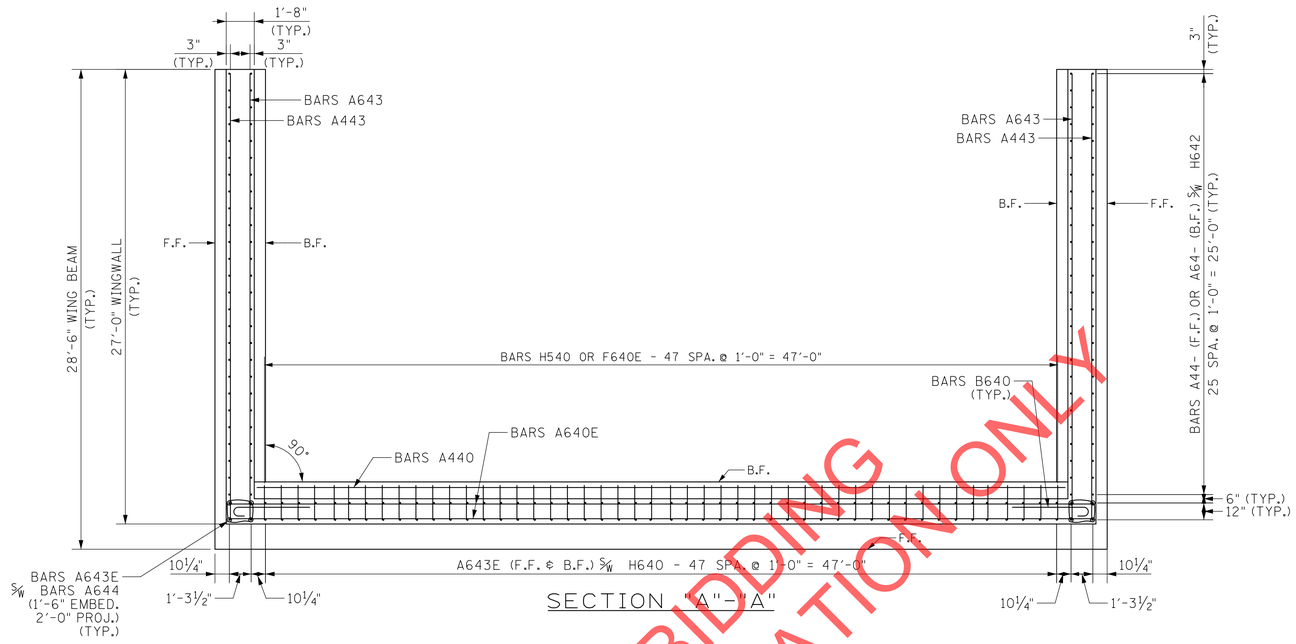

SECTION "A"-"A"

BARS TO BE CUT IN FIELD TO ACCOMMODATE UTILITIES

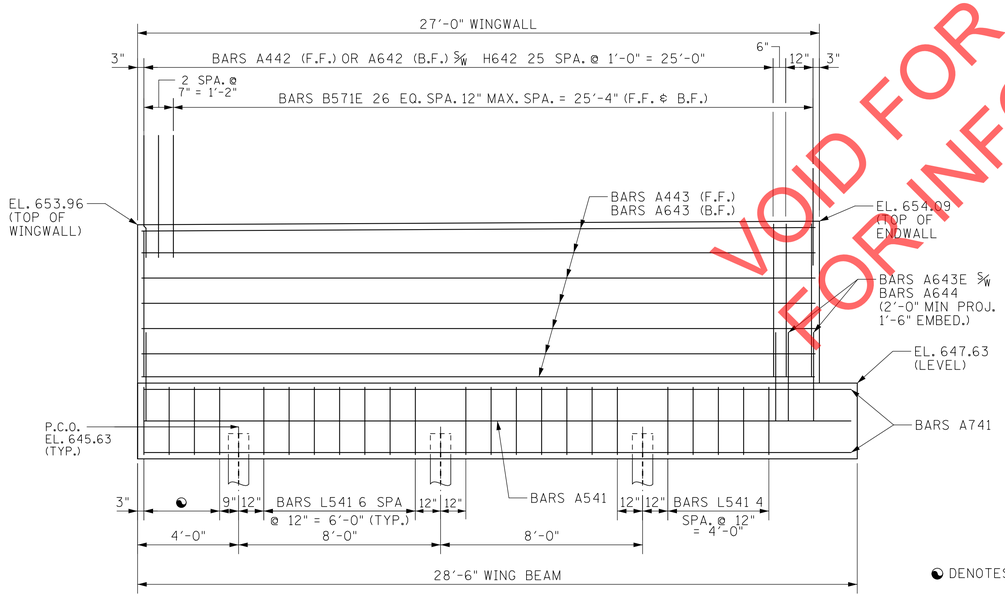

ELEVATION "A"-"A"

DENOTES: BARS L541 3 SPA @ 1'-0" = 3'-0"

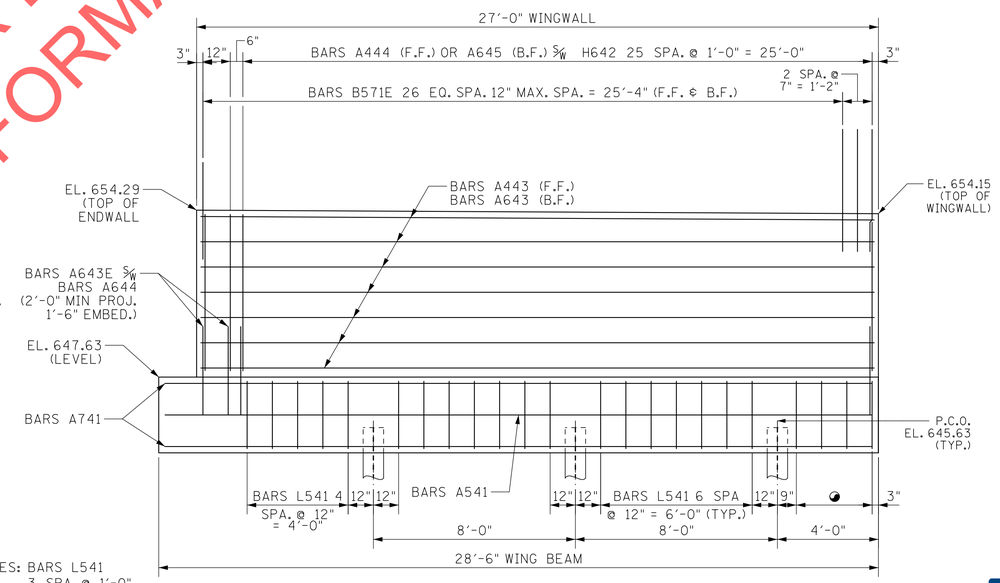

ELEVATION "B"-"B"

COORDINATES ARE NAD 83(1983), ARE DATUM ADJUSTED BY THE FACTOR OF 1.000082257 AND TIED TO THE TGRN. ALL ELEVATIONS ARE REFERENCED TO THE NAVD 1988 WITH GEOID 2003.

SEALED BY

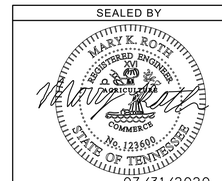

VOID FOR BIDDING
FOR INFORMATION ONLY

HISTORIC FRANKLIN TENNESSEE

CITY OF FRANKLIN
ENGINEERING DEPARTMENT

ABUTMENT NO. 1
DETAILS

7/30/2020 4:11:53 PM
Y:\Nashville\16019000S\16019033.00\Eng_Docs\Structures\DGN\Final Plans\SE Park_Abutment No1 Details.dgn

TYPE	YEAR	PROJECT NO.	SHEET NO.
CONST.	2020	COF# 2019-0098	B19

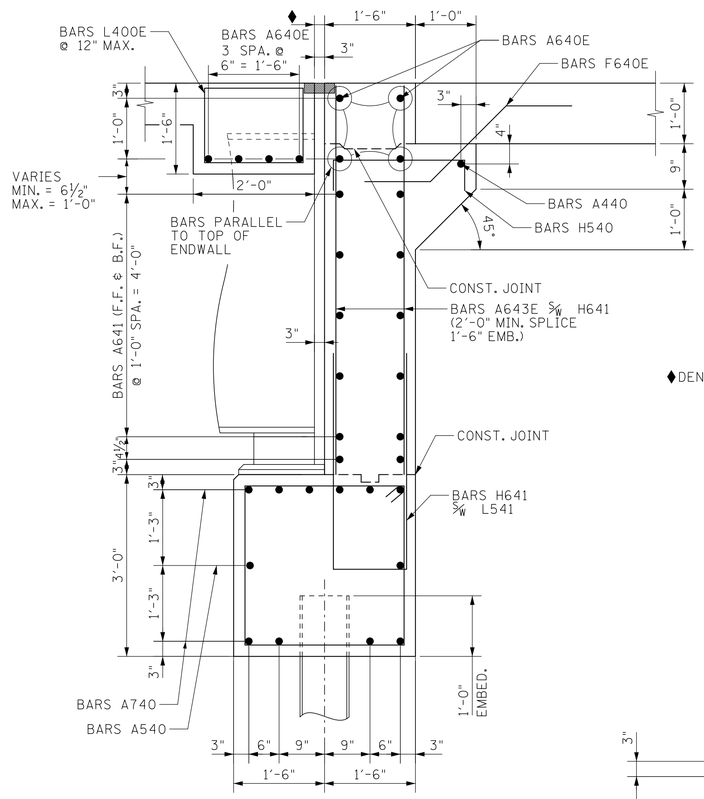

SECTION "B"-"B"

◆DENOTES: STRIP SEAL EXPANSION JOINT WITH 4" MOVEMENT CAPACITY

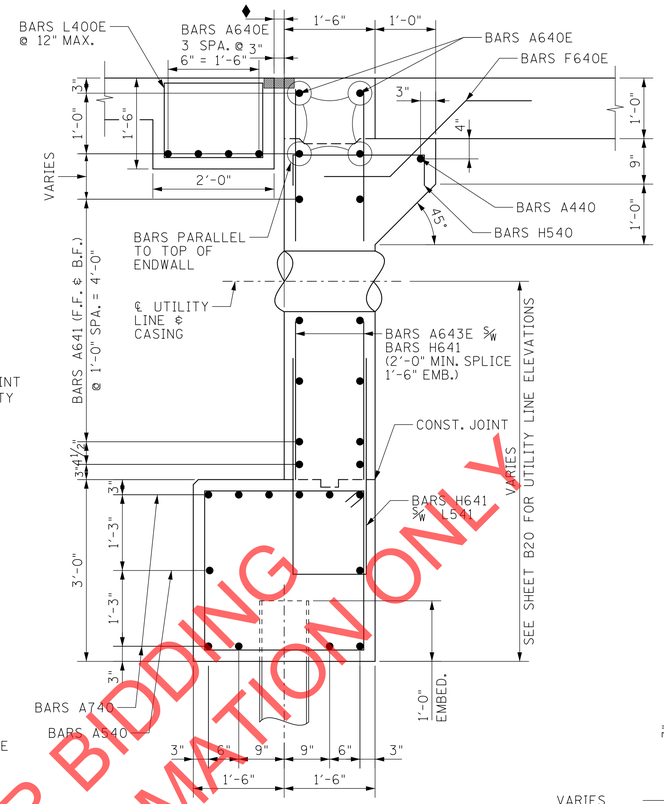

SECTION "C"-"C"
(TYPICAL AT UTILITY LOCATION)

NOTE: CONTRACTOR SHALL FIELD CUT OR ADJUST BARS CONFLICTING WITH OPENING FOR UTILITY CASING

NOTE: SEE STANDARD DRAWINGS STD-3-1 AND STD-3-2 FOR DETAILS OF STRIPSEAL EXPANSION JOINT

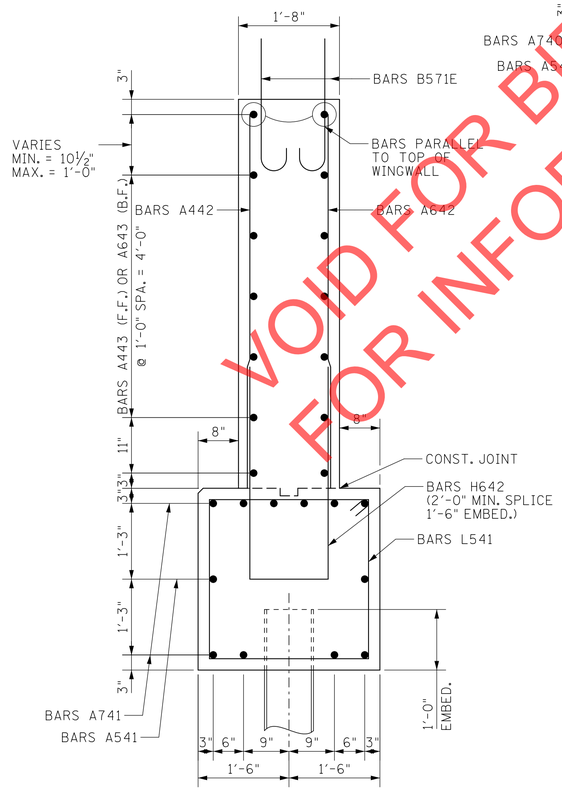

SECTION "D"-"D"

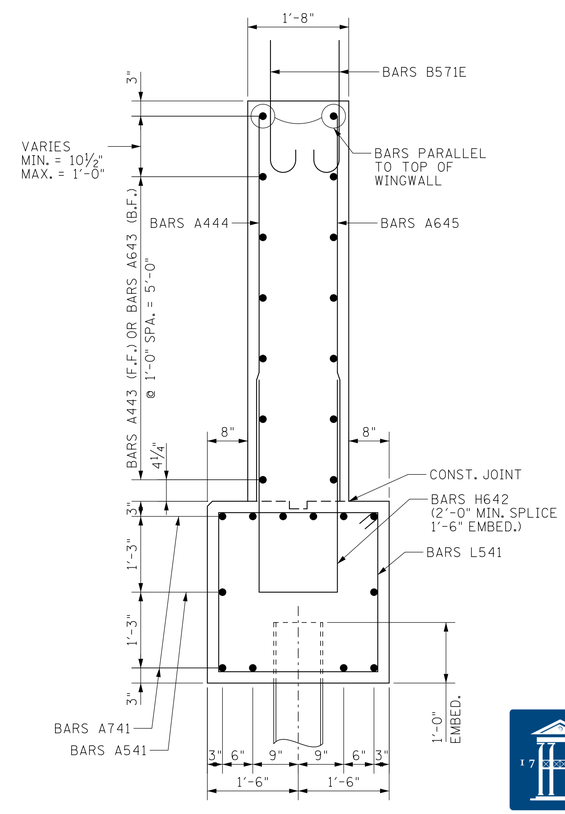

SECTION "E"-"E"

COORDINATES ARE NAD 83(1983), ARE DATUM ADJUSTED BY THE FACTOR OF 1.000082257 AND TIED TO THE TGRN. ALL ELEVATIONS ARE REFERENCED TO THE NAVD 1988 WITH GEOID 2003.

SEALED BY

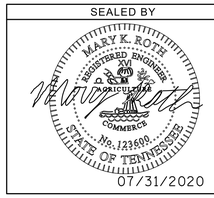

HISTORIC FRANKLIN TENNESSEE

CITY OF FRANKLIN
ENGINEERING DEPARTMENT

ABUTMENT NO. 1
SECTIONS

VOID FOR BIDDING
FOR INFORMATION ONLY

7/30/2020 4:11:54 PM
Y:\Nashville\16019000S\16019033.00\Eng_Docs\Structures\DGN\Final Plans\SE Park_Abutment No1 Sections.dgn

TYPE	YEAR	PROJECT NO.	SHEET NO.
CONST.	2020	COF# 2019-0098	B20

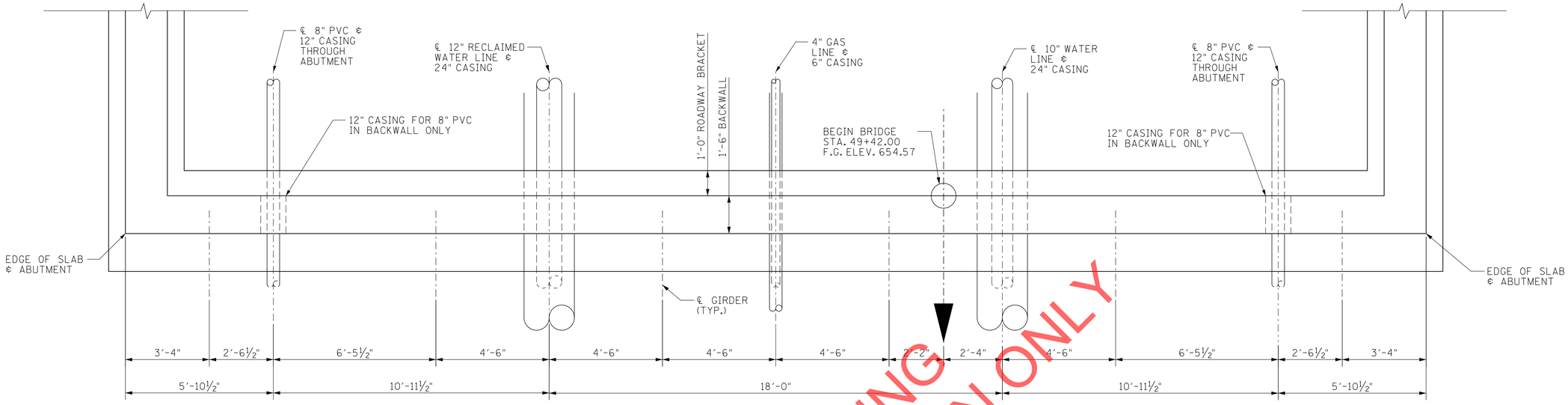

ABUTMENT 1 BLOCKOUT LOCATIONS - PLAN

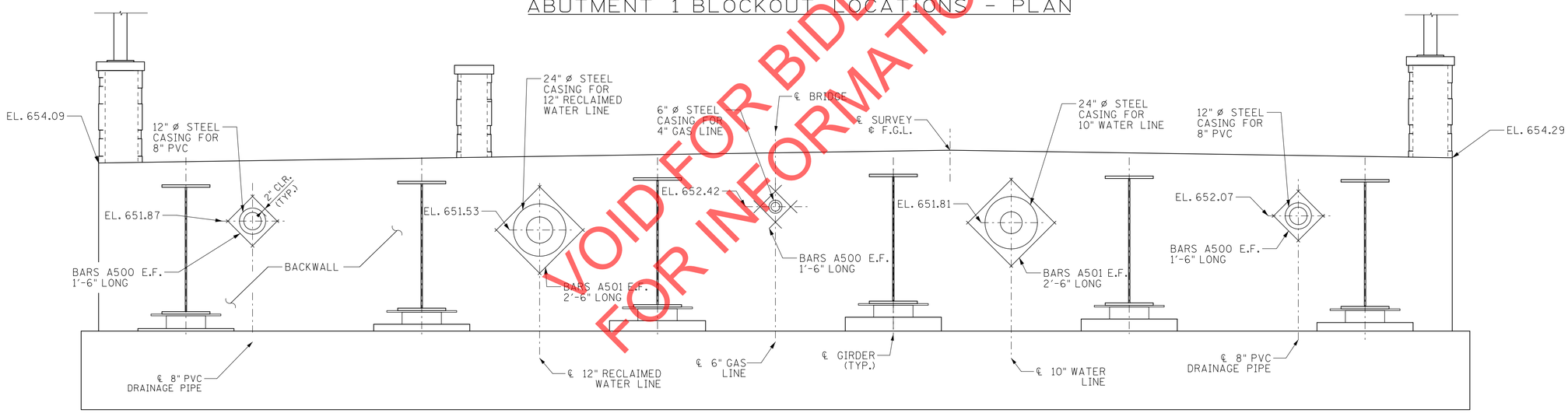

VOID FOR BIDDING
FOR INFORMATION ONLY

NOTES:

1. FOR BACKWALL REINFORCING DETAILS, SEE SHEET B21.
2. CONTRACTOR SHALL COORDINATE WITH APPROPRIATE UTILITY COMPANIES CONCERNING TIE-IN LOCATIONS FOR CASING THROUGH ABUTMENT BACKWALLS FOR EACH UTILITY LINE. UTILITY OWNER CONTACT INFORMATION SHOWN ON SHEET B2.
3. CASING FOR 8" PVC DRAIN PIPE IS THROUGH ABUTMENT BACKWALL ONLY. DRAIN PIPE TO TIE INTO ROADWAY CATCH BASIN. SEE ROADWAY PLANS FOR DETAILS.
4. CASING FOR WATER LINES AND GAS LINE SHALL EXTEND 5'-0" PAST ABUTMENT BACKWALL.
5. SEE ROADWAY UTILITY SHEETS FOR UTILITY DETAILS AND NOTES.

ABUTMENT 1 BLOCKOUTS LOCATIONS - ELEVATION

(LOOKING BACK ON SURVEY)

NOTE: REINFORCING STEEL IN CONFLICT WITH STEEL CASING SHALL BE ADJUSTED IN THE FIELD AS DIRECTED BY THE ENGINEER. REINFORCING MAY BE CUT IN FIELD

COORDINATES ARE NAD 83(1983), ARE DATUM ADJUSTED BY THE FACTOR OF 1.000082257 AND TIED TO THE TGRN. ALL ELEVATIONS ARE REFERENCED TO THE NAVD 1988 WITH GEOID 2003.

SEALED BY

MARY K. ROTH REGISTERED ENGINEER No. 123699 STATE OF TENNESSEE

07/31/2020

HISTORIC FRANKLIN TENNESSEE

CITY OF FRANKLIN
ENGINEERING DEPARTMENT

ABUTMENT NO. 1
BLOCKOUT DETAILS

7/30/2020 4:11:57 PM
Y:\Nashville\16019000S\16019033.00\Eng_Docs\Structures\DGN\Final Plans\SE Park_Abutment No1 Blockout Details 1.dgn

TYPE	YEAR	PROJECT NO.	SHEET NO.
CONST.	2020	COF# 2019-0098	B21

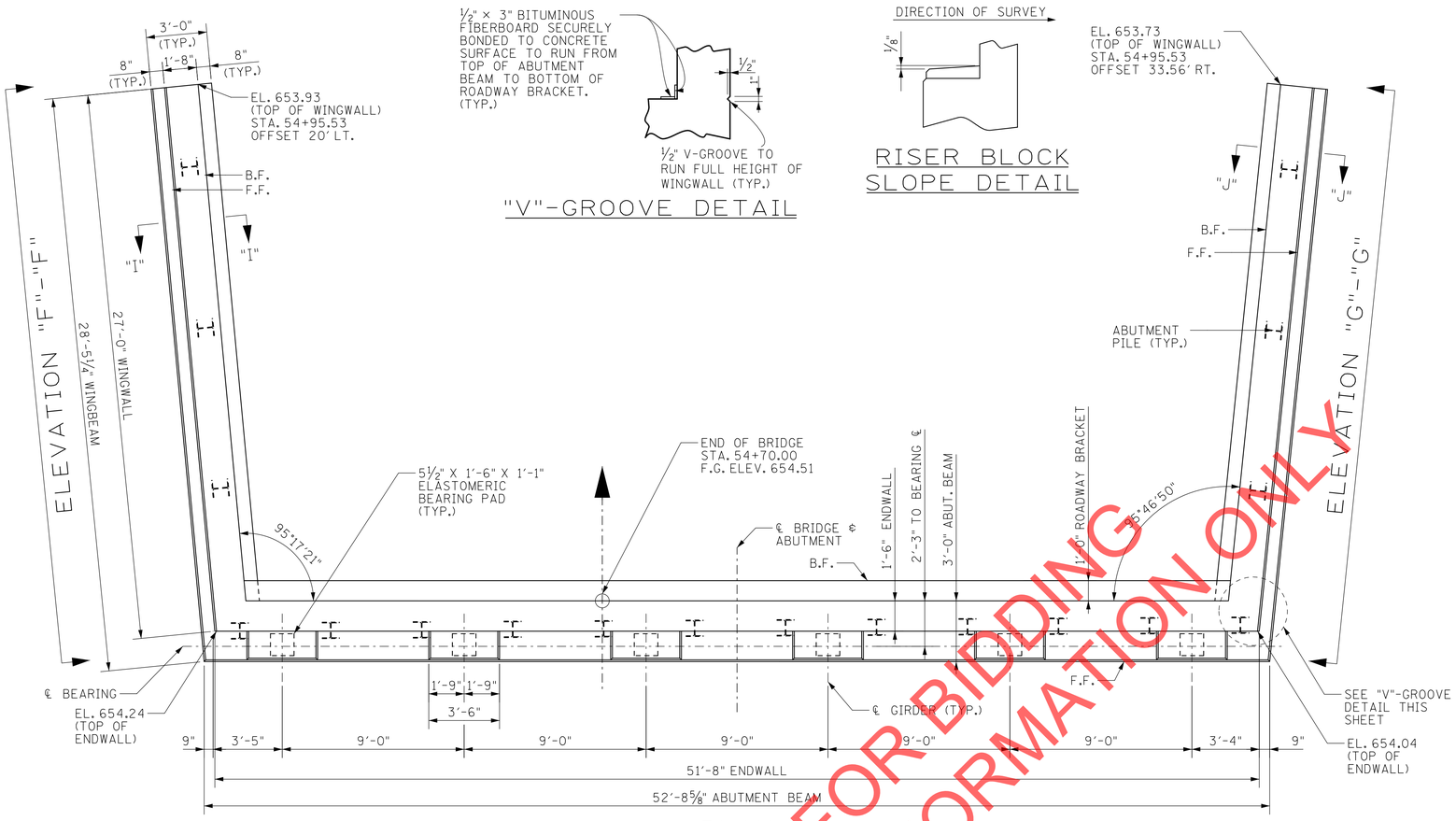

PLAN

"V"-GROOVE DETAIL

RISER BLOCK SLOPE DETAIL

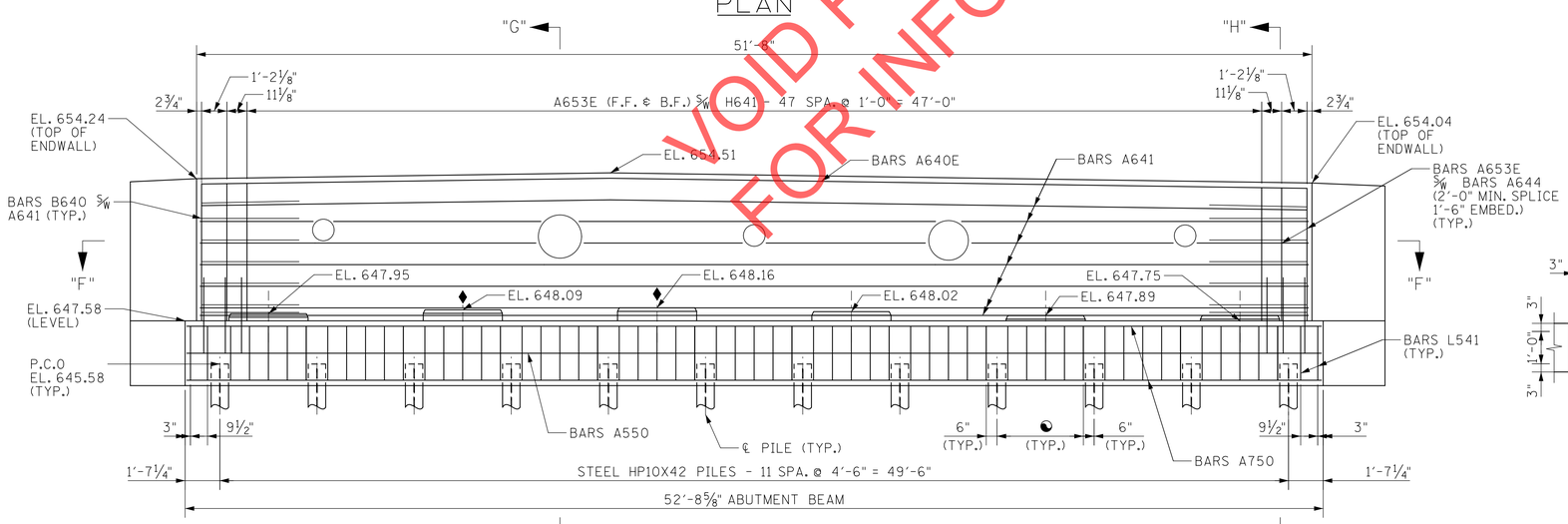

ELEVATION

◐ DENOTES: BARS L541
4 EQ SPA = 3'-6"
(TYP. BETWEEN PILES)

NOTE: RISER BLOCKS SHALL BE POURED MONOLITHICALLY WITH THE ABUTMENT BEAM.

NOTE: WHEN POURING WINGWALLS, PROVISIONS SHALL BE MADE FOR SETTING REINFORCING STEEL FOR BRIDGE RAIL. FOR DETAILS OF BRIDGE RAIL, SEE SHEET B28 THRU B31.

NOTE: THE GIRDERS SHALL BE IN PLACE PRIOR TO POURING THE ABUTMENT ENDWALL. AT LEAST THE TOP 12 INCHES OF THE ENDWALL SHALL BE POURED CONCURRENTLY WITH THE EXPANSION JOINT CLOSURE POUR.

NOTE: RISER BLOCK BEARING PAD SURFACES TO CONFORM TO BOTTOM OF BEAM GRADE.

NOTE: COST OF BRIDGE RAIL AND POST TO BE INCLUDED IN UNIT PRICE BID FOR THE BRIDGE RAIL SYSTEM.

NOTE: ELASTOMERIC PADS SHALL BE IN PLACE A MINIMUM OF ONE DAY BEFORE BEING DISTURBED BY SETTING BEAMS. PLACE RUBBER BONDING CEMENT IN SUCH A WAY THAT VISIBLE CONCRETE SURFACES WILL NOT BE STAINED. COST OF PADS AND RUBBER BONDING CEMENT SHALL BE INCLUDED IN UNIT PRICE BID FOR PAY ITEM 908-21.01, BEARINGS (ABUTMENT NOS. 1 & 2), EACH.

NOTE: SEE STANDARD DRAWING STD-6-1 FOR PILE DETAILS AND NOTES.

NOTE: WINGBEAM PILES SHALL BE DRIVEN TO REFUSAL.

ESTIMATED QUANTITIES

CLASS "A" CONCRETE C.Y.	EPOXY COATED REINFORCING STEEL LB.	STEEL BAR REINFORCEMENT LB.
78	3882	7770

BARS TO BE CUT IN FIELD TO ACCOMMODATE UTILITIES

COORDINATES ARE NAD 83(1983), ARE DATUM ADJUSTED BY THE FACTOR OF 1.000082257 AND TIED TO THE TGRN. ALL ELEVATIONS ARE REFERENCED TO THE NAVD 1988 WITH GEOID 2003.

SEALED BY

MARY K. ROTH REGISTERED ENGINEER AGRICULTURE COMMERCE No. 123609 STATE OF TENNESSEE

07/31/2020

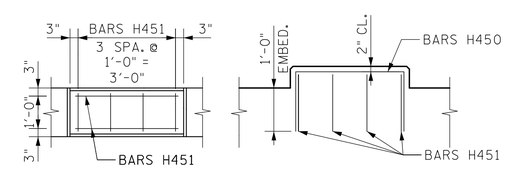

PLAN ELEVATION

REINFORCED RISER BLOCK DETAIL

♦ DENOTES RISER BLOCK TO BE REINFORCED

HISTORIC FRANKLIN TENNESSEE

CITY OF FRANKLIN
ENGINEERING DEPARTMENT

ABUTMENT NO. 2

VOID FOR BIDDING
FOR INFORMATION ONLY

7/30/2020 4:11:59 PM
Y:\Nashville\16019000S\16019033.00\Eng_Docs\Structures\DGN\Final Plans\SE Park_Abutment No2.dgn

TYPE	YEAR	PROJECT NO.	SHEET NO.
CONST.	2020	COF# 2019-0098	B22

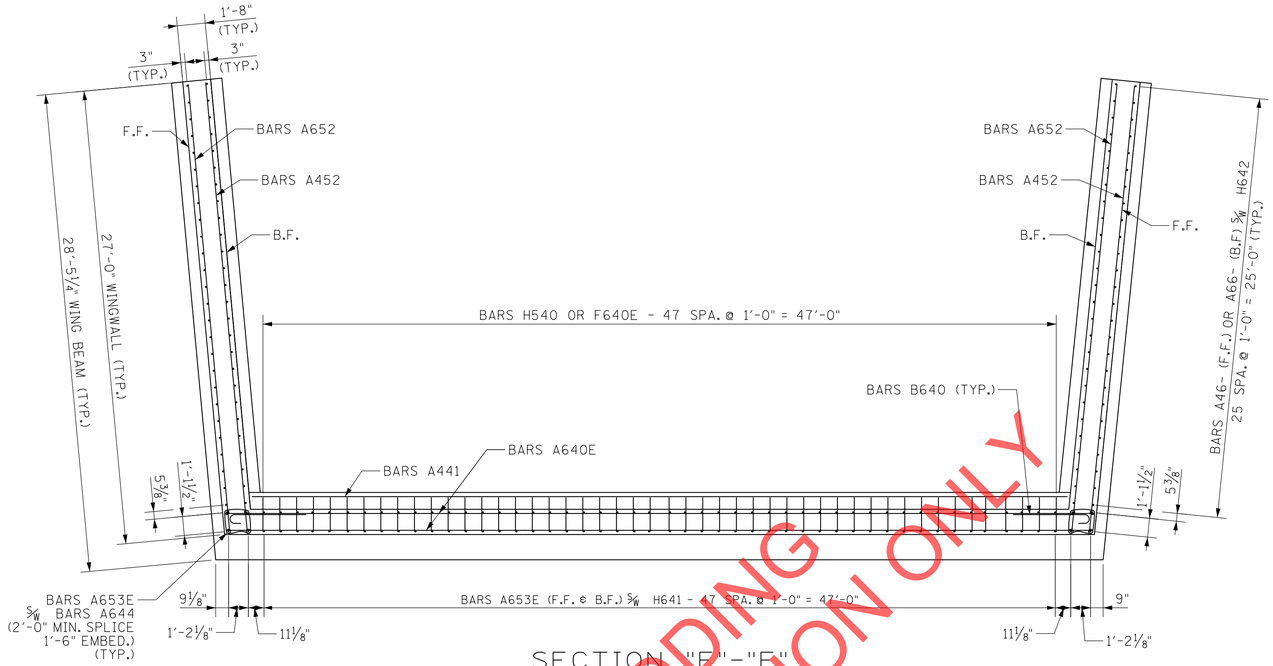

SECTION "E"-"E"

BARS TO BE CUT IN FIELD TO ACCOMMODATE UTILITIES

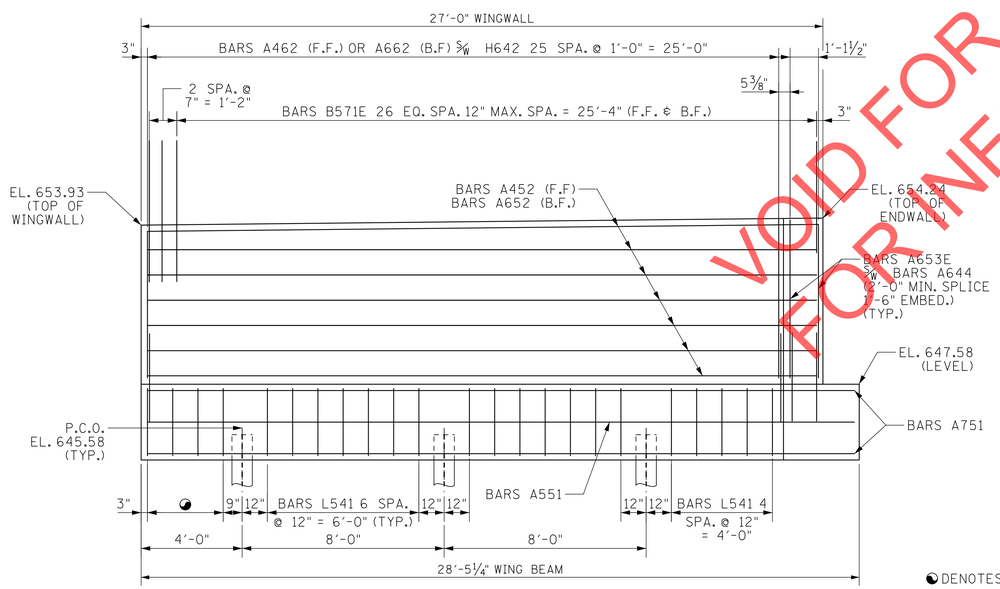

ELEVATION "F"-"F"

◐ DENOTES: BARS L541 3 SPA @ 1'-0" = 3'-0"

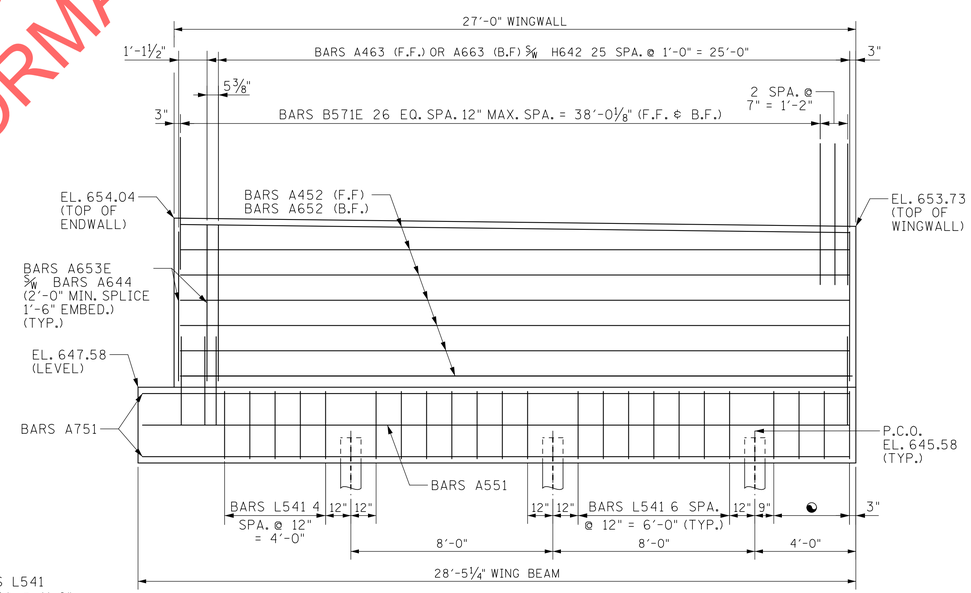

ELEVATION "G"-"G"

COORDINATES ARE NAD 83(1983), ARE DATUM ADJUSTED BY THE FACTOR OF 1.000082257 AND TIED TO THE TGRN. ALL ELEVATIONS ARE REFERENCED TO THE NAVD 1988 WITH GEOID 2003.

SEALED BY

MARY K. ROTH REGISTERED ENGINEER No. 123609 STATE OF TENNESSEE

07/31/2020

VOID FOR BIDDING FOR INFORMATION ONLY

HISTORIC FRANKLIN TENNESSEE

CITY OF FRANKLIN
ENGINEERING DEPARTMENT

ABUTMENT NO. 2 DETAILS

7/30/2020 4:12:00 PM
Y:\Nashville\16019000S\16019033.00\Eng_Docs\Structures\DGN\Final Plans\SE Park_Abutment No2 Details.dgn

TYPE	YEAR	PROJECT NO.	SHEET NO.
CONST.	2020	COF# 2019-0098	B23

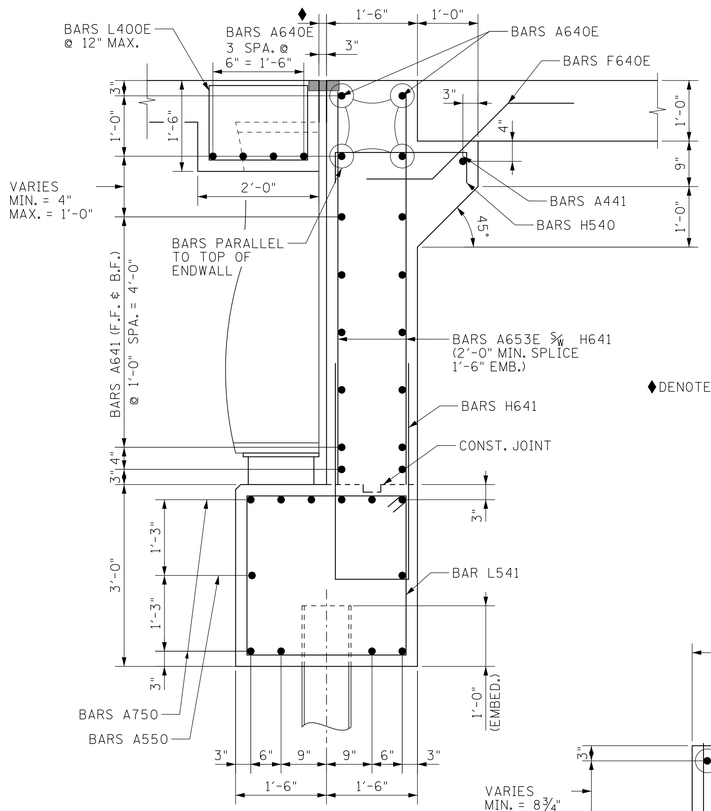

SECTION "H"-"H"

♦DENOTES: STRIP SEAL EXPANSION JOINT WITH 4" MOVEMENT CAPACITY

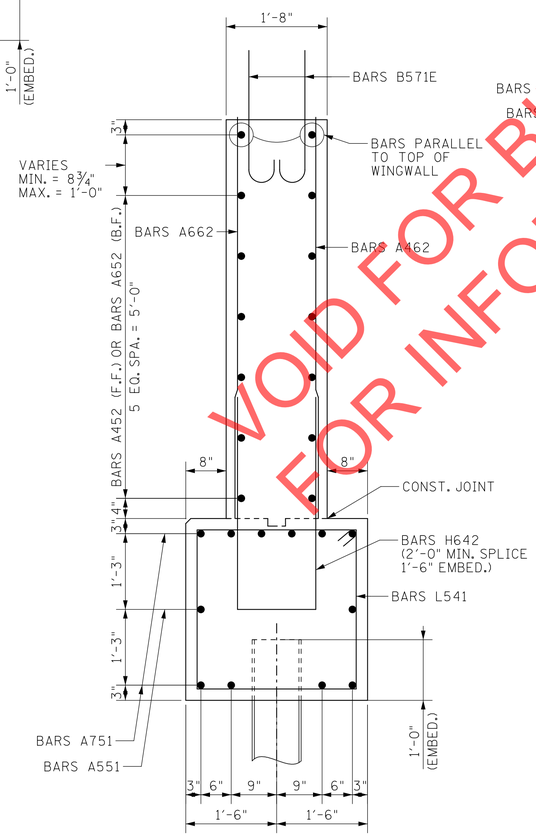

SECTION "I"-"I"

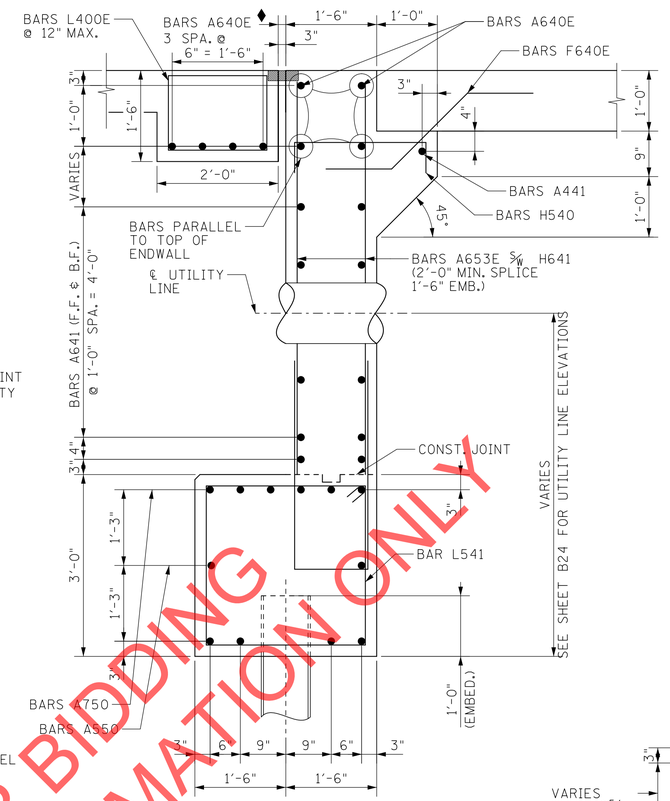

SECTION "G"-"G"
(TYPICAL AT UTILITY LOCATION)

NOTE: CONTRACTOR SHALL FIELD CUT OR ADJUST BARS CONFLICTING WITH OPENING FOR UTILITY CASING

NOTE: SEE STANDARD DRAWINGS STD-3-1 AND STD-3-2 FOR DETAILS OF STRIPSEAL EXPANSION JOINT

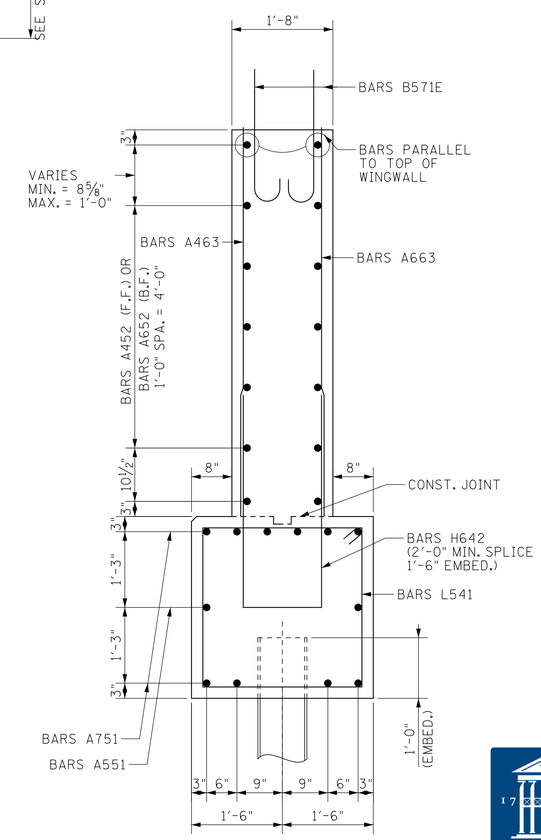

SECTION "J"-"J"

COORDINATES ARE NAD 83(1983), ARE DATUM ADJUSTED BY THE FACTOR OF 1.000082257 AND TIED TO THE TGRN. ALL ELEVATIONS ARE REFERENCED TO THE NAVD 1988 WITH GEOID 2003.

SEALED BY

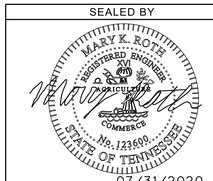

HISTORIC FRANKLIN TENNESSEE

CITY OF FRANKLIN
ENGINEERING DEPARTMENT

ABUTMENT NO. 2
SECTIONS

VOID FOR BIDDING
FOR INFORMATION ONLY

7/30/2020 4:12:02 PM
Y:\Nashville\16019000S\16019033.00\Eng_Docs\Structures\DGN\Final Plans\SE Park_Abutment No2 Sections.dgn

TYPE	YEAR	PROJECT NO.	SHEET NO.
CONST.	2020	COF# 2019-0098	B24

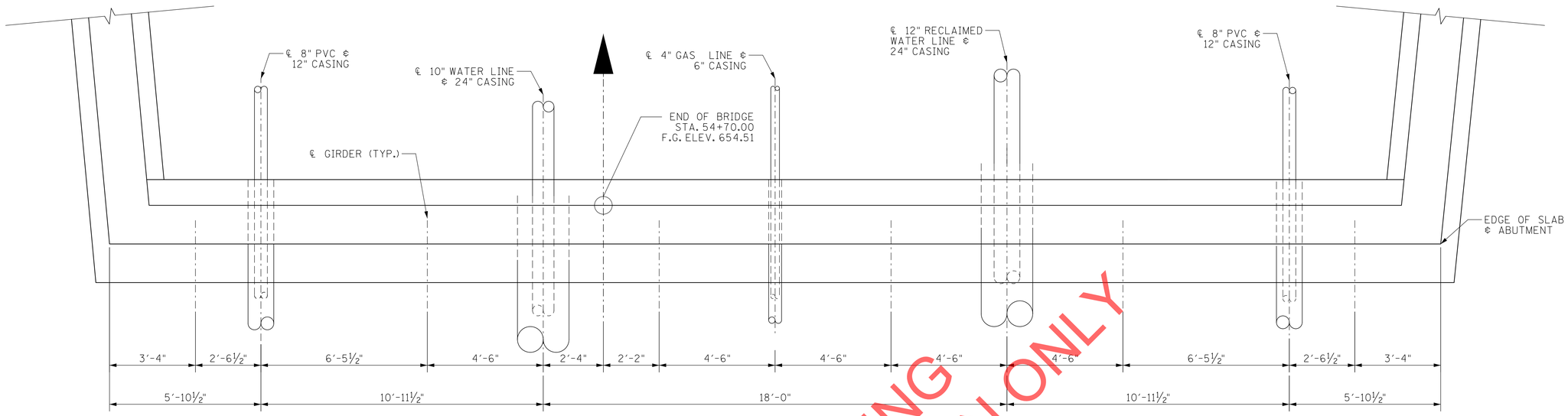

ABUTMENT 2 BLOCKOUT LOCATIONS - PLAN

VOID FOR BIDDING
FOR INFORMATION ONLY

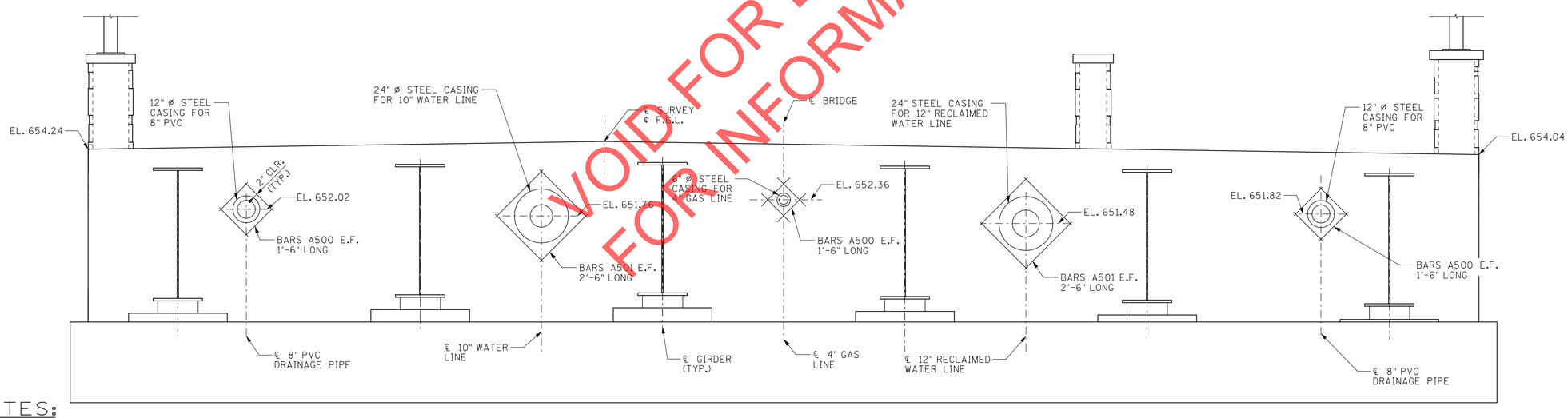

ABUTMENT 2 BLOCKOUT LOCATIONS - ELEVATION

(LOOKING FORWARD ON SURVEY)

NOTE: REINFORCING STEEL IN CONFLICT WITH STEEL CASING SHALL BE ADJUSTED IN THE FIELD AS DIRECTED BY THE ENGINEER. REINFORCING MAY BE CUT IN FIELD

COORDINATES ARE NAD 83(1983), ARE DATUM ADJUSTED BY THE FACTOR OF 1.000082257 AND TIED TO THE TGRN. ALL ELEVATIONS ARE REFERENCED TO THE NAVD 1988 WITH GEOID 2003.

SEALED BY

MARY K. ROTH REGISTERED ENGINEER No. 123698 STATE OF TENNESSEE

07/31/2020

NOTES:

1. FOR BACKWALL REINFORCING DETAILS, SEE SHEET B21.
2. CONTRACTOR SHALL COORDINATE WITH APPROPRIATE UTILITY COMPANIES CONCERNING TIE-IN LOCATIONS FOR CASING THROUGH ABUTMENT BACKWALLS FOR EACH UTILITY LINE. UTILITY OWNER CONTACT INFORMATION SHOWN ON SHEET B2.
3. CASING FOR 8" PVC DRAIN PIPE IS THROUGH ABUTMENT BACKWALL ONLY. DRAIN PIPE TO TIE INTO ROADWAY CATCH BASIN. SEE ROADWAY PLANS FOR DETAILS.
4. CASING FOR WATER LINES AND GAS LINE SHALL EXTEND 5'-0" PAST ABUTMENT BACKWALL.
5. SEE ROADWAY UTILITY SHEETS FOR UTILITY DETAILS AND NOTES.

HISTORIC FRANKLIN TENNESSEE

CITY OF FRANKLIN
ENGINEERING DEPARTMENT

ABUTMENT NO. 2
BLOCKOUT DETAILS

7/30/2020 4:12:05 PM
Y:\Nashville\16019000S\16019033.00\Eng_Docs\Structures\DGN\Final Plans\SE Park_Abutment No2 Blockout Details 1.dgn

TYPE	YEAR	PROJECT NO.	SHEET NO.
CONST.	2020	COF# 2019-0098	B25

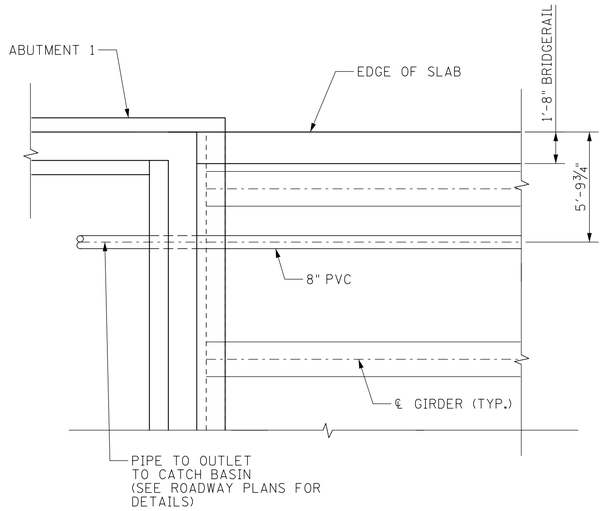

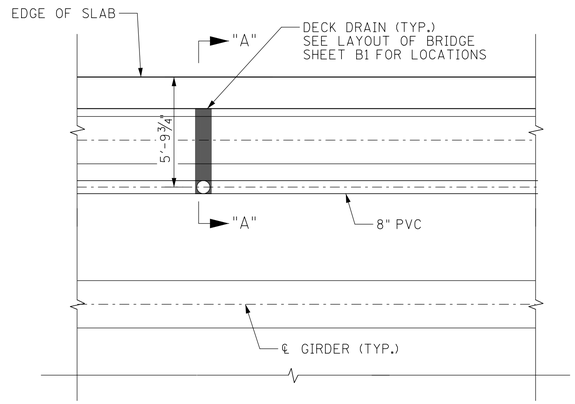

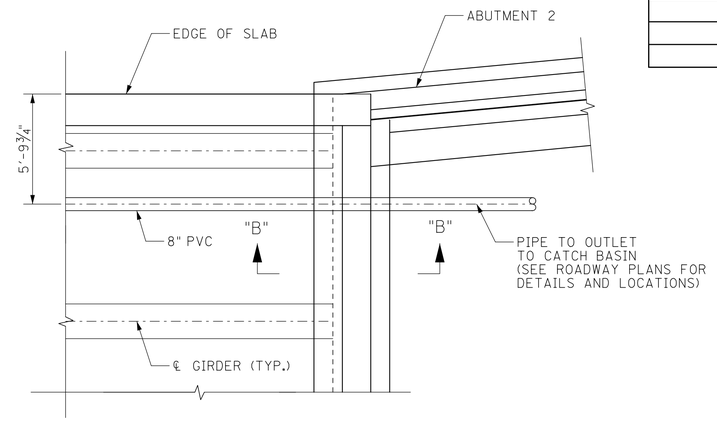

PLAN - LEFT SIDE OF BRIDGE

(LOOKING FORWARD ON SURVEY)
(RIGHT SIDE SYMMETRICAL ABOUT ℄ BRIDGE)

VOID FOR BIDDING
FOR INFORMATION ONLY

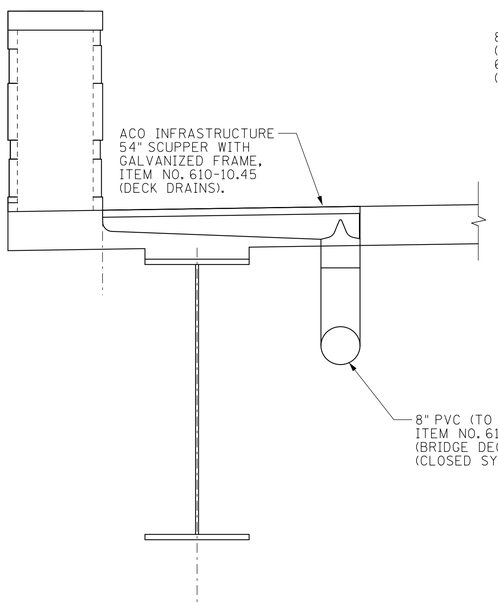

SECTION "A-A"

(SHOWING LEFT SIDE OF BRIDGE.
RIGHT SIDE SYMMETRICAL ABOUT ℄ BRIDGE)

NOTE: REINFORCING STEEL IN CONFLICT WITH DRAIN SYSTEM SHALL BE ADJUSTED IN THE FIELD AS DIRECTED BY THE ENGINEER. DECK REINFORCING MAY BE CUT IN FIELD. EPOXY COATED REINFORCING STEEL IS TO BE REPAINTED ACCORDING TO ASTM D-3963.

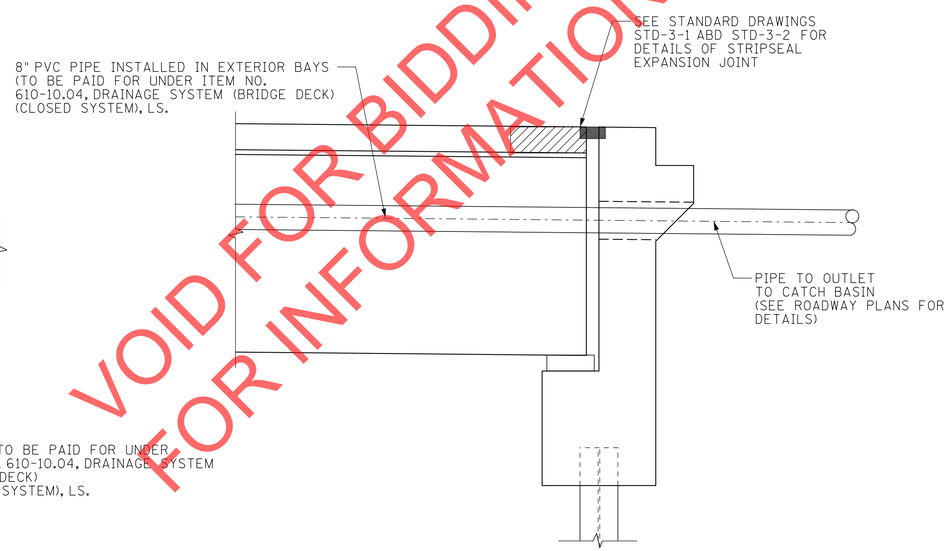

SECTION "B"-"B"

NOTES:

1. REINFORCING STEEL IN CONFLICT WITH DRAIN SYSTEM SHALL BE ADJUSTED IN THE FIELD AS DIRECTED BY THE ENGINEER. DECK REINFORCING MAY BE CUT IN FIELD. EPOXY COATED REINFORCING STEEL IS TO BE REPAINTED ACCORDING TO ASTM D-3963.
2. CONTRACTOR SHALL LOCATE DRAIN PIPE TO AVOID CONFLICTS WITH GIRDER CROSS-FRAMES.
3. ALL PIPE MUST BE SMOOTH WALLED, 8" SCHEDULE 80 PVC PIPE TO BE USED.
4. COSTS OF ALL LABOR AND MATERIALS FOR INSTALLATION OF 8" PVC PIPE AND 12" STEEL CASING SHALL BE INCLUDED IN PRICE BID FOR ITEM NO. 610-10.04, DRAINAGE SYSTEM (BRIDGE DECK) (CLOSED SYSTEM), LS.
5. COSTS OF ALL LABOR AND MATERIALS FOR INSTALLATIN OF FOURTEEN (14) 54" ACO GALVANIZED SCUPPERS AS SHOWN ON SHEET B1 SHALL BE INCLUDED IN PRICE BID FOR ITEM NO. 610-10.45, DECK DRAINS (ACO 54" GALVANIZED SCUPPER), EACH.

COORDINATES ARE NAD 83(1983), ARE DATUM ADJUSTED BY THE FACTOR OF 1.000082257 AND TIED TO THE TGRN. ALL ELEVATIONS ARE REFERENCED TO THE NAVD 1988 WITH GEOID 2003.

SEALED BY

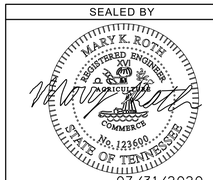

07/31/2020

HISTORIC FRANKLIN TENNESSEE

CITY OF FRANKLIN
ENGINEERING DEPARTMENT

CLOSED DRAINAGE SYSTEM DETAILS

7/30/2020 4:12:07 PM
Y:\Nashville\16019000S\16019033.00\Eng_Docs\Structures\DGN\Final Plans\SE Park_Closed Drainage System.dgn

TYPE	YEAR	PROJECT NO.	SHEET NO.
CONST.	2020	COF# 2019-0098	B26

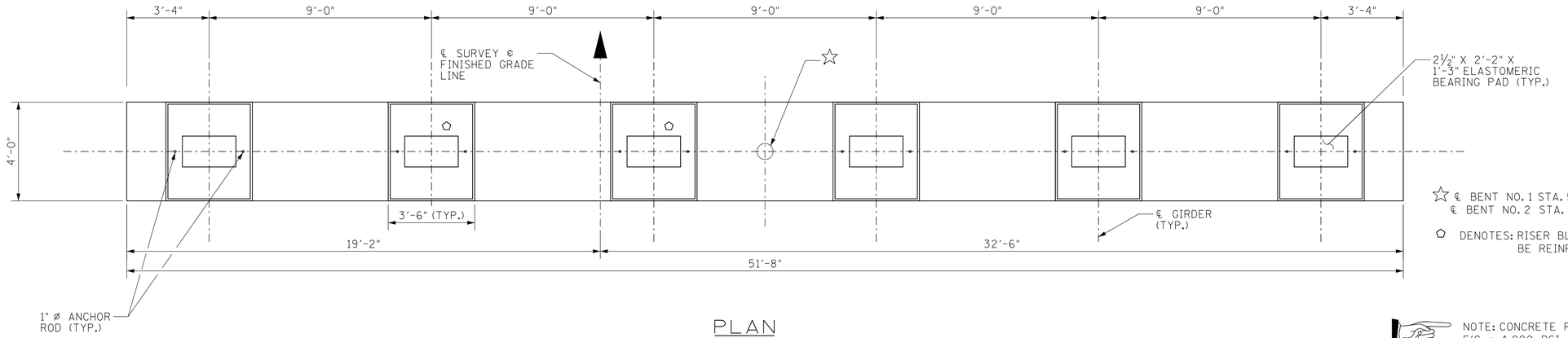

PLAN

☆ ℄ BENT NO. 1 STA. 51+06.00
℄ BENT NO. 2 STA. 53+06.00

⬠ DENOTES: RISER BLOCK TO BE REINFORCED

NOTE: CONCRETE FOR BENTS TO BE F'C = 4,000 PSI

ELEVATIONS

	BENT NO. 1	BENT NO. 2
A	648.99	649.15
B	649.12	649.28
C	649.19	649.35
D	649.06	649.22
E	648.92	649.08
F	648.79	648.95
G	648.62	648.78
H	645.62	645.78
I	642.62	642.78
J	641.62	641.78
K	644.62	644.78

⊠ DENOTES: DBL. BARS H670 4 EQ. SPA. = 3'-4"

◐ DENOTES: DBL. BARS H670 @ 3" C.C. = 2'-9"

▲ DENOTES: BARS H672 S/W BARS H670 @ 6" C.C. = 3'-6"

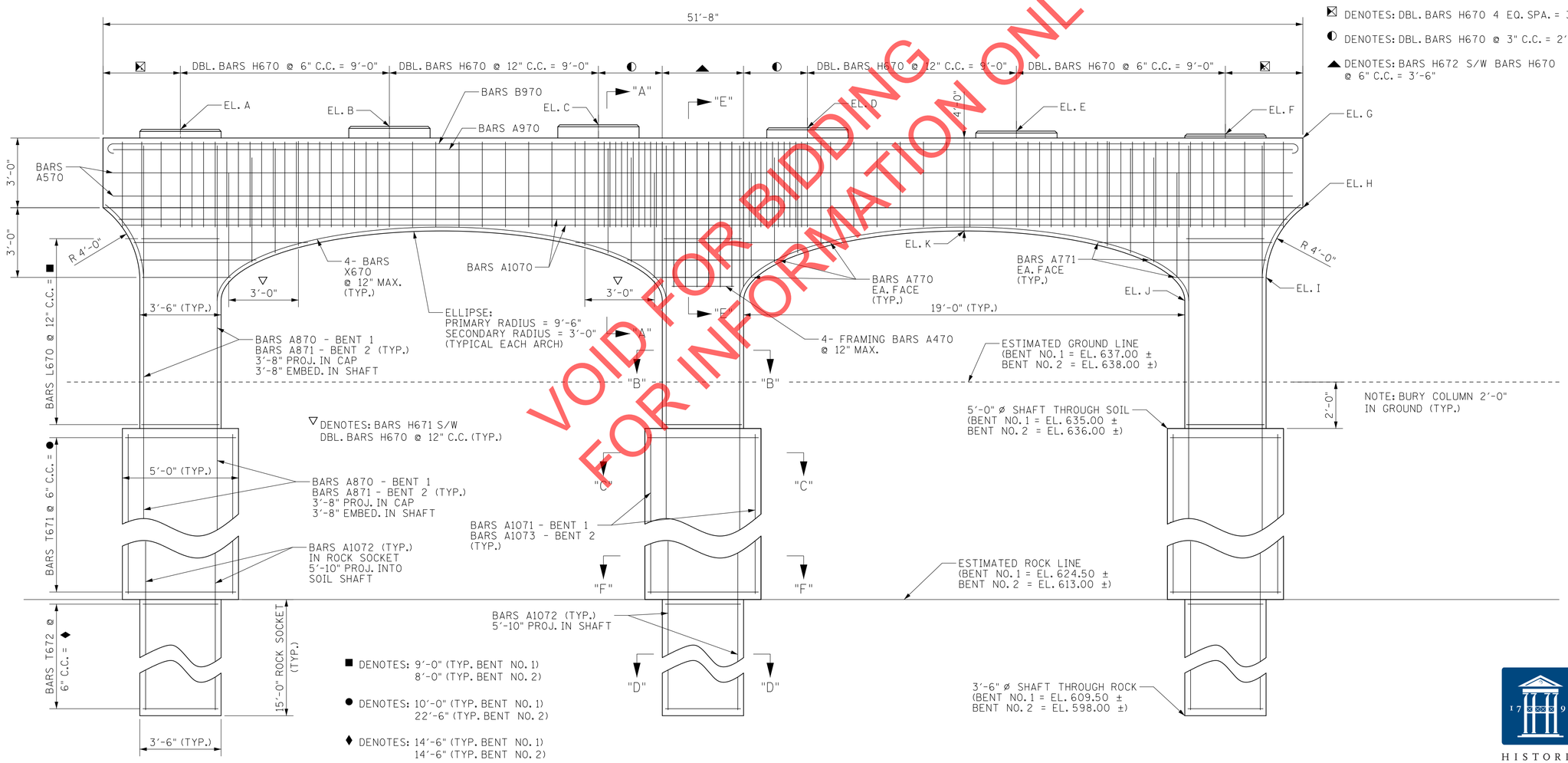

■ DENOTES: 9'-0" (TYP. BENT NO. 1)
8'-0" (TYP. BENT NO. 2)

● DENOTES: 10'-0" (TYP. BENT NO. 1)
22'-6" (TYP. BENT NO. 2)

◆ DENOTES: 14'-6" (TYP. BENT NO. 1)
14'-6" (TYP. BENT NO. 2)

ELEVATION
(LOOKING FORWARD ON SURVEY)

VOID FOR BIDDING
FOR INFORMATION ONLY

COORDINATES ARE NAD 83(1983), ARE DATUM ADJUSTED BY THE FACTOR OF 1.000082257 AND TIED TO THE TGRN. ALL ELEVATIONS ARE REFERENCED TO THE NAVD 1988 WITH GEOID 2003.

SEALED BY

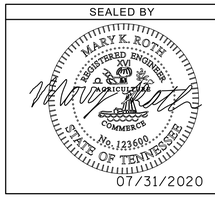

HISTORIC FRANKLIN TENNESSEE

CITY OF FRANKLIN
ENGINEERING DEPARTMENT

BENT NO. 1 & NO. 2

7/30/2020 4:12:08 PM
Y:\Nashville\16019000S\16019033.00\Eng_Docs\Structures\DGN\Final Plans\SE Park_Pier.dgn

TYPE	YEAR	PROJECT NO.	SHEET NO.
CONST.	2020	COF# 2019-0098	B27

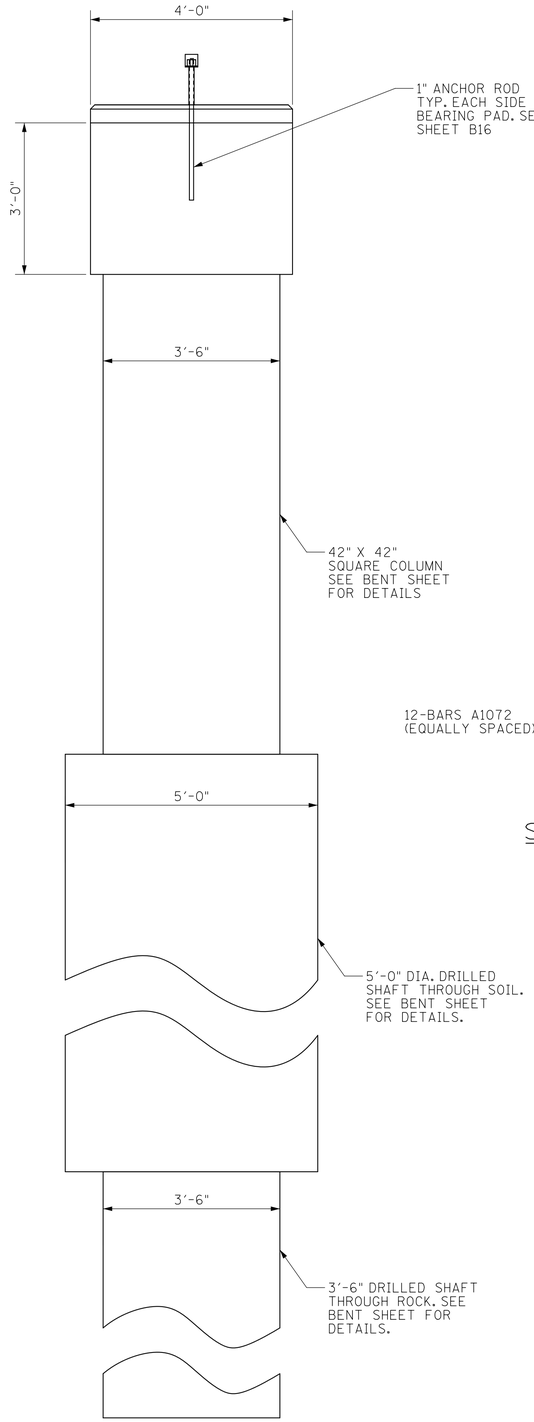

END ELEVATION

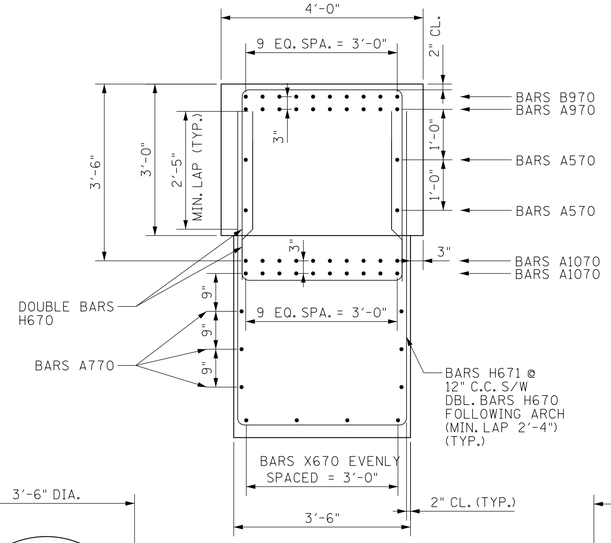

SECTION "A"-"A"

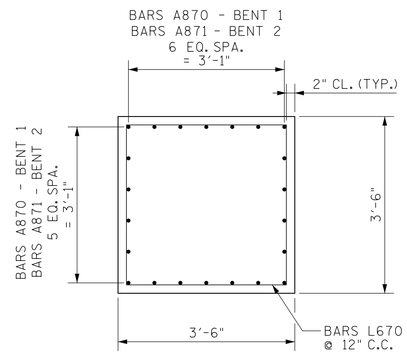

SECTION "B"-"B"

(TYPICAL AT EACH COLUMN)

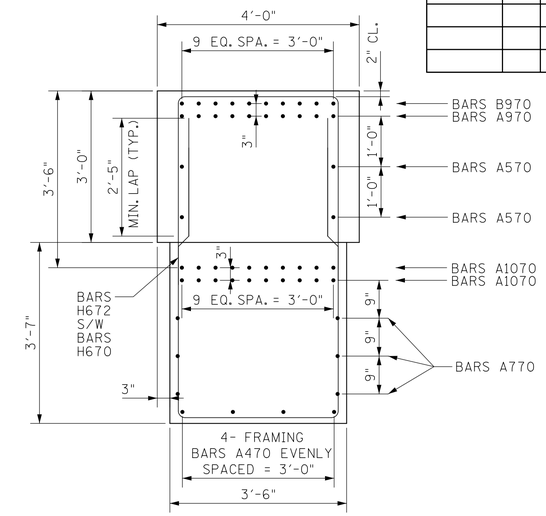

SECTION "E"-"E"

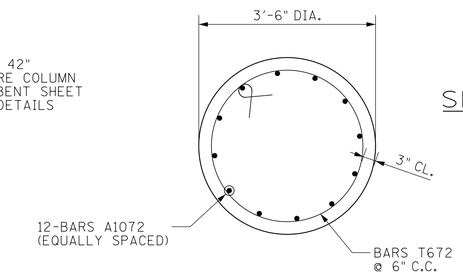

SECTION "D"-"D"

(TYPICAL AT EACH ROCK SHAFT)

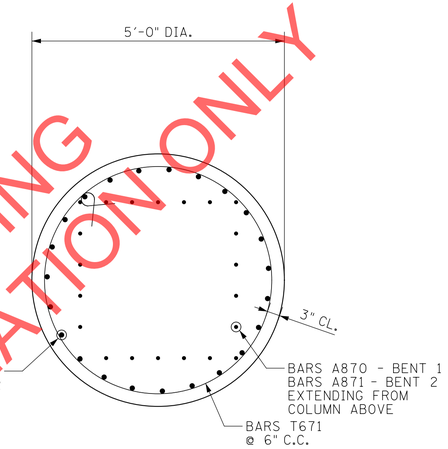

SECTION "C"-"C"

(TYPICAL AT EACH SOIL SHAFT)

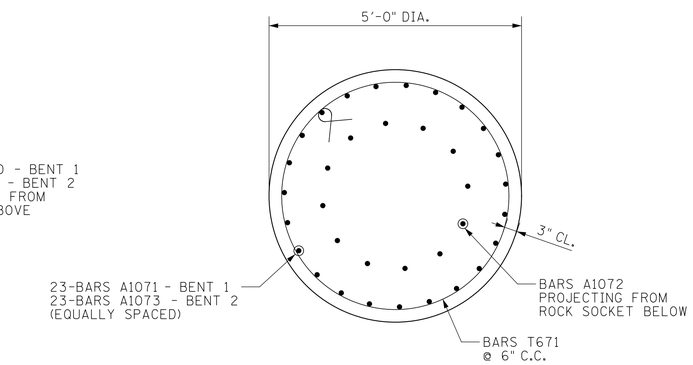

SECTION "F"-"F"

(TYPICAL AT EACH SOIL SHAFT)

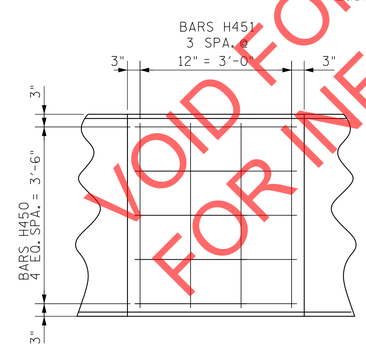

PLAN

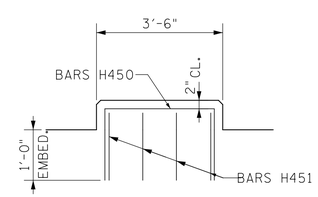

ELEVATION

REINFORCED RISER BLOCK DETAIL

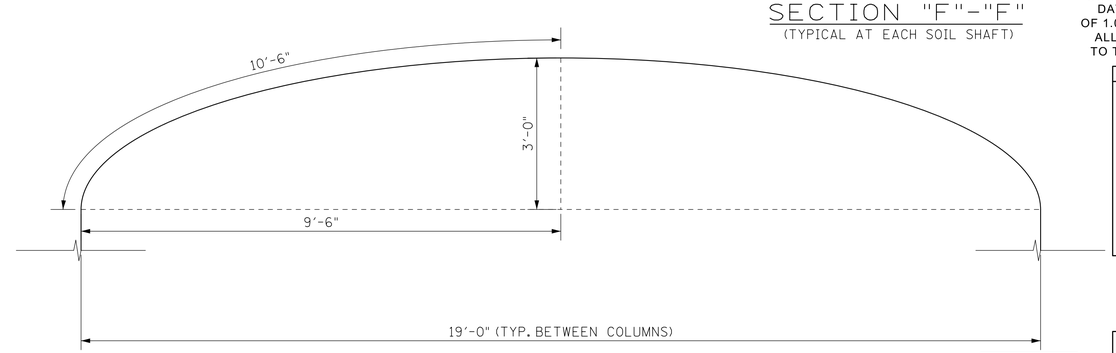

ARCH DETAIL (HALF ELLIPSE)

COORDINATES ARE NAD 83(1983), ARE DATUM ADJUSTED BY THE FACTOR OF 1.000082257 AND TIED TO THE TGRN. ALL ELEVATIONS ARE REFERENCED TO THE NAVD 1988 WITH GEOID 2003.

SEALED BY

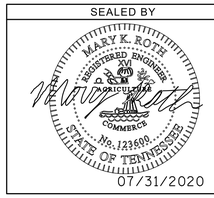

VOID FOR BIDDING
FOR INFORMATION ONLY

HISTORIC FRANKLIN TENNESSEE

CITY OF FRANKLIN
ENGINEERING DEPARTMENT

BENT NO. 1 & NO. 2 DETAILS

7/30/2020 4:12:10 PM
Y:\Nashville\16019000S\16019033.00\Eng_Docs\Structures\DGN\Final Plans\SE Park_Pier Details.dgn

TYPE	YEAR	PROJECT NO.	SHEET NO.
CONST.	2020	COF# 2019-0098	B28

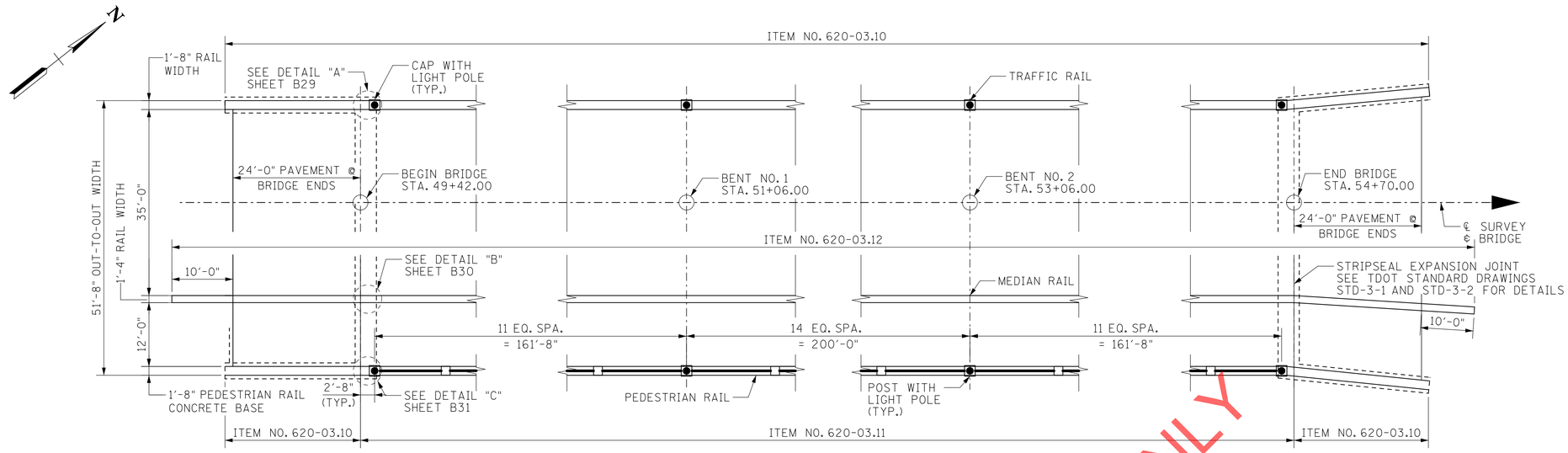

NOTE: RAIL ON WINGWALLS TO BE PAID UNDER ITEM NO. 620-03.10

□ DENOTES: CONCRETE POST

● DENOTES: CONCRETE POST W/ LIGHT POLE

CONCRETE POST LAYOUT

(NOT TO SCALE)
(DIMENSIONS TAKEN FROM CENTER POINTS OF POSTS)

VOID FOR BIDDING
FOR INFORMATION ONLY

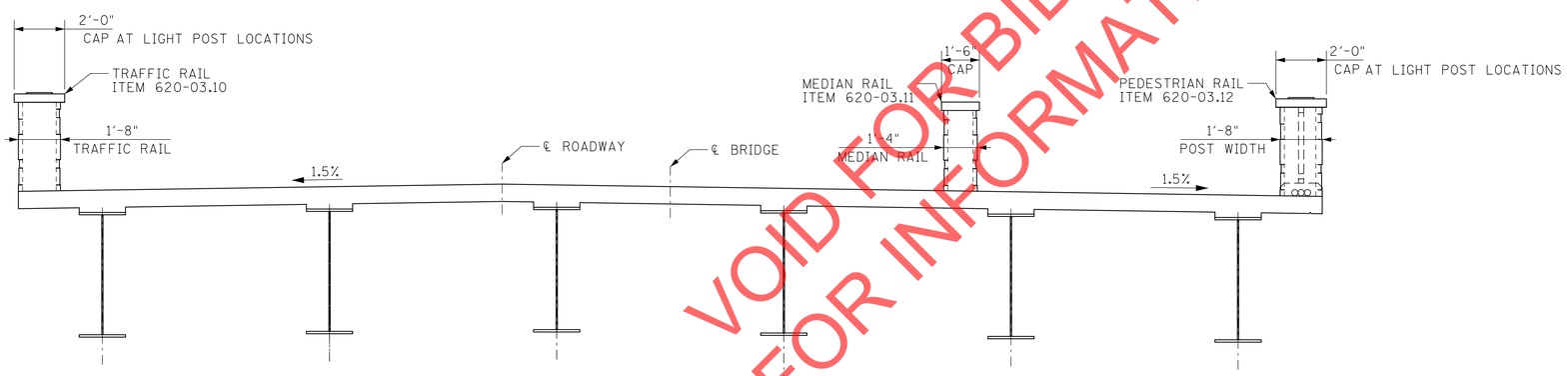

TYPICAL RAIL SECTION

(LOOKING FORWARD ON SURVEY)
SHOWING ONLY PARAPET

NOTES:

SEE SHEET B29 THRU B31 FOR DETAILS OF PARAPET.

A 4'-0" SAMPLE SECTION OF PARAPET AND A SAMPLE CONCRETE POST SHALL BE BUILT FOR APPROVAL BY THE ENGINEER.

COST OF CONDUITS AND PULL BOXES TO BE INCLUDED IN THE COST OF THE STRUCTURAL LIGHTING, ITEM NO. 714-01.01.

EACH FACE OF CONCRETE BARRIER RAIL AND CONCRETE POSTS TO BE FORMED WITH AN APPROVED FORM LINER SIMILAR TO CUSTOM ROCK PATTERN #1208, DRYSTACK.

STRUCTURAL FENCING RAIL TO BE POWDER COATED BLACK.

STRUCTURAL FENCING RAIL SHALL CONFORM TO ASTM A500 GRADE B.

SEE S-GRC-6 FOR GUARDRAIL INSERT ASSEMBLY LOCATION. ONLY PLACE INSERTS AT LOCATIONS WITH ADJACENT GUARDRAIL.

LIGHT POLES TO CONSIST OF HOLOPHANE SQUARE STRAIGHT ALUMINUM POLES SSA3066J AND MONGOOSE LED (MGLED) FIXTURES TO BE 3,000K CCT.

COORDINATES ARE NAD 83(1983), ARE DATUM ADJUSTED BY THE FACTOR OF 1.000082257 AND TIED TO THE TGRN. ALL ELEVATIONS ARE REFERENCED TO THE NAVD 1988 WITH GEOID 2003.

SEALED BY

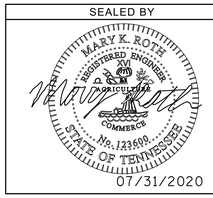

ITEM NO. 620-03.10 (TRAFFIC RAIL)	
PARAPET QUANTITIES (INCLUDES PORTION OF RAIL ON WINGWALLS) (PER FOOT)	
CLASS "A" CONCRETE (C.Y./FT.)	EPOXY COATED REINFORCING STEEL (LB./FT.)
0.25	25

ITEM NO. 620-03.11 (MEDIAN RAIL)	
PARAPET QUANTITIES (PER FOOT)	
CLASS "A" CONCRETE (C.Y./FT.)	EPOXY COATED REINFORCING STEEL (LB./FT.)
0.18	24

ITEM NO. 620-03.12 (PEDESTRIAN RAIL)			
PARAPET QUANTITIES (EXCLUDES PORTION OF RAIL ON WINGWALLS)			
CLASS "A" CONCRETE PER POST (C.Y.)	CLASS "A" CONCRETE (6" BASE) (C.Y./FT.)	EPOXY COATED REINFORCING STEEL PER POST (LB.)	STRUCTURAL METAL FENCING TOTAL LENGTH (FT.)
0.43	0.03	58	518

HISTORIC FRANKLIN TENNESSEE

CITY OF FRANKLIN
ENGINEERING DEPARTMENT

BRIDGE RAIL DETAILS

7/30/2020 4:12:11 PM
Y:\Nashville\16019000S\16019033.00\Eng_Docs\Structures\DGN\Final Plans\SE Park_Rail Typ Section.dgn

TYPE	YEAR	PROJECT NO.	SHEET NO.
CONST.	2020	COF# 2019-0098	B29

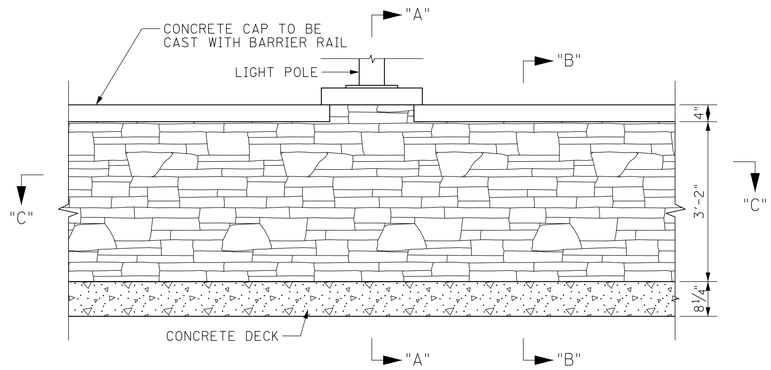

ELEVATION - TRAFFIC RAIL

ITEM NO. 620-03.10

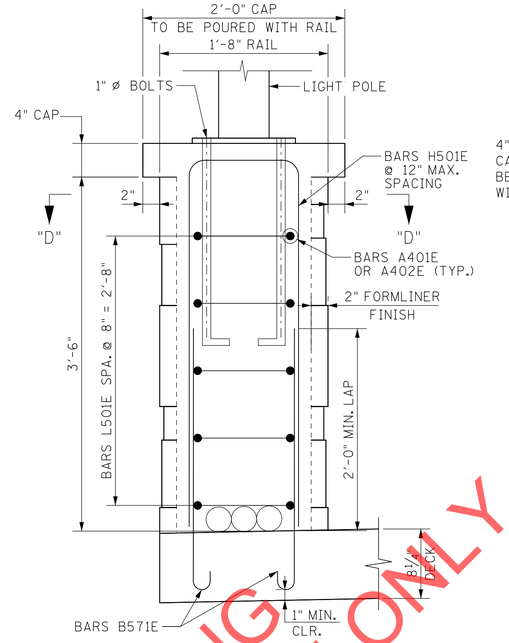

SECTION "A"-"A"

(TYPICAL AT LIGHT POLE LOCATIONS)

NOTE: CAP TO BE POURED CONCURRENTLY WITH RAIL AND HAVE A SMOOTH FINISH

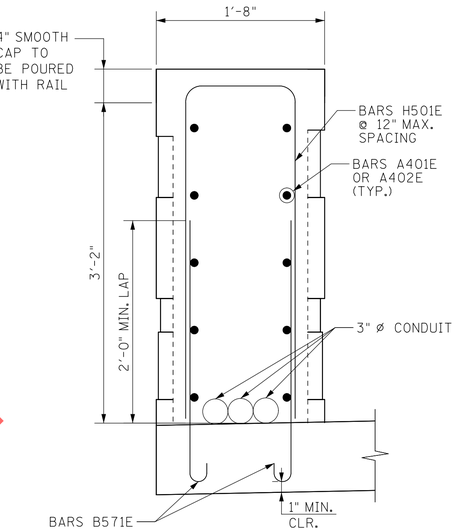

SECTION "B"-"B"

(TYPICAL BETWEEN LIGHT POLES)

NOTE: CAP TO BE POURED CONCURRENTLY WITH RAIL AND HAVE A SMOOTH FINISH

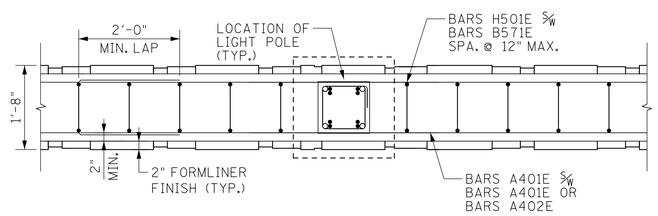

SECTION "C"-"C" - TRAFFIC RAIL

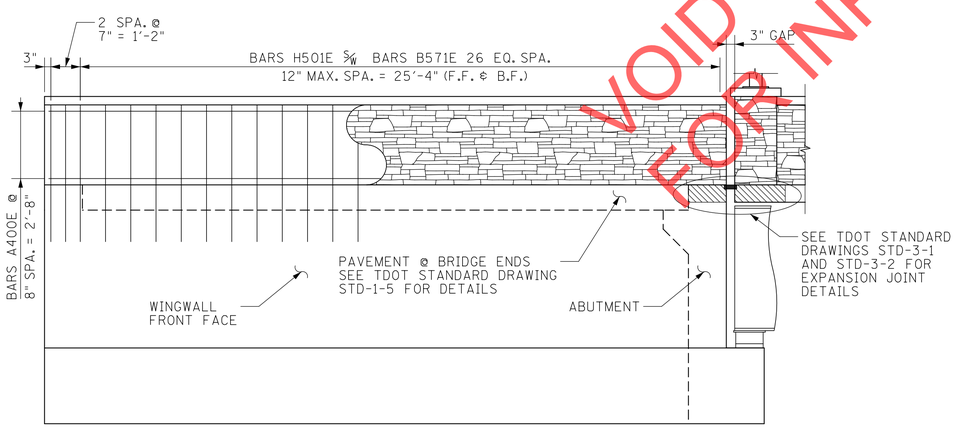

ELEVATION AT BRIDGE ENDS

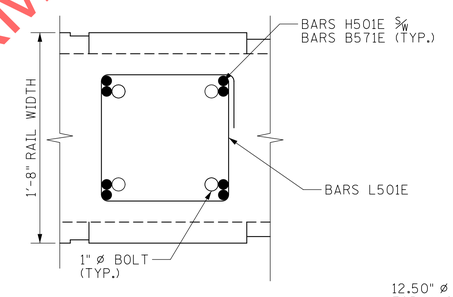

SECTION "D"-"D"

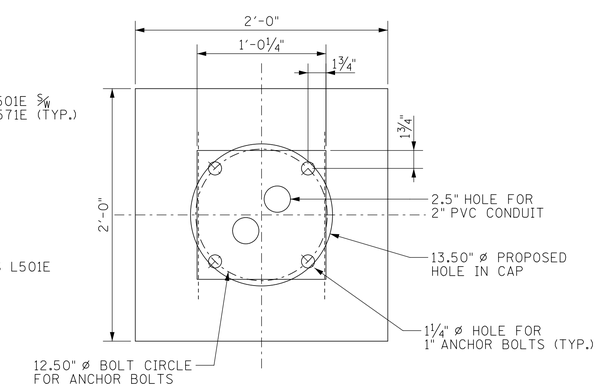

PLAN AT LIGHT POLE BASE

(TYPICAL AT ALL LIGHT POLE LOCATIONS)

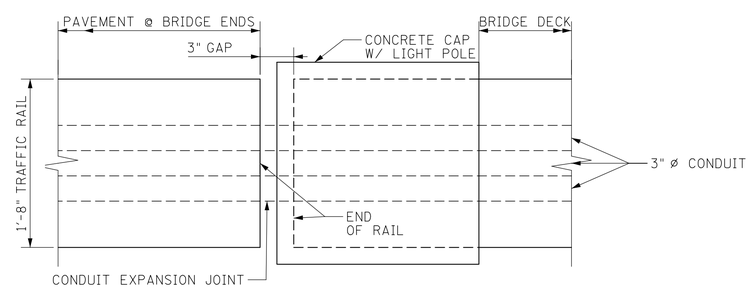

DETAIL "A"

(PLAN VIEW)

COORDINATES ARE NAD 83(1983), ARE DATUM ADJUSTED BY THE FACTOR OF 1.000082257 AND TIED TO THE TGRN. ALL ELEVATIONS ARE REFERENCED TO THE NAVD 1988 WITH GEOID 2003.

SEALED BY

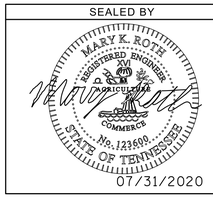

HISTORIC FRANKLIN TENNESSEE

CITY OF FRANKLIN
ENGINEERING DEPARTMENT

TRAFFIC RAIL DETAILS

VOID FOR BIDDING
FOR INFORMATION ONLY

7/30/2020 4:12:13 PM
Y:\Nashville\16019000S\16019033.00\Eng_Docs\Structures\DGN\Final Plans\SE Park_Rail - Traffic.dgn

TYPE	YEAR	PROJECT NO.	SHEET NO.
CONST.	2020	COF# 2019-0098	B30

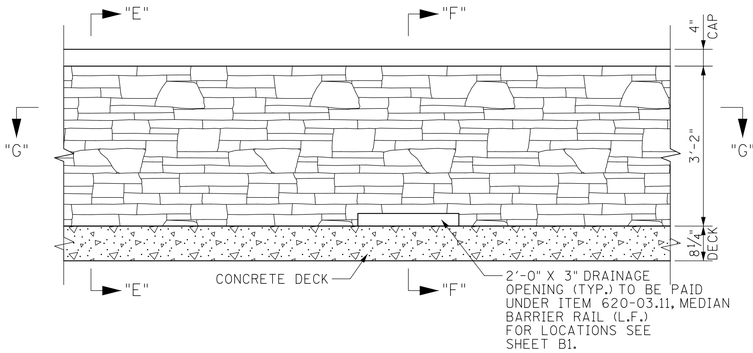

ELEVATION - MEDIAN RAIL

ITEM NO. 620-03.11

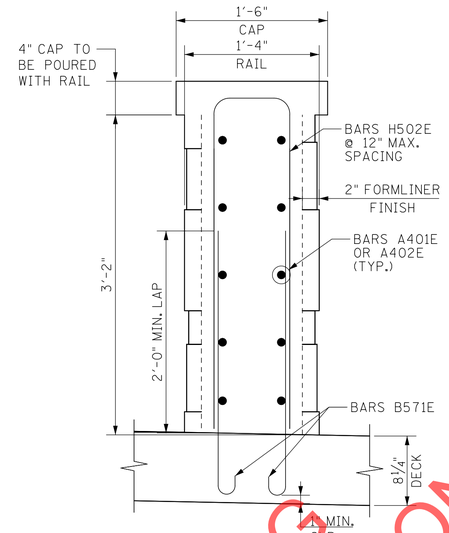

SECTION "E"-"E"

(TYPICAL MEDIAN RAIL SECTION)

NOTE: CAP TO BE POURED CONCURRENTLY WITH RAIL AND HAVE A SMOOTH FINISH

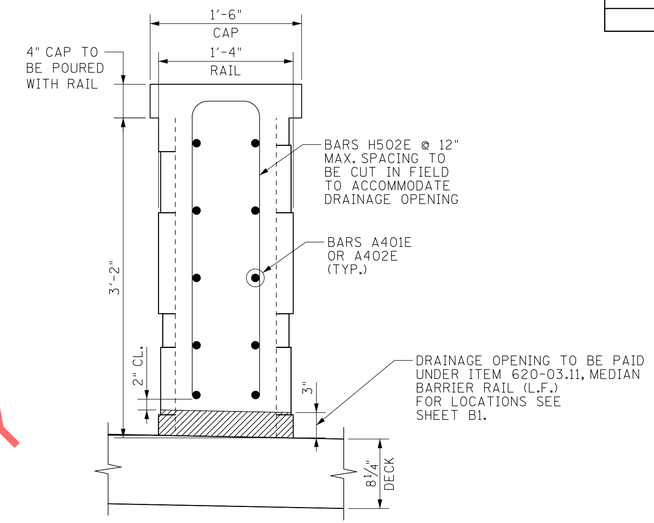

SECTION "F"-"F"

(TYPICAL AT OPENING)

NOTE: CAP TO BE POURED CONCURRENTLY WITH RAIL AND HAVE A SMOOTH FINISH

NOTE: BARS MAY BE ADJUSTED OR CUT IN FIELD TO ACCOMMODATE DRAINAGE OPENING

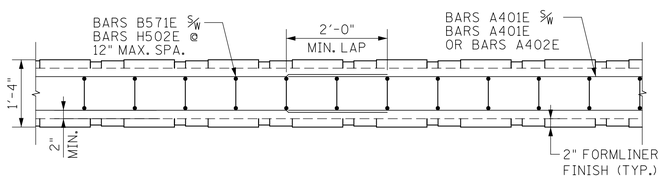

SECTION "G"-"G" - MEDIAN RAIL

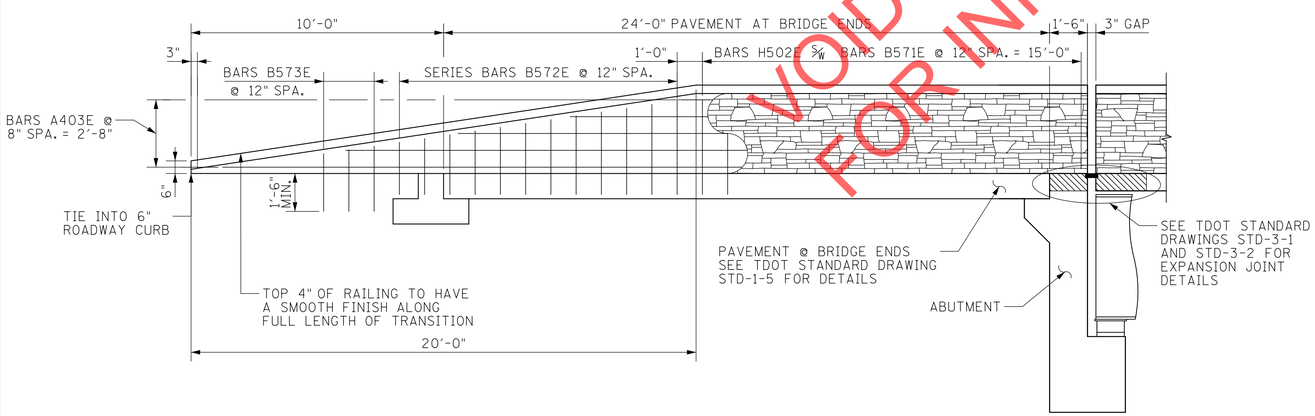

ELEVATION AT BRIDGE ENDS

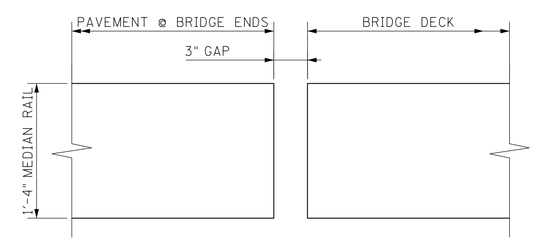

DETAIL "B"

(PLAN VIEW)

VOID FOR BIDDING
FOR INFORMATION ONLY

COORDINATES ARE NAD 83(1983), ARE DATUM ADJUSTED BY THE FACTOR OF 1.000082257 AND TIED TO THE TGRN. ALL ELEVATIONS ARE REFERENCED TO THE NAVD 1988 WITH GEOID 2003.

SEALED BY

MARY K. ROTH REGISTERED ENGINEER AGRICULTURE COMMERCE No. 123609 STATE OF TENNESSEE

07/31/2020

HISTORIC FRANKLIN TENNESSEE

CITY OF FRANKLIN
ENGINEERING DEPARTMENT

MEDIAN RAIL DETAILS

7/30/2020 4:12:14 PM
Y:\Nashville\16019000S\16019033.00\Eng_Docs\Structures\DGN\Final Plans\SE Park_Rail - Median.dgn

TYPE	YEAR	PROJECT NO.	SHEET NO.
CONST.	2020	COF# 2019-0098	B31

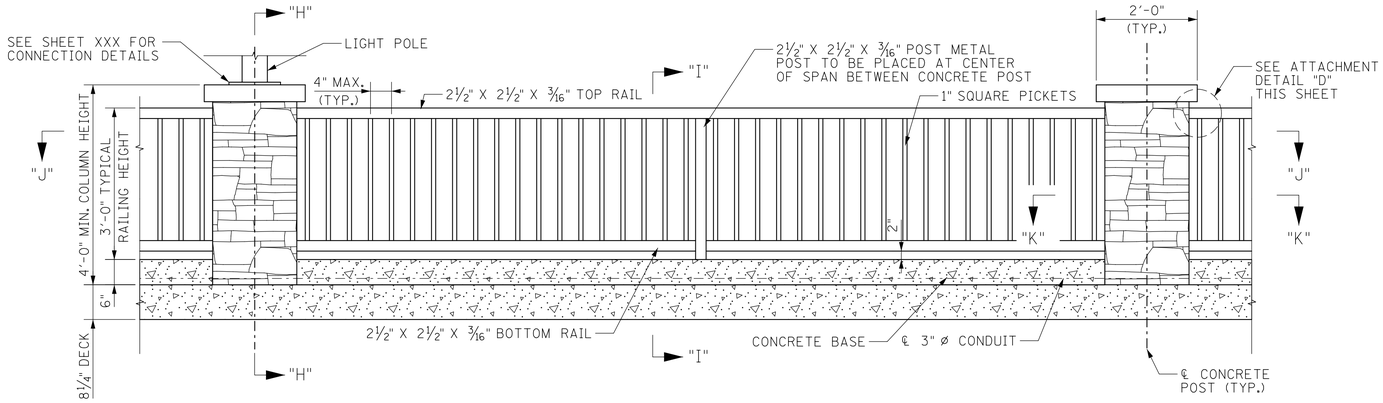

ELEVATION - PEDESTRIAN RAIL

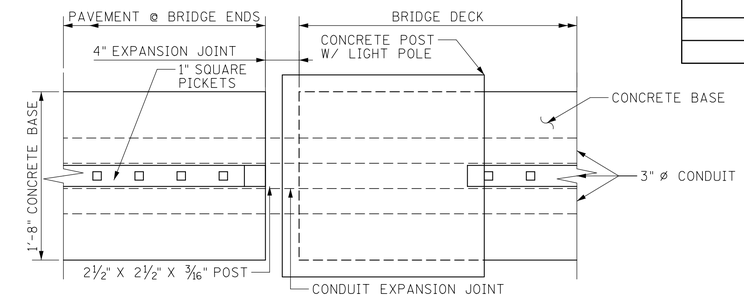

DETAIL "C"
(PLAN VIEW)

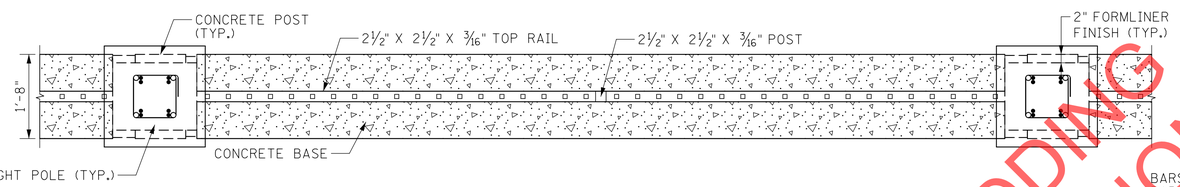

SECTION "J"-"J" - PEDESTRIAN RAIL

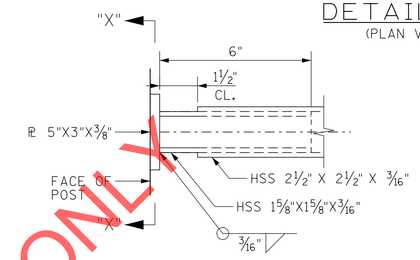

DETAIL "D"
NO SCALE

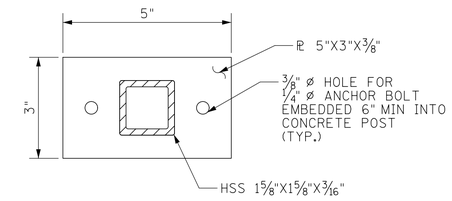

SECTION "X"-"X"
NO SCALE

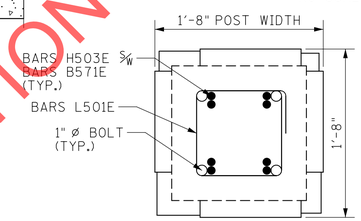

SECTION "K"-"K"
TYPICAL AT ALL POST LOCATIONS

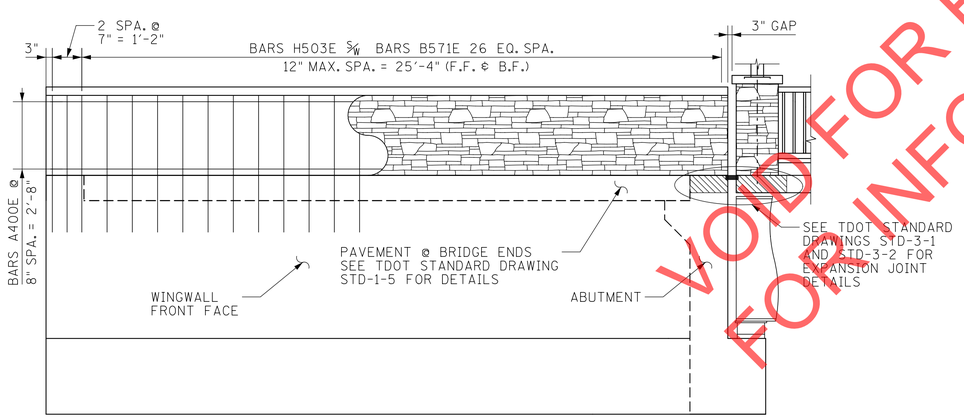

ELEVATION AT BRIDGE ENDS

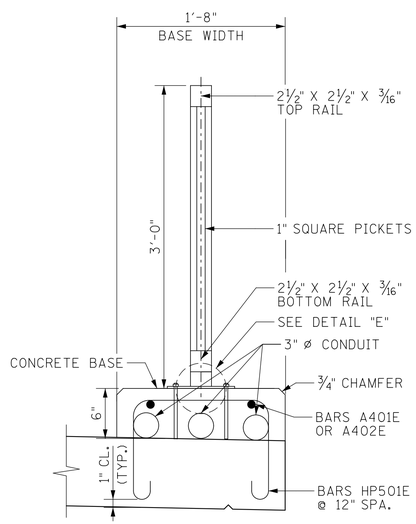

SECTION "I"-"I"

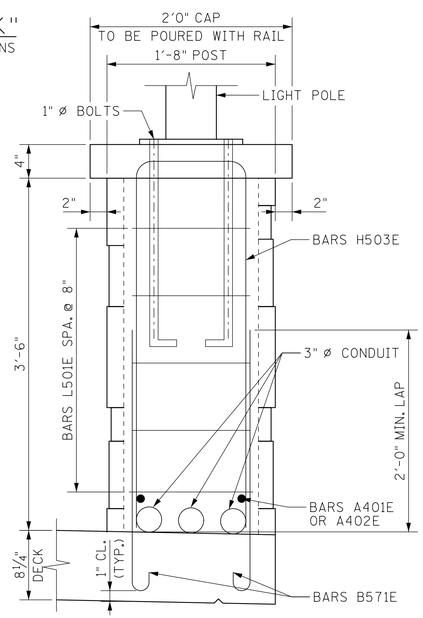

SECTION "H"-"H"

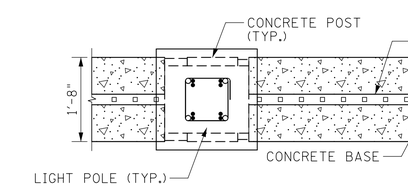

ANCHOR PLATE DETAIL

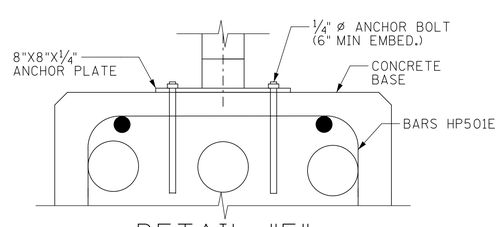

DETAIL "E"

NOTE: CONTRACTOR SHALL AVOID CONFLICTS WITH CONDUITS AND VERTICAL STEEL POST ANCHORS OF THE PEDESTRIAN RAIL.

VOID FOR BIDDING
FOR INFORMATION ONLY

COORDINATES ARE NAD 83(1983), ARE DATUM ADJUSTED BY THE FACTOR OF 1.000082257 AND TIED TO THE TGRN. ALL ELEVATIONS ARE REFERENCED TO THE NAVD 1988 WITH GEOID 2003.

SEALED BY

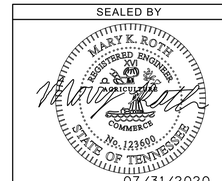

HISTORIC FRANKLIN TENNESSEE

CITY OF FRANKLIN
ENGINEERING DEPARTMENT

PEDESTRIAN RAIL DETAILS

7/30/2020 4:12:16 PM
Y:\Nashville\16019000S\16019033.00\Eng_Docs\Structures\DGN\Final Plans\SE Park_Rail - Pedestrian.dgn

TYPE	YEAR	PROJECT NO.	SHEET NO.
CONST.	2020	COF# 2019-0098	B32

APPROVED UNDERPASS LED LUMINAIRE

MANUFACTURER	MODEL	NOTES
RAB	W34-30L-830	OR APPROVED EQUIVALENT

NOTE: COST OF ALL MATERIALS AND LABOR NECESSARY FOR INSTALLATION OF UNDERPASS LUMINAIRES AND COMPONENTS SHALL BE INCLUDED IN BID PRICE FOR ITEM NO. 714-01.01, STRUCTURAL LIGHTING (LS).

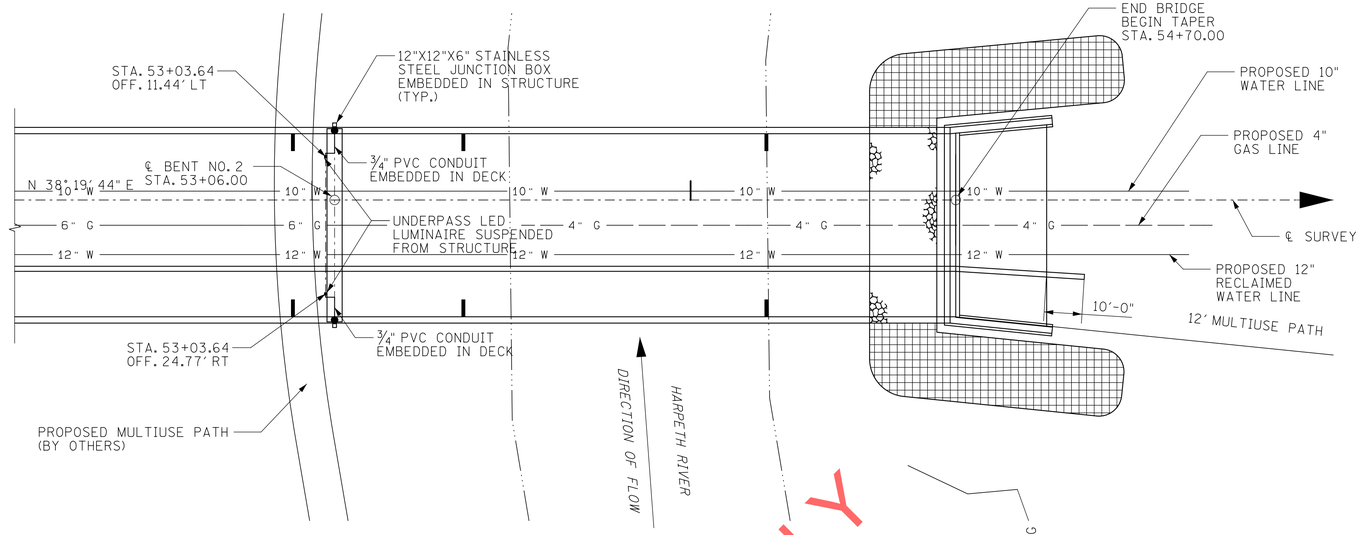

PLAN

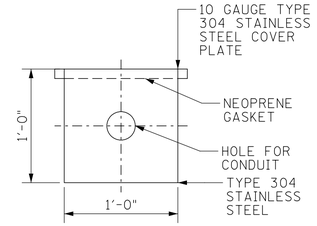

JUNCTION BOX DETAIL

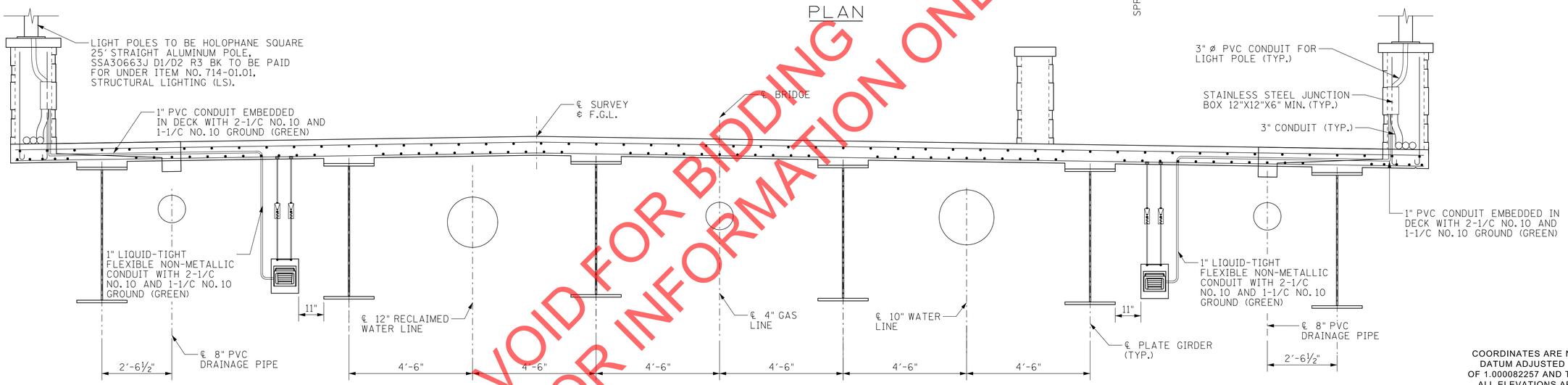

CROSS-SECTION AT UNDERPASS LUMINAIRE LOCATION

(LOOKING FORWARD ON SURVEY)

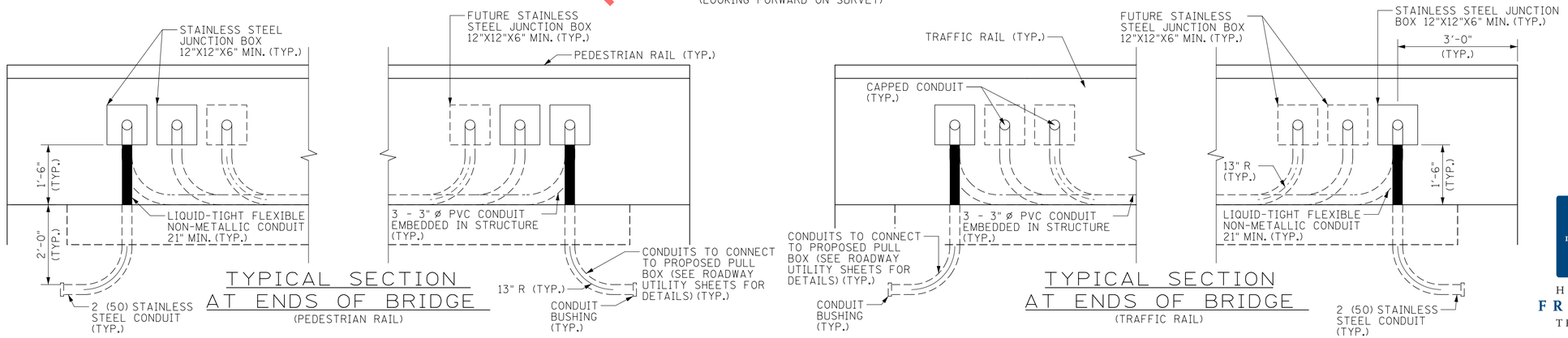

TYPICAL SECTION AT ENDS OF BRIDGE

(PEDESTRIAN RAIL)

TYPICAL SECTION AT ENDS OF BRIDGE

(TRAFFIC RAIL)

VOID FOR BIDDING
FOR INFORMATION ONLY

COORDINATES ARE NAD 83(1983), ARE DATUM ADJUSTED BY THE FACTOR OF 1.000082257 AND TIED TO THE TGRN. ALL ELEVATIONS ARE REFERENCED TO THE NAVD 1988 WITH GEOID 2003.

SEALED BY

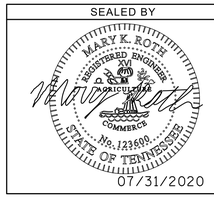

HISTORIC FRANKLIN TENNESSEE

CITY OF FRANKLIN
ENGINEERING DEPARTMENT

UNDERPASS BRIDGE LIGHTING

7/30/2020 4:12:17 PM
Y:\Nashville\16019000S\16019033.00\Eng_Docs\Structures\DGN\Final Plans\SE Park_Underpass Lighting Layout.dgn

TYPE	YEAR	PROJECT NO.	SHEET NO.
CONST.	2020	COF# 2019-0098	B33

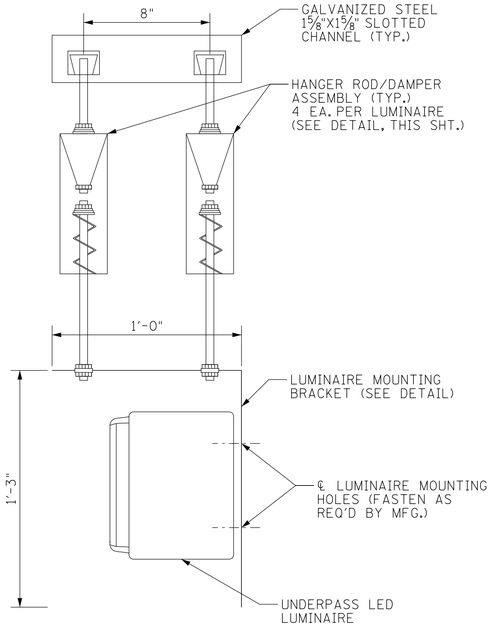

LUMINAIRE SUPPORT

(SIDE VIEW)

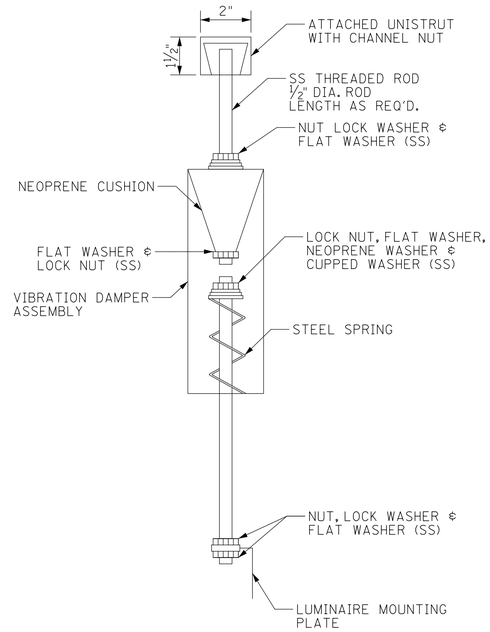

LUMINAIRE HANGER ASSEMBLY

NOT TO SCALE

THE COST OF LUMINAIRE HANGER ASSEMBLY SHALL BE INCLUDED IN THE PAY ITEM FOR UNDERPASS LUMINAIRE.

OTHER VIBRATION DAMPER ASSEMBLIES MAY BE USED IF APPROVED BY THE ENGINEER.

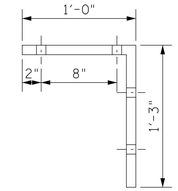

SIDE VIEW

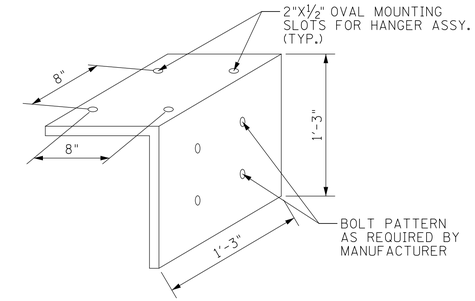

PERSPECTIVE VIEW

LUMINAIRE MOUNTING BRACKET (FURNISHED AND INSTALLED BY LUMINAIRE MANUFACTURER)

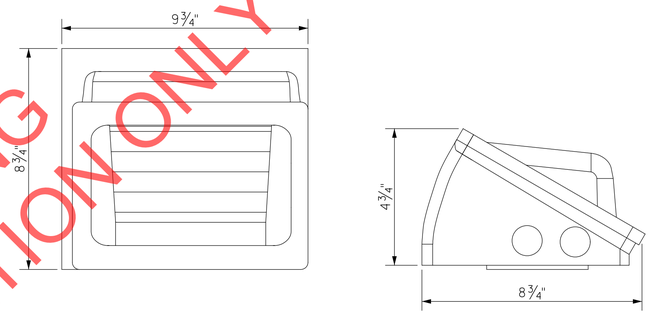

LUMINAIRE DETAILS

VOID FOR BIDDING
FOR INFORMATION ONLY

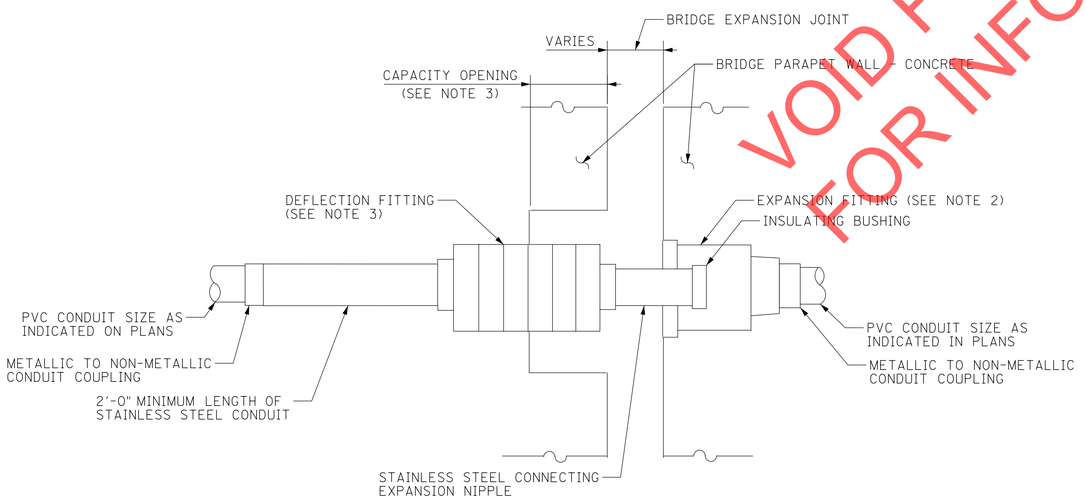

CONDUIT EXPANSION/ DEFLECTION COUPLING DETAIL

NOTES:

1. THE CONTRACTOR SHALL INSTALL A CONDUIT EXPANSION/DEFLECTION COUPLING AT THE JOINTS IN THE CONCRETE PARAPET ON THE BRIDGE CAPABLE OF ACCEPTING THE LONGITUDINAL MOVEMENT. ALL METALLIC PARTS OF THE COUPLING SHALL BE MADE OF STAINLESS STEEL OR AS APPROVED BY THE ENGINEER. ANY NON-STAINLESS METAL SHALL BE HOT DIP GALVANIZED AND COATED TO PREVENT REACTION WITH THE CONCRETE. THE COST OF THE COUPLING SHALL BE PART OF AND INCIDENTAL TO THE CONDUIT SYSTEM.
2. THE BARREL IN THE EXPANSION FITTING SHALL BE FULLY EMBEDDED IN THE CONCRETE ON ONE SIDE OF THE EXPANSION JOINT. ONE HALF THE LENGTH OF THE DEFLECTION FITTING SHALL BE EMBEDDED IN THE CONCRETE ON THE OTHER SIDE OF THE COUPLING.
3. A CAVITY OPENING 3" LARGER IN DIAMETER THAN THE DEFLECTION FITTING SHALL BE PROVIDED IN THE CONCRETE TO ENSURE PROPER PERFORMANCE OF THE COUPLING.
4. CAREFUL ATTENTION TO JOINT MOVEMENT OVER A RANGE OF TEMPERATURES SHALL BE COORDINATED WITH THE SELECTION AND INSTALLATION OF THE COUPLING TO ENSURE THE RANGE OF MOVEMENT OF THE COUPLING IS NOT EXCEEDED AT TEMPERATURE EXTREMES.
5. ALL MANUFACTURER'S INSTALLATION INSTRUCTIONS SHALL BE CAREFULLY FOLLOWED TO ENSURE OPTIMUM PERFORMANCE OF THE EXPANSION/DEFLECTION COUPLING.
6. THE CONTRACTOR SHALL INSTALL COUPLINGS AT ALL BRIDGE EXPANSION JOINTS AND SHALL BE RESPONSIBLE TO DETERMINE THE PROPER NUMBER OF COUPLINGS REQUIRED.
7. WITH THE APPROVAL OF THE ENGINEER, THE CONTRACTOR MAY SUBSTITUTE TWO (2) STAINLESS STEEL JUNCTION BOXES ATTACHED TO THE BACK OF THE WALL AND CONNECTED BY A HIGH GRADE OF FLEXIBLE NON-METALLIC CONDUIT FOR ALL EXPANSION JOINTS. THIS SUBSTITUTION SHALL BE MADE AT NO COST TO THE TOLLWAY.

COORDINATES ARE NAD 83(1983), ARE DATUM ADJUSTED BY THE FACTOR OF 1.000082257 AND TIED TO THE TGRN. ALL ELEVATIONS ARE REFERENCED TO THE NAVD 1988 WITH GEOID 2003.

SEALED BY

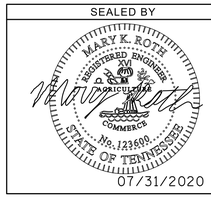

HISTORIC FRANKLIN TENNESSEE

CITY OF FRANKLIN
ENGINEERING DEPARTMENT

UNDERPASS LIGHTING DETAILS

7/30/2020 4:12:18 PM
Y:\Nashville\16019000S\16019033.00\Eng_Docs\Structures\DGN\Final Plans\SE Park_Underpass Lighting Details.dgn

TYPE	YEAR	PROJECT NO.	SHEET NO.
CONST.	2020	COF# 2019-0098	B34

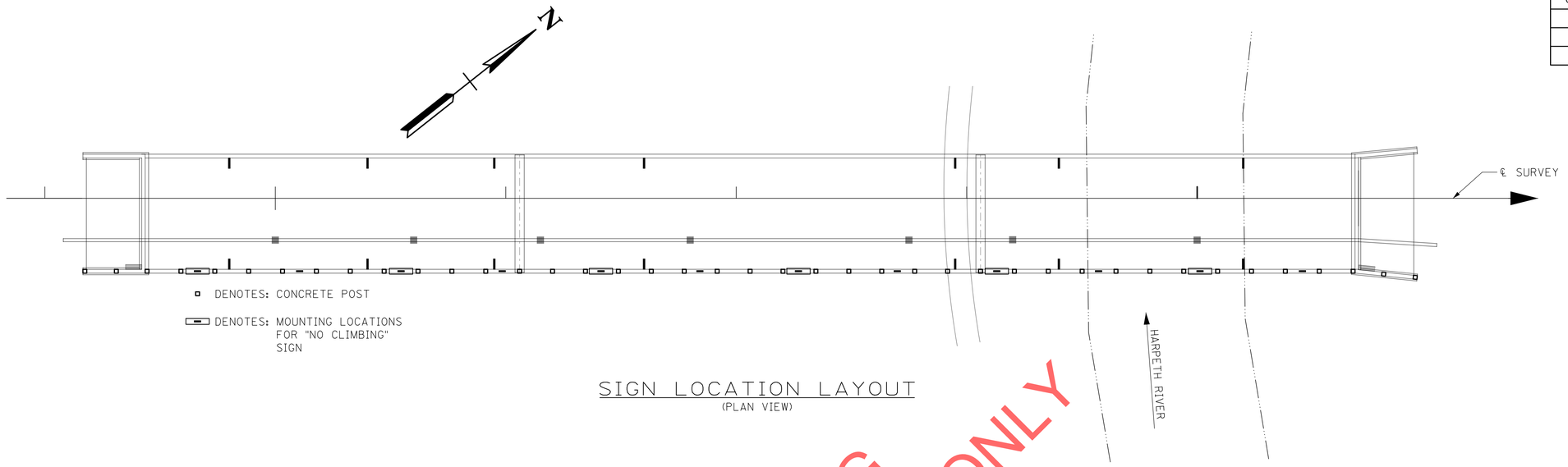

▫ DENOTES: CONCRETE POST

▭ DENOTES: MOUNTING LOCATIONS FOR "NO CLIMBING" SIGN

SIGN LOCATION LAYOUT
(PLAN VIEW)

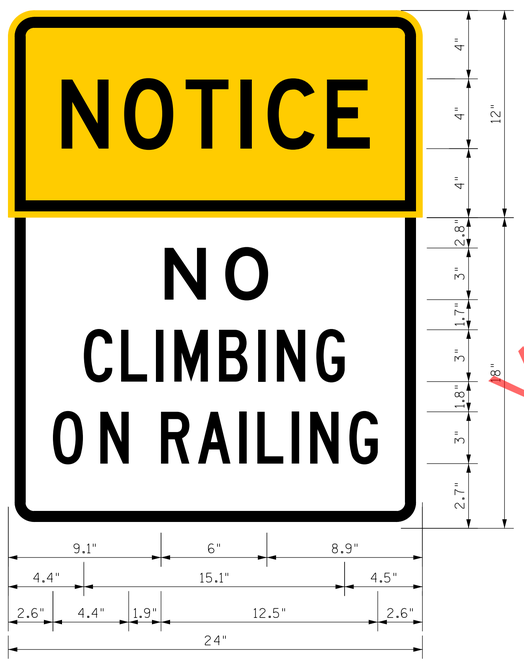

NO CLIMBING SIGN
ITEM NO. 713-16.21
(TO BE MOUNTED ON METAL FENCE RAILING)
(6 SIGNS TOTAL REQUIRED)
ALL DIMENSIONS SHOWN IN THIS DRAWING ARE IN INCHES

ITEM NO. 713-16.20 SIGNS (NO CLIMBING) EACH	ITEM NO. 713-16.22 SIGNS (SOUTHEAST PARK 93.3) EACH
6	2

RIVER MILE MARKER SIGN
ITEM NO. 713-16.22
(TO BE MOUNTED ON CONCRETE DECK AT UPSTREAM AND DOWNSTREAM SIDES OF BRIDGE CENTERED OVER HARPETH RIVER)
(2 SIGNS TOTAL REQUIRED)

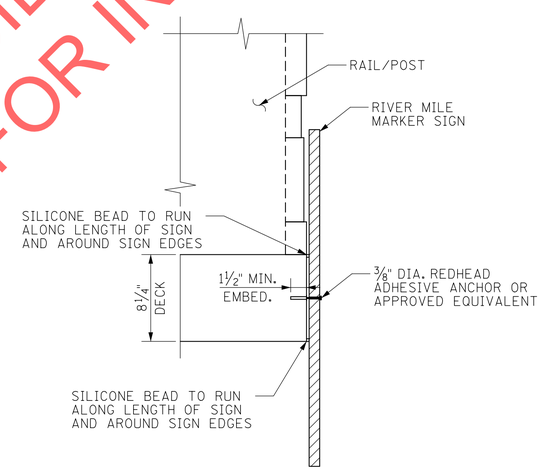

RIVER MILE MARKER SIGN MOUNTING DETAIL
(SECTION VIEW)

NOTES:

1. RIVER MILE MARKER SIGN (ITEM NO. 713-16.21) SHALL CONSIST OF LETTERS 12" IN HEIGHT WITH WHITE REFLECTIVE LETTERING ON BLUE REFLECTIVE BACKGROUND.
2. RIVER MILE MARKER SIGN (ITEM NO. 713-16.21) SHALL BE MOUNTED ON SIDE OF CONCRETE DECK BOTH UPSTREAM AND DOWNSTREAM OF BRIDGE, LOCATED CENTERED OVER HARPETH RIVER.
3. NO CLIMBING SIGN TO BE MOUNTED TO METAL FENCE RAILING USING SINGLE BOLT STRAP BRACKETS OVER TOP POST ON EACH SIDE OF CENTER POST.
4. COST OF ALL MATERIALS AND LABOR ASSOCIATED WITH INSTALLATION OF SIGNS SHALL BE PAID FOR UNDER ITEM NOS. 713-16.20.
5. RIVER MILE MARKER SIGNS (SOUTHEAST PARK 93.3) SHALL BE MANUFACTURED AND PAID FOR BY THE CITY OF FRANKLIN. COST OF LABOR AND INSTALLATION FOR RIVER MILE MARKER SIGNS TO BE PAID FOR UNDER ITEM NO. 713-16.22.

COORDINATES ARE NAD 83(1983), ARE DATUM ADJUSTED BY THE FACTOR OF 1.000082257 AND TIED TO THE TGRN. ALL ELEVATIONS ARE REFERENCED TO THE NAVD 1988 WITH GEOID 2003.

SEALED BY

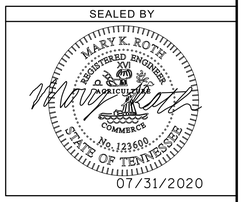

HISTORIC FRANKLIN TENNESSEE

CITY OF FRANKLIN
ENGINEERING DEPARTMENT

BRIDGE SIGN DETAILS

VOID FOR BIDDING
FOR INFORMATION ONLY

7/30/2020 4:12:20 PM
Y:\Nashville\16019000S\16019033.00\Eng_Docs\Structures\DGN\Final Plans\SE Park_No Climbing Sign.dgn

TYPE	YEAR	PROJECT NO.	SHEET NO.
CONST.	2020	COF# 2019-0098	B35

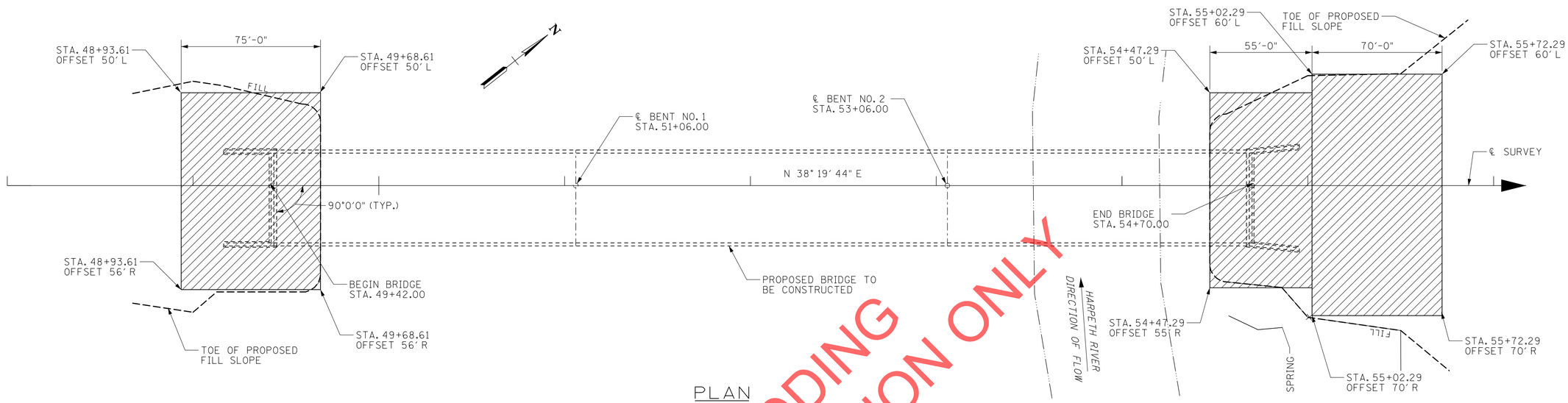

PLAN

DENOTES: LIMITS OF AREA TO BE IMPROVED USING AGGREGATE FOUNDATON SYSTEM, ITEM NO. 626-01.01

NOTE: CONTRACTOR SHALL TAKE CARE NOT TO DISTURB EXISTING SPRING AND SHALL PREVENT ANY DEBRIS OR MATERIALS FROM ENTERING EXISTING SPRING DURING ALL ACTIVITIES ASSOCIATED WITH THE INSTALLATION OF AGGREGATE FOUNDATION SYSTEM. REFER TO EPSC NOTES AND PLANS FOR ADDITIONAL DETAILS.

NOTES:

1. THE GEOTECHNICAL INVESTIGATION AT THE SITE REVEALED THAT THE SOILS AROUND THE PROPOSED ABUTMENTS AND APPROACHES WERE SUSCEPTIBLE TO LARGE SETTLEMENTS IF LEFT UNIMPROVED PRIOR TO THE INSTALLATION OF APPROACH FILLS AND ABUTMENT SLOPES. THE CONTRACTOR SHALL DEVELOP A DESIGN, FURNISH ALL MATERIALS, CONSTRUCT, AND PERFORM TESTING OF AN AGGREGATE FOUNDATION SYSTEM TO RESULT IN LESS THAN ONE (1) INCH OF FINAL SETTLEMENT FOLLOWING THE INSTALLATION OF APPROACH CURB AND GUTTER AND FINAL PAVING. THE AGGREGATE FOUNDATION SYSTEM SHALL CONSIST OF STONE COLUMNS OR RAMMED AGGREGATE PIERS INSTALLED AT A SPACING AND DEPTH TO ACHIEVE LESS THAN ONE (1) INCH OF FINAL SETTLEMENT.

2. AGGREGATE FOUNDATION SYSTEM SHALL MEET ALL REQUIREMENTS OF TDOT SPECIAL PROVISION 626.

3. COST OF ALL LABOR AND MATERIALS NECESSARY FOR THE DESIGN, FURNISHING, INSTALLATION, AND TESTING SHALL BE PAID FOR UNDER PRICE BID FOR ITEM NO. 626-01.01.

4. THE CONTRACTOR PERFORMING THE WORK SHALL HAVE PERSONNEL ON-SITE EXPERIENCED IN THE AGGREGATE FOUNDATIONS BEING INSTALLED AND SHALL MEET QUALIFICATIONS DESCRIBED IN TDOT SPECIAL PROVISION 626.

5. THE CONTRACTOR SHALL SUBMIT THE FOLLOWING ITEMS FOR REVIEW AND ACCEPTANCE BY THE ENGINEER NO LESS THAN SIXTY (60) CALENDAR DAYS PRIOR TO BEGINNING CONSTRUCTION OF THE AGGREGATE FOUNDATIONS:

   A. DESIGN AND DETAILS OF THE AGGREGATE FOUNDATION SYSTEM

   B. DETAILED WORK PLAN

   C. QUALITY CONTROL PLAN

6. THE CONTRACTOR SHALL SUBMIT A VERIFICATION PLAN AS DESCRIBED IN TDOT SPECIAL PROVISION 626 SUBJECT TO APPROVAL BY THE ENGINEER.

NOT FOR BIDDING
FOR INFORMATION ONLY

COORDINATES ARE NAD 83(1983), ARE DATUM ADJUSTED BY THE FACTOR OF 1.000082257 AND TIED TO THE TGRN. ALL ELEVATIONS ARE REFERENCED TO THE NAVD 1988 WITH GEOID 2003.

SEALED BY

MARY K. ROTH
REGISTERED ENGINEER
No. 123609
STATE OF TENNESSEE
07/31/2020

HISTORIC FRANKLIN TENNESSEE

CITY OF FRANKLIN
ENGINEERING DEPARTMENT

AGGREGATE FOUNDATION SYSTEM LOCATION PLAN

7/30/2020 4:12:22 PM
Y:\Nashville\16019000S\16019033.00\Eng_Docs\Structures\DGN\Final Plans\SE Park_Aggregate Foundation Plan.dgn

TYPE	YEAR	PROJECT NO.	SHEET NO.
CONST.	2020	COF# 2019-0098	B36

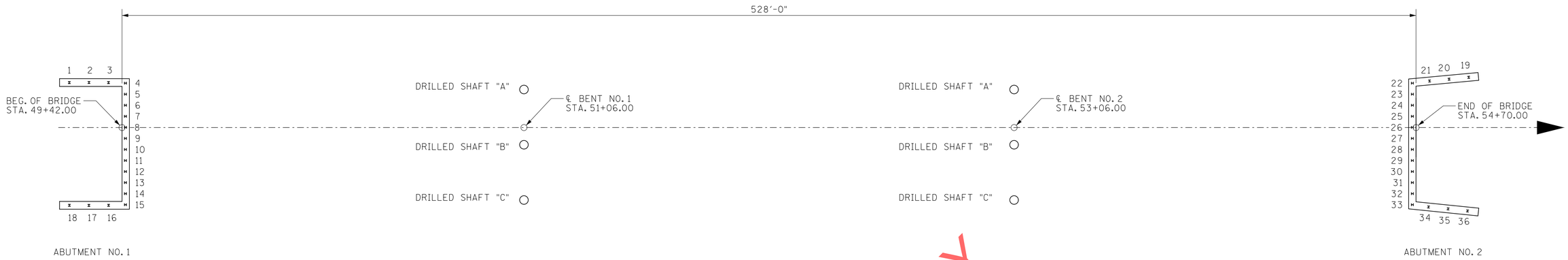

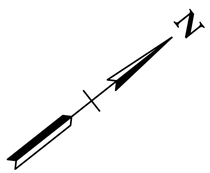

FOUNDATION PLAN

VOID FOR BIDDING
FOR INFORMATION ONLY

NOTE TO THE CONTRACTOR AND CONSTRUCTION OFFICE:
THE BLANKS ON THIS SHEET ARE TO BE FILLED ON BY THE CONSTRUCTION OFFICE AND/OR FIELD ENGINEER GIVING AS BUILT CONDITIONS. AFTER COMPLETION OF STRUCTURES, IT IS TO BE SENT TO THE OWNER TO BECOME PART OF THE FINAL BRIDGE DOCUMENTS.

		A	B	C
BENT NO. 1	TOP OF ROCK SOCKET			
	TIP ELEVATION			
BENT NO. 2	TOP OF ROCK SOCKET			
	TIP ELEVATION			

ABUTMENT NO. 1 PILE DATA

	1	2	3	4	5	6	7	8	9	10	11	12	13	14	15	16	17	18
PILE CUT-OFF ELEVATION																		
PILE TIP ELEVATION																		
IN PLACE PILE LENGTH																		

ABUTMENT NO. 2 PILE DATA

	19	20	21	22	23	24	25	26	27	28	29	30	31	32	33	34	35	36
PILE CUT-OFF ELEVATION																		
PILE TIP ELEVATION																		
IN PLACE PILE LENGTH																		

COORDINATES ARE NAD 83(1983), ARE DATUM ADJUSTED BY THE FACTOR OF 1.000082257 AND TIED TO THE TGRN. ALL ELEVATIONS ARE REFERENCED TO THE NAVD 1988 WITH GEOID 2003.

SEALED BY

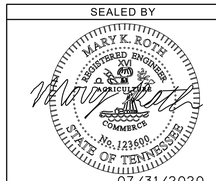

HISTORIC FRANKLIN TENNESSEE

CITY OF FRANKLIN
ENGINEERING DEPARTMENT

FINAL FOUNDATION DATA

7/30/2020 4:12:23 PM
Y:\Nashville\16019000S\16019033.00\Eng_Docs\Structures\DGN\Final Plans\SE Park_Bridge Final Foundation.dgn

TYPE	YEAR	PROJECT NO.	SHEET NO.
CONST.	2020	COF# 2019-0098	B37

SUPERSTRUCTURE - EPOXY

BAR	LOCATION	SIZE	NO. REQ'D.	BENDING DIMENSIONS A	B	C	D	TOTAL LENGTH
A401E	ALL RAILS	4	198	60'-0"				60'-0"
A402E	ALL RAILS	4	22	5'-8"				5'-8"
A500E	SUPERSTRUCTURE	5	2112	51'-4"				51'-4"
A501E	SUPERSTRUCTURE	5	585	50'-2"				50'-2"
A601E	SUPERSTRUCTURE	6	1098	50'-2"				50'-2"
B571E	TRAFFIC RAIL	5	2264	3'-9"				4'-3"
H501E	TRAFFIC RAIL	5	529	1'-0"	3'-6"			8'-0"
H502E	MEDIAN RAIL	5	529	0'-8"	3'-3"			7'-3"
H503E	PEDESTRIAN RAIL	5	74	1'-0"	3'-3"			7'-6"
HP501E	PEDESTRIAN RAIL	5	468	1'-4"	0'-10"			4'-0"
L501E	TRAFFIC RAIL	5	205	1'-0"	1'-0"			4'-6"

ABUTMENT NO. 1 - NON-EPOXY

BAR	LOCATION	SIZE	NO. REQ'D.	BENDING DIMENSIONS A	B	C	D	TOTAL LENGTH
A440	ROADWAY BRACKET	4	1	48'-0"				48'-0"
A442	WINGWALL	4	26	6'-0"				6'-0"
A443	WINGWALL	4	14	26'-8"				26'-8"
A444	WINGWALL	4	26	6'-2"				6'-2"
A500	ENDWALL-BLOCKOUT	5	24	1'-6"				1'-6"
A501	ENDWALL-BLOCKOUT	5	8	2'-6"				2'-6"
A502	ENDWALL-BLOCKOUT	5	8	2'-4"				2'-4"
A540	ABUTMENT BEAM	5	2	52'-6"				52'-6"
A541	WING BEAM	5	4	28'-0"				28'-0"
A641	ENDWALL	6	14	51'-4"				51'-4"
A642	WINGWALL	6	26	6'-0"				6'-0"
A643	WINGWALL	6	14	26'-8"				26'-8"
A644	ENDWALL	6	8	3'-6"				3'-6"
A645	WINGWALL	6	26	6'-2"				6'-2"
A740	ABUTMENT BEAM	7	10	52'-6"				52'-6"
A741	WING BEAM	7	20	28'-0"				28'-0"
B640	ENDWALL	6	14	4'-6"				5'-0"
H450	RISER BLOCK	4	4	1'-4"	3'-4"			6'-0"
H451	RISER BLOCK	4	8	1'-4"	1'-0"			3'-8"
H540	ROADWAY BRACKET	5	48	2'-2"	0'-6"			3'-2"
H641	ENDWALL	6	48	1'-2"	3'-6"			8'-2"
H642	WINGWALL	6	52	1'-4"	3'-6"			8'-4"
L541	ABUT./WING BEAM	5	105	2'-6"	2'-6"			10'-0"

ABUTMENT NO. 2 - NON-EPOXY

BAR	LOCATION	SIZE	NO. REQ'D.	BENDING DIMENSIONS A	B	C	D	TOTAL LENGTH
A441	ROADWAY BRACKET	4	1	48'-5"				48'-5"
A452	WINGWALL	4	14	26'-8"				26'-8"
A462	WINGWALL	4	26	5'-11"				5'-11"
A463	WINGWALL	4	26	5'-9"				5'-9"
A500	ENDWALL-BLOCKOUT	5	24	1'-6"				1'-6"
A501	ENDWALL-BLOCKOUT	5	8	2'-6"				2'-6"
A502	ENDWALL-BLOCKOUT	5	8	2'-4"				2'-4"
A550	ABUTMENT BEAM	5	2	52'-2"				52'-2"
A551	WING BEAM	5	4	27'-11"				27'-11"
A641	ENDWALL	6	14	51'-4"				51'-4"
A644	ENDWALL	6	8	3'-6"				3'-6"
A662	WINGWALL	6	14	26'-8"				26'-8"
A663	WINGWALL	6	26	5'-11"				5'-11"
A750	ABUTMENT BEAM	7	10	52'-2"				52'-2"
A751	WING BEAM	7	20	27'-11"				27'-11"
B640	ENDWALL	6	14	4'-6"				5'-0"
H450	RISER BLOCK	4	4	1'-4"	3'-4"			6'-0"
H451	RISER BLOCK	4	8	1'-4"	1'-0"			3'-8"
H540	ROADWAY BRACKET	5	48	2'-2"	0'-6"			3'-2"
H641	ENDWALL	6	48	1'-2"	3'-6"			8'-2"
H642	WINGWALL	6	52	1'-4"	3'-6"			8'-4"
L541	ABUT./WING BEAM	5	105	2'-6"	2'-6"			10'-0"

ABUTMENT NO. 1 - EPOXY

BAR	LOCATION	SIZE	NO. REQ'D.	BENDING DIMENSIONS A	B	C	D	TOTAL LENGTH
A400E	TRAFFIC/PED. RAIL	4	20	26'-8"				26'-8"
SERIES A403E	MEDIAN RAIL	4	2	5 BARS VARY FROM 34'-3" TO 16'-3" BY 4'-6"				126'-3"
A640E	ENDWALL/EDGE BEAM	6	6	51'-4"				51'-4"
A643E	ENDEWALL	6	104	6'-0"				6'-0"
B571E	ALL RAILS	5	148	3'-9"				4'-3"
SERIES B572E	MEDIAN RAIL	5	2	13 BARS VARY FROM 4'-0" TO 2'-0" BY 0'-2"				45'-6"
B573E	MEDIAN RAIL	5	6	2'-9"				3'-3"
F640E	ROADWAY BRACKET	6	48	1'-1"	1'-3"	1'-1"	1'-3"	4'-8"
H501E	TRAFFIC RAIL	5	29	1'-0"	3'-6"			8'-0"
H502E	MEDIAN RAIL	5	16	0'-8"	3'-3"			7'-3"
H503E	PEDESTRIAN RAIL	5	29	1'-0"	3'-3"			7'-6"
L400E	EDGE BEAM	4	53	1'-7"	1'-2"			6'-0"
L501E	PEDESTRIAN RAIL	5	10	1'-0"	1'-0"			4'-6"

ABUTMENT NO. 2 - EPOXY

BAR	LOCATION	SIZE	NO. REQ'D.	BENDING DIMENSIONS A	B	C	D	TOTAL LENGTH
A400E	TRAFFIC/PED. RAIL	4	20	26'-8"				26'-8"
SERIES A403E	MEDIAN RAIL	4	2	5 BARS VARY FROM 34'-3" TO 16'-3" BY 4'-6"				126'-3"
A640E	ENDWALL/EDGE BEAM	6	2	51'-4"				51'-4"
A643E	ENDEWALL	6	104	6'-0"				6'-0"
B571E	ALL RAILS	5	148	3'-9"				4'-3"
SERIES B572E	MEDIAN RAIL	5	2	13 BARS VARY FROM 4'-0" TO 2'-0" BY 0'-2"				45'-6"
B573E	MEDIAN RAIL	5	6	2'-9"				3'-3"
F640E	ROADWAY BRACKET	6	48	1'-1"	1'-3"	1'-1"	1'-3"	4'-8"
H501E	TRAFFIC RAIL	5	29	1'-0"	3'-6"			8'-0"
H502E	MEDIAN RAIL	5	16	0'-8"	3'-3"			7'-3"
H503E	PEDESTRIAN RAIL	5	29	1'-0"	3'-3"			7'-6"
L400E	EDGE BEAM	4	53	1'-7"	1'-2"			6'-0"
L501E	PEDESTRIAN RAIL	5	10	1'-0"	1'-0"			4'-6"

VOID FOR BIDDING
FOR INFORMATION ONLY

COORDINATES ARE NAD 83(1983), ARE DATUM ADJUSTED BY THE FACTOR OF 1.000082257 AND TIED TO THE TGRN. ALL ELEVATIONS ARE REFERENCED TO THE NAVD 1988 WITH GEOID 2003.

SEALED BY

MARY K. ROTH REGISTERED ENGINEER No. 123609 STATE OF TENNESSEE

07/31/2020

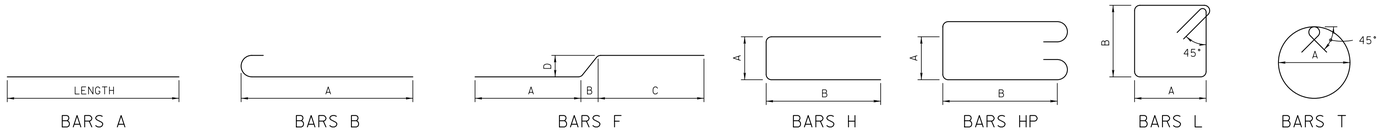

BARS A BARS B BARS F BARS H BARS HP BARS L BARS T

HISTORIC FRANKLIN TENNESSEE

CITY OF FRANKLIN
ENGINEERING DEPARTMENT

BILL OF STEEL

7/30/2020 4:12:24 PM
Y:\Nashville\16019000S\16019033.00\Eng_Docs\Structures\DGN\Final Plans\SE Park_BOS 1.dgn

TYPE	YEAR	PROJECT NO.	SHEET NO.
CONST.	2020	COF# 2019-0098	B38

BENT 1 - NON-EPOXY

BAR	LOCATION	SIZE	NO. REQ'D.	BENDING DIMENSIONS A	B	C	D	TOTAL LENGTH
A470	PIER CAP	4	4	2'-8"				2'-8"
A570	PIER CAP	5	4	51'-4"				51'-4"
A770	PIER CAP - SERIES	7	1	3 BARS 11'-0", 6'-6", 4'-3"				43'-6"
A771	PIER CAP - SERIES	7	2	3 BARS 7'-6", 5'-0", 3'-9"				65'-0"
A870	SQUARE COLUMN	8	66	17'-0"				17'-0"
A970	PIER CAP	9	10	51'-4"				51'-4"
A1070	PIER CAP	10	20	49'-10"				49'-10"
A1071	DRILLED SHAFT (5'-0" DIA.)	10	69	10'-0"				10'-0"
A1072	DRILLED SHAFT (3'-6" DIA.)	10	36	20'-7"				20'-7"
B970	PIER CAP	9	10	50'-8"				52'-8"
H450	RISER BLOCK	4	10	1'-4"	3'-4"			6'-0"
H451	RISER BLOCK	4	8	1'-4"	1'-0"			3'-8"
H670	PIER CAP	6	172	3'-2"	3'-8"			10'-6"
H671	PIER CAP	6	16	3'-2"	4'-6"			12'-2"
H672	PIER CAP	6	8	3'-2"	6'-3"			15'-8"
L670	SQUARE COLUMN	6	30	3'-2"	3'-2"			12'-8"
T671	DRILLED SHAFT (5'-0" DIA.)	6	63	4'-6"				14'-9"
T672	DRILLED SHAFT (3'-6" DIA.)	6	90	3'-0"				10'-0"
X670	PIER CAP	6	8	19'-4"	3'-2"			21'-6"

BENT 2 - NON-EPOXY

BAR	LOCATION	SIZE	NO. REQ'D.	BENDING DIMENSIONS A	B	C	D	TOTAL LENGTH
A470	PIER CAP	4	4	2'-8"				2'-8"
A570	PIER CAP	5	4	51'-4"				51'-4"
A770	PIER CAP - SERIES	7	1	3 BARS 11'-0", 6'-6", 4'-3"				43'-6"
A771	PIER CAP - SERIES	7	2	3 BARS 7'-6", 5'-0", 3'-9"				65'-0"
A871	SQUARE COLUMN	8	66	16'-2"				16'-2"
A970	PIER CAP	9	10	51'-4"				51'-4"
A1070	PIER CAP	10	20	49'-10"				49'-10"
A1072	DRILLED SHAFT (3'-6" DIA.)	10	36	20'-7"				20'-7"
A1073	DRILLED SHAFT (5'-0" DIA.)	10	69	22'-6"				22'-6"
B970	PIER CAP	9	10	50'-8"				52'-8"
H450	RISER BLOCK	4	10	1'-4"	3'-4"			6'-0"
H451	RISER BLOCK	4	8	1'-4"	1'-0"			3'-8"
H670	PIER CAP	6	172	3'-2"	3'-8"			10'-6"
H671	PIER CAP	6	16	3'-2"	4'-6"			12'-2"
H672	PIER CAP	6	8	3'-2"	6'-3"			15'-8"
L670	SQUARE COLUMN	6	27	3'-2"	3'-2"			12'-8"
T671	DRILLED SHAFT (5'-0" DIA.)	6	138	4'-6"				14'-9"
T672	DRILLED SHAFT (3'-6" DIA.)	6	90	3'-0"				10'-0"
X670	PIER CAP	6	8	19'-4"	3'-2"			21'-6"

VOID FOR BIDDING
FOR INFORMATION ONLY

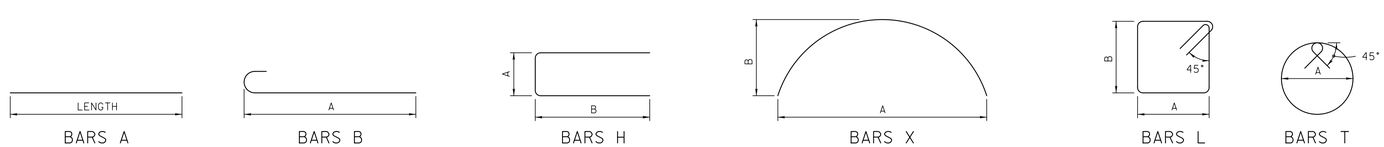

COORDINATES ARE NAD 83(1983), ARE DATUM ADJUSTED BY THE FACTOR OF 1.000082257 AND TIED TO THE TGRN. ALL ELEVATIONS ARE REFERENCED TO THE NAVD 1988 WITH GEOID 2003.

SEALED BY

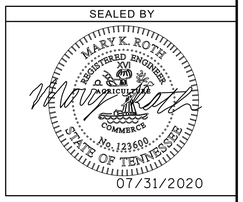

HISTORIC FRANKLIN TENNESSEE

CITY OF FRANKLIN
ENGINEERING DEPARTMENT

BILL OF STEEL

7/30/2020 4:12:25 PM
Y:\Nashville\16019000S\16019033.00\Eng_Docs\Structures\DGN\Final Plans\SE Park_BOS 2.dgn

TYPE	YEAR	PROJECT NO.	SHEET NO.
CONST.	2020	COF# 2019-0098	G1

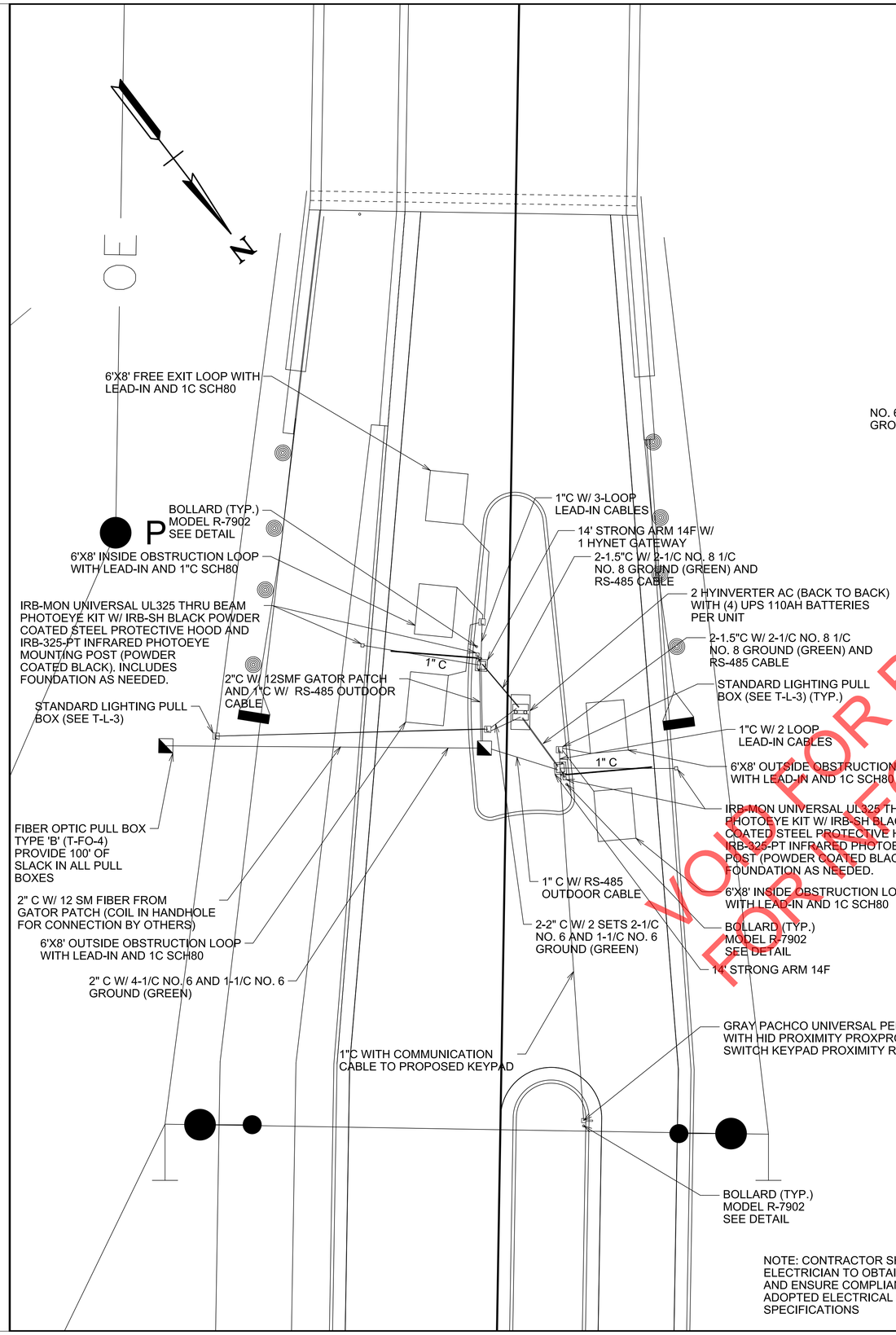

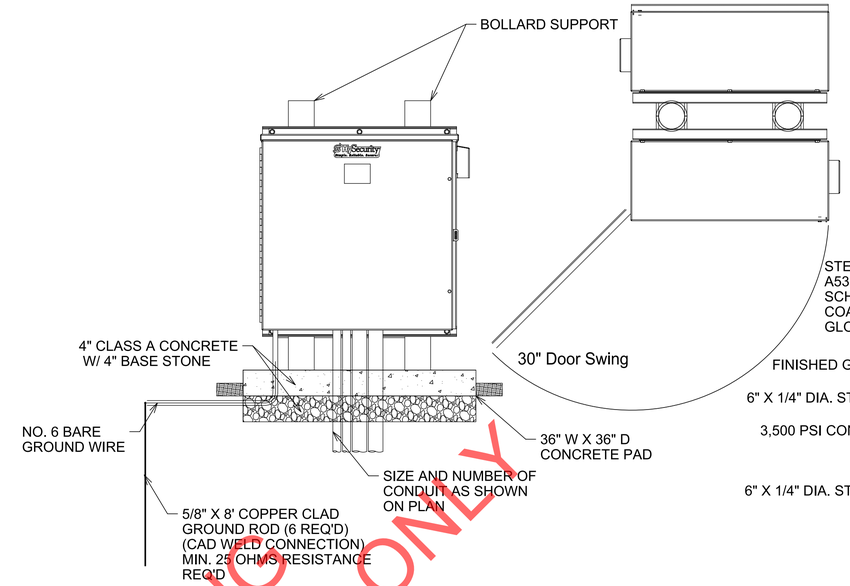

HyInverter AC

N.T.S

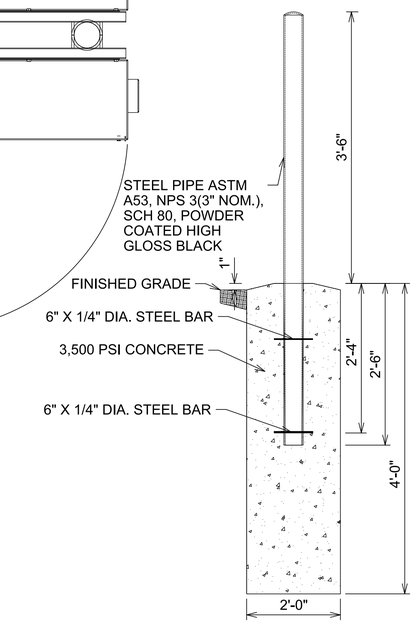

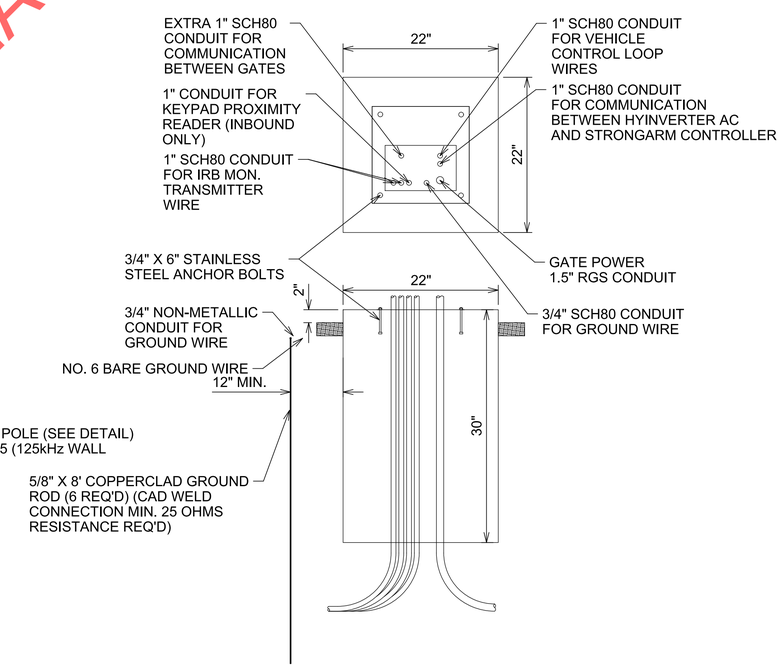

GENERAL NOTES:

1) ALL CONDUIT TO UTILIZE LARGE SWEEP RADII (MIN. 6" RADIUS)

2) MIN. OF 1 GROUNDS REQUIRED IN CABINET AND FOUNDATION

StrongArm 14F FOUNDATION DETAIL

N.T.S

NOTE: CONTRACTOR SHALL HIRE A LICENSED ELECTRICIAN TO OBTAIN ALL ELECTRICAL PERMITS AND ENSURE COMPLIANCE WITH CITY OF FRANKLIN ADOPTED ELECTRICAL CODE AND MANUFACTURERS SPECIFICATIONS

COORDINATES ARE NAD 83(1983), ARE DATUM ADJUSTED BY THE FACTOR OF 1.000082257 AND TIED TO THE TGRN. ALL ELEVATIONS ARE REFERENCED TO THE NAVD 1988 WITH GEOID 2003.

SEALED BY

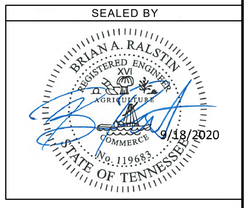

HISTORIC FRANKLIN TENNESSEE

CITY OF FRANKLIN
ENGINEERING DEPARTMENT

GATE DETAIL

SCALE: 1"= 10'

VOID FOR BIDDING FOR INFORMATION ONLY

9/21/2020 8:42:34 AM
Y:\Nashville\16019000S\16019033.00\Eng_Docs\Roadway\020 Gate Detail Sheet.sht

TYPE	YEAR	PROJECT NO.	SHEET NO.
CONST.	2020	COF# 2019-0098	G2

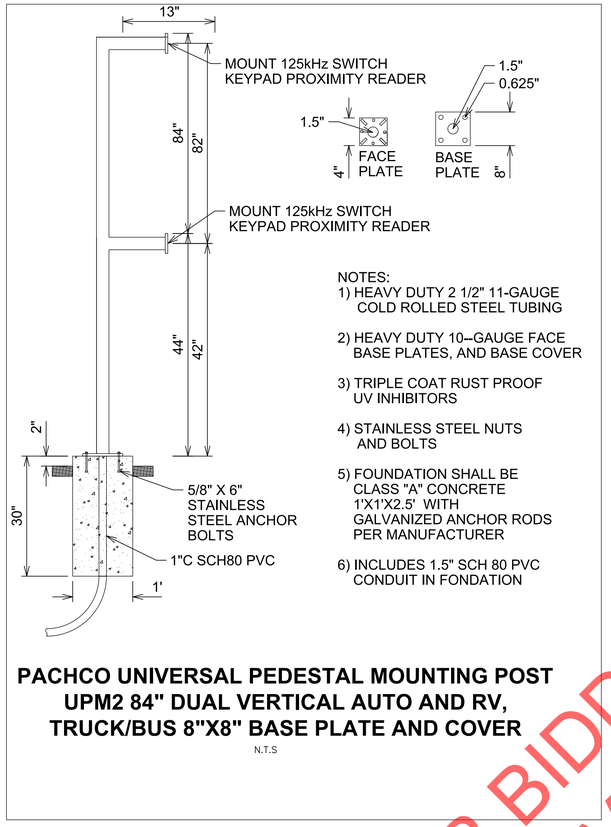

PACHCO UNIVERSAL PEDESTAL MOUNTING POST UPM2 84" DUAL VERTICAL AUTO AND RV, TRUCK/BUS 8"X8" BASE PLATE AND COVER

N.T.S

LTR	DESCRIPTION	DATE	APPRVD
A	INITIAL RELEASE FOR ENGINEERING.	5/31/2018	RAW

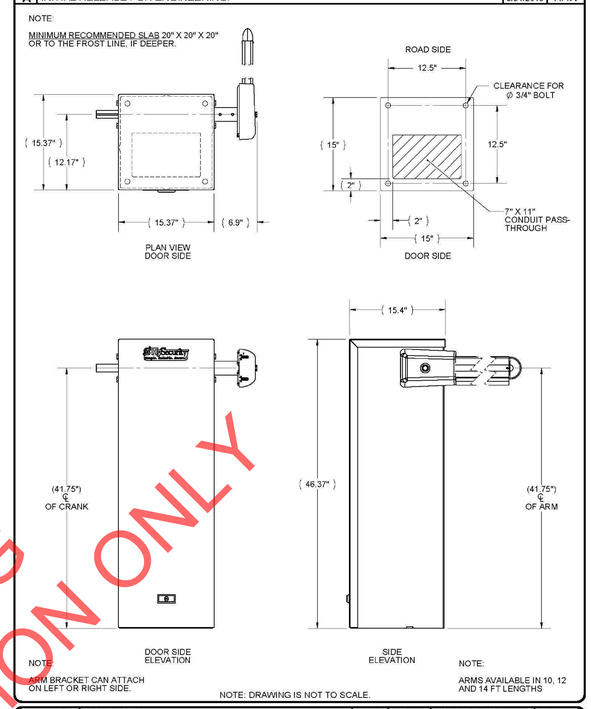

DOCUMENT TITLE	DRAWN / DATE	DOCUMENT NUMBER	REV
HySecurity Gate Technology — StrongArm 14F - Lighted Al Arm W / Break Away, Chassis Detail	RAW 5/23/2018	D0895	A
	CHECKED / DATE	THIRD ANGLE PROJECTION	SHT 1 OF 1
	APPROVED / DATE		

VOID FOR BIDDING
FOR INFORMATION ONLY

ESTIMATED GATE QUANTITIES

	ITEM NO.	DESCRIPTION	UNIT	QUANTITY
	714-03.03	DIRECT BURIAL CONDUIT (2" PVC, SCHEDULE 80)	L.F.	65
	714-03.04	DIRECT BURIAL CONDUIT (1 1/2" PVC, SCHEDULE 80)	L.F.	38
	714-03.05	DIRECT BURIAL CONDUIT (1" PVC, SCHEDULE 80)	L.F.	159
	714-06.04	CABLE (1/C # 8 AWG)	L.F.	296
	714-06.05	CABLE (1/C # 6 AWG)	L.F.	1160
	725-24.10	CABINET BOLLARD	EACH	2
(1)	730-13.08	LOOP DETECTOR 6'X8'	EACH	5
	730-14.01	LOOP LEAD-IN CABLE (SHIELDED DETECTOR CABLE)	L.F.	75
	795-51.01	BOLLARD	EACH	3
	798-05.71	RS-485 COMMUNICATION CABLE	L.F.	49
(2)	798-05.72	HYSECURITY - HYINVERTER AC WITH WORKING PAD	EACH	2
(3)	798-05.73	HYSECURITY - STRONGARM 14F	EACH	2
(6)	798-05.74	HYSECURITY - HYNET GATEWAY	EACH	1
(4)	798-05.75	HID - PROXIMITY PROXPRO WITH KEYPAD 5355	EACH	1
(5)	798-05.76	GATORPATCH PANEL, 2 STEP	EACH	1

(1) LOOP DETECTOR 6'X8' SHALL INCLUDE THE SAWCUT AND RUN OF THE LOOP DETECTOR THROUGH THE CURB LINE.

(2) HYINVERTER AC SHALL INCLUDE 4- 110AH BATTERIES IN EACH UNIT.

(3) THE HYSECURITY SHALL INCLUDE ALL PROGRAMMING REQUIRED FOR THE SITE TO BE OPERATIONAL.

(4) THE KEYPAD SHALL ALSO INCLUDE THE PACHCO UNIVERSAL MOUNT AS WELL AS ALL CABLES TO CONNECT THE KEYPAD TO THE GATE SYSTEM.

(5) THE GATORPATCH PANEL SHALL BE MODEL G620U012LAB-40-0.

(6) THE HYNET GATEWAY SHALL INCLUDE AN LC DUPLEX SFP MODULE AND LC JUMPER CABLE TO CONNECT THE GATEWAY TO THE GATORPATCH PANEL.

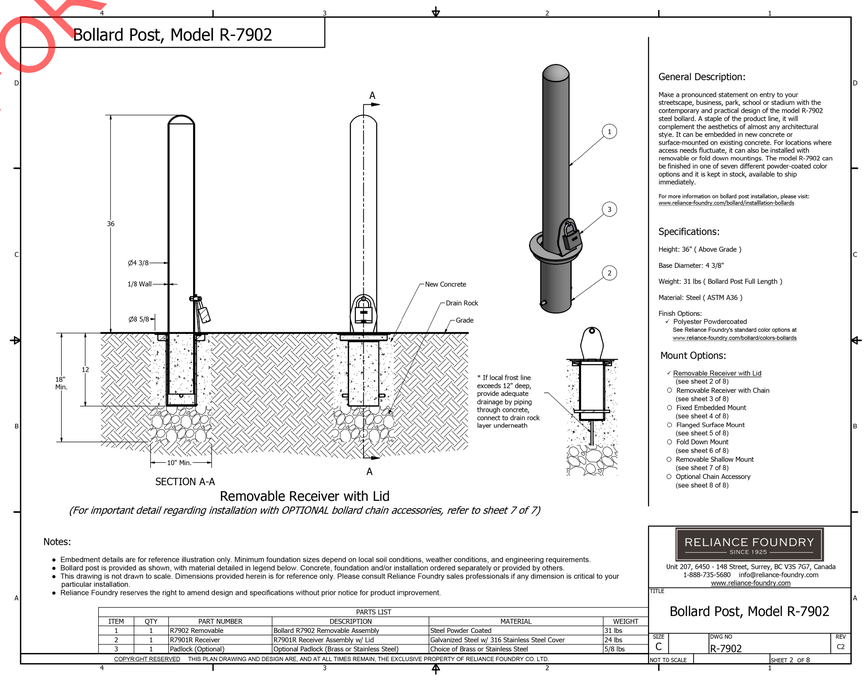

COORDINATES ARE NAD 83(1983), ARE DATUM ADJUSTED BY THE FACTOR OF 1.000082257 AND TIED TO THE TGRN. ALL ELEVATIONS ARE REFERENCED TO THE NAVD 1988 WITH GEOID 2003.

SEALED BY

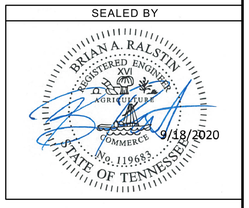

HISTORIC FRANKLIN TENNESSEE

CITY OF FRANKLIN
ENGINEERING DEPARTMENT

GATE DETAIL

SCALE: 1"= 10'

9/21/2020 8:42:36 AM
Y:\Nashville\16019000S\16019033.00\Eng_Docs\Roadway\021 Gate Detail Sheet2.sht

TYPE	YEAR	PROJECT NO.	SHEET NO.
			S-1

SWPPP INDEX OF SHEETS

DESCRIPTION	SHT.
1. SWPPP REQUIREMENTS (3.0)	1
2. SITE DESCRIPTION (3.5.1)	1
3. ORDER OF CONSTRUCTION ACTIVITIES (3.5.1.b, 3.5.2.a)	1
4. STREAM, OUTFALL, WETLAND, TMDL AND ECOLOGY INFORMATION	1
5. EROSION PREVENTION AND SEDIMENT CONTROL (EPSC) MEASURES (3.5.3)	2
6. FLOCCULANTS (3.5.3.1.b)	3
7. UTILITY RELOCATION	3
8. MAINTENANCE AND INSPECTION	4
9. SITE ASSESSMENTS (3.1.2)	4
10. STORMWATER MANAGEMENT (3.5.4)	4
11. NON-STORMWATER DISCHARGES (3.5.9)	5
12. SPILL PREVENTION, MANAGEMENT AND NOTIFICATION (3.5.5.c, 5.1)	5
13. RECORD-KEEPING	6
14. SITE WIDE/PRIMARY PERMITTEE CERTIFICATION (7.7.5)	7
15. SECONDARY PERMITTEE (OPERATOR) CERTIFICATION (7.7.6)	7
16. ENVIRONMENTAL PERMITS (9.0)	7
17. OUTFALL TABLE (3.5.1.d, 5.4.1.g)	8
18. OUTFALL TABLE (3.5.1.d, 5.4.1.g)	9
19. OUTFALL TABLE (3.5.1.d, 5.4.1.g)	10
20. OUTFALL TABLE (3.5.1.d, 5.4.1.g)	11
21. OUTFALL TABLE (3.5.1.d, 5.4.1.g)	12

NOTE: CITATIONS IN PARENTHESIS INDICATE SECTIONS OF THE CURRENT CGP.

1. SWPPP REQUIREMENTS (3.0)

1.1. HAS THE SWPPP TEMPLATE BEEN PREPARED BY AN INDIVIDUAL THAT HAS THE FOLLOWING LICENSING AND/OR CERTIFICATIONS (3.1.1)?

☒ YES (CHECK ALL THAT APPLY BELOW) OR ☐ NO

☐ CERTIFIED PROFESSIONAL IN EROSION AND SEDIMENT CONTROL (CPESC)

☒ A TN LICENSED PROFESSIONAL ENGINEER OR LANDSCAPE ARCHITECT

☒ HAS SUCCESSFULLY COMPLETED TDEC LEVEL II COURSE

1.2. DO THE EPSC PLANS INVOLVE STRUCTURAL DESIGN, HYDRAULIC, HYDROLOGIC OR OTHER ENGINEERING CALCULATIONS FOR EPSC STRUCTURAL MEASURES (E.G. SEDIMENT BASINS) (3.1.1)? YES ☐ NO ☒

IF YES, HAVE THE EPSC PLANS BEEN PREPARED, STAMPED AND CERTIFIED BY A TN LICENSED PROFESSIONAL ENGINEER OR LANDSCAPE ARCHITECT? ☐ YES ☐ NO

1.3. DO THE PROJECT STORMWATER OUTFALLS DIRECTLY DISCHARGE INTO THE FOLLOWING (5.4.1)? ☒ YES (CHECK ALL THAT APPLY BELOW) ☐ NO

☒ WATERS WITH UNAVAILABLE PARAMETERS (303d FOR SILTATION OR HABITAT ALTERATION)

☐ EXCEPTIONAL TENNESSEE WATERS

IF YES TO SECTION 1.3, HAS THE SWPPP TEMPLATE BEEN PREPARED BY AN INDIVIDUAL THAT HAS THE FOLLOWING LICENSING AND/OR CERTIFICATIONS (5.4.1.b)?

☒ YES (CHECK ALL THAT APPLY BELOW) ☐ NO

☐ CERTIFIED PROFESSIONAL IN EROSION AND SEDIMENT CONTROL (CPESC)

☒ A TN LICENSED PROFESSIONAL ENGINEER OR LANDSCAPE ARCHITECT

☒ HAS SUCCESSFULLY COMPLETED TDEC LEVEL II COURSE

2. SITE DESCRIPTION (3.5.1)

2.1. PROJECT LIMITS (3.5.1.h): REFER TO TITLE SHEET

2.2. PROJECT DESCRIPTION (3.5.1.a):

TITLE: CAROTHERS PARKWAY WIDENING AND SOUTHEAST MUNICIPAL COMPLEX ENTRANCE
COUNTY: WILLIAMSON
PIN:NA

2.3. SITE MAP(S) (2.6.2.): REFER TO TITLE SHEET

2.4. DESCRIPTION OF EXISTING SITE TOPOGRAPHY (3.5.1.d): REFER TO EXISTING CONTOURS SHEET(S) 7-7D, DRAINAGE MAP SHEET(S) N/A, USGS QUAD MAP, AND THE OUTFALL TABLE IN SECTION 4.3.

2.5. MAJOR SOIL DISTURBING ACTIVITIES (3.5.1.b) (CHECK ALL THAT APPLY):

☒ CLEARING AND GRUBBING
☒ EXCAVATION
☒ CUTTING AND FILLING
☒ FINAL GRADING AND SHAPING
☒ UTILITIES
☐ OTHER (DESCRIBE): _____

2.6. TOTAL PROJECT AREA (3.5.1.c): 13.98 ACRES

2.7. TOTAL AREA TO BE DISTURBED (3.5.1.c): 13.98 ACRES

2.8. NO MORE THAN 50 ACRES OF ACTIVE SOIL DISTURBANCE IS ALLOWED AT ANY TIME DURING THE CONSTRUCTION OF THE PROJECT.

2.9. ARE THERE ANY SEASONAL LIMITATIONS ON WORK? ☐ YES ☒ NO

IF YES, LIST THE CORRESPONDING PLAN SHEET: _____

2.10. WAS ROW FINALIZED PRIOR TO FEBRUARY 1, 2010 (4.1.2.2)?

☐ YES _____ (DATE) ☒ NO

IF ROW WAS FINALIZED PRIOR TO FEBRUARY 1, 2010, THIS PROJECT IS CONSIDERED A PRE-APPROVED SITE (4.1.2.2)

2.11. SOIL PROPERTIES (3.5.1.f) (4.1.1).

SOIL PROPERTIES FOR THE PRIMARY SOILS ARE LISTED IN THE TABLE BELOW.

SOIL PROPERTIES			
PRIMARY SOIL NAME	HSG	% OF SITE	ERODIBILITY (k value)
ARMOUR SILT LOAM	B	14.6%	0.43
HAMPSHIRE-COLBERT SILTY CLAY LOAMS	C/D	2.3%	0.40
HUNTINGTON SILT LOAM	B	72.2%	0.37
SEQUATCHIE LOAM	B	9.8%	0.32

2.12. IS ACID PRODUCING ROCK (APR) (i.e. PYRITE) LOCATED WITHIN THE PROJECT LIMITS? ☐ YES ☒ NO

2.12.1. IF YES TO SECTION 2.13, HAVE APR LOCATIONS BEEN IDENTIFIED WITHIN THE CONSTRUCTION PLANS AND/OR THE GEOTECHNICAL REPORT? ☐ YES ☐ NO; AND

2.12.2. IF YES TO SECTION 2.12.1, HAS A SPECIAL HANDLING PLAN AND/OR ADAPTIVE MANAGEMENT PLAN (AMP) BEEN PREPARED FOR THE PROJECT? ☐YES ☐ NO ☐ N/A (TDOT SP107L WILL BE APPLIED.)

2.13. PROJECT RUNOFF COEFFICIENTS AND AREA PERCENTAGES (3.5.1.g).

RUNOFF COEFFICIENTS FOR EXISTING CONDITIONS				
AREA TYPE	AREA(AC)	PERCENTAGE OF TOTAL AREA (%)	RUNOFF CN	C FACTOR
IMPERVIOUS	1.73	11%	-	0.90
PERVIOUS	14.42	89%	-	0.30
WEIGHTED CURVE NUMBER OR C-FACTOR =				0.37

RUNOFF COEFFICIENTS FOR POST-CONSTRUCTION CONDITIONS				
AREA TYPE	AREA(AC)	PERCENTAGE OF TOTAL AREA (%)	RUNOFF CN	C FACTOR
IMPERVIOUS	3.45	21%	-	0.90
PERVIOUS	12.70	79%	-	0.30
WEIGHTED CURVE NUMBER OR C-FACTOR =				0.43

3. ORDER OF CONSTRUCTION ACTIVITIES (3.5.1.b, 3.5.2.a)

CONSTRUCTION SHALL BE SEQUENCED AND STAGED TO: MINIMIZE THE EXPOSURE TIME OF GRADED OR DENUDED SOIL AREAS, PRESERVE TOPSOIL, AND MINIMIZE SOIL COMPACTION. NO WORK SHALL BE STARTED UNTIL THE CONTRACTOR'S PLAN FOR THE STAGING OF THEIR OPERATIONS, INCLUDING THE PLAN FOR STAGING OF TEMPORARY AND PERMANENT EPSC MEASURES, HAS BEEN ACCEPTED BY THE ENGINEER. THE CONTRACTOR'S EPSC PLAN SHALL INCORPORATE AND SUPPLEMENT, AS ACCEPTABLE, THE ORDER OF CONSTRUCTION ACTIVITIES AND THE BASIC EPSC DEVICES DEPICTED ON THE EPSC PLAN CONTAINED WITHIN THE APPROVED SWPPP.

3.1. SPECIAL SEQUENCING REQUIREMENTS (SEE SHEETS N/A)

3.2. INSTALL STABILIZED CONSTRUCTION EXITS.

3.3. INSTALL PERIMETER PROTECTION WHERE RUNOFF SHEET FLOWS FROM THE SITE.

3.4. INSTALL INITIAL EPSC MEASURES BEFORE CLEARING, GRUBBING, EXCAVATION, GRADING, CULVERT OR BRIDGE CONSTRUCTION, CUTTING, FILLING, OR ANY OTHER EARTHWORK OCCURS, EXCEPT AS SUCH WORK MAY BE NECESSARY TO INSTALL EPSC MEASURES.

3.5. PERFORM CLEARING AND GRUBBING (NOT MORE THAN 14 DAYS PRIOR TO GRADING OR EARTH-MOVING. REFER TO THE STABILIZATION PRACTICES BELOW.).

3.6. REMOVE AND STORE TOPSOIL.

3.7. STABILIZE DISTURBED AREAS WITHIN 14 DAYS OF COMPLETING ANY STAGE AND/OR PHASE OF ACTIVITY.

3.8. INSTALL UTILITIES, STORM SEWERS, CULVERTS AND BRIDGE STRUCTURES.

3.9. INSTALL INLET AND CULVERT PROTECTION ONCE STRUCTURES ARE IN PLACE AND CAPABLE OF INTERCEPTING FLOW.

3.10. PERFORM FINAL GRADING AND INSTALL BASE STONE.

3.11. COMPLETE FINAL PAVING AND SEALING OF CONCRETE.

3.12. INSTALL TRAFFIC CONTROL AND PROTECTION DEVICES.

3.13. COMPLETE FINAL STABILIZATION (TOPSOIL, SEEDING, MULCH, EROSION CONTROL BLANKET, SOD, ETC.)

3.14. REMOVE TEMPORARY EROSION CONTROLS AND ACCUMULATED SEDIMENT FROM AREAS THAT HAVE ESTABLISHED AT LEAST 70 PERCENT UNIFORM PERMANENT VEGETATIVE COVER.

3.15. RE-STABILIZE AREAS DISTURBED BY REMOVAL ACTIVITIES.

4. STREAM, OUTFALL, WETLAND, TMDL AND ECOLOGY INFORMATION

4.1. STREAM INFORMATION (3.5.1.j, 3.5.1.k)

4.1.1. WILL CONSTRUCTION AND/OR EROSION PREVENTION AND SEDIMENT CONTROLS IMPACT ANY STREAMS WITHIN THE PROJECT LIMITS? ☒ YES ☐ NO

IF YES, THE IMPACT(S) HAVE BEEN INCLUDED IN THE TOTAL PROJECT IMPACTS AND HAVE BEEN INCLUDED IN THE WATER QUALITY PERMITS.

4.1.2. HAVE ANY OF THE RECEIVING STATE WATERS LESS THAN OR EQUAL TO 1 FLOW MILE DOWN GRADIENT OF THE PROJECT LIMITS BEEN CLASSIFIED BY TDEC AS FOLLOWS (CHECK ALL THAT APPLY):

☒ 303d WITH UNAVAILABLE PARAMETERS FOR SILTATION

☐ 303d WITH UNAVAILABLE PARAMETERS FOR HABITAT ALTERATION

☐ EXCEPTIONAL TENNESSEE WATERS (ETW)

4.1.3. RECEIVING WATERS OF THE STATE (3.5.1.k).

RECEIVING WATERS OF THE STATE INFORMATION					
STATE WATER LABEL FROM EBR	NAME OF RECEIVING STATE WATER	303d WITH UNAVAILABLE PARAMETERS FOR SILTATION OR HABITAT ALTERATION (YES OR NO)	ETW (YES OR NO)	LOCATED WITHIN PROJECT LIMITS (YES OR NO)	LOCATED WITHIN ≤ 1 FLOW MILE DOWN GRADIENT OF PROJECT LIMITS (YES OR NO)
	HARPETH RIVER	YES	NO	YES	YES

HISTORIC FRANKLIN TENNESSEE

BRIAN A. RALSTIN REGISTERED ENGINEER XVI AGRICULTURE COMMERCE NO. 119683 STATE OF TENNESSEE 7/31/2020

CITY OF FRANKLIN
ENGINEERING DEPARTMENT

STORMWATER POLLUTION PREVENTION PLAN

VOID FOR BIDDING
FOR INFORMATION ONLY

RECEIVING WATERS OF THE STATE INFORMATION					
STATE WATER LABEL FROM EBR	NAME OF RECEIVING STATE WATER	303d WITH UNAVAILABLE PARAMETERS FOR SILTATION OR HABITAT ALTERATION (YES OR NO)	ETW (YES OR NO)	LOCATED WITHIN PROJECT LIMITS (YES OR NO)	LOCATED WITHIN ≤ 1 FLOW MILE DOWN GRADIENT OF PROJECT LIMITS (YES OR NO)

4.1.4. ARE THERE ANY WATER QUALITY RIPARIAN BUFFER ZONES REQUIRED FOR WATERS OF THE STATE? (4.1.2, 5.4.2)

☒ YES ☐ NO

BUFFER ZONE REQUIREMENTS ARE NOT REQUIRED FOR PRE-APPROVED SITES (4.1.2.2.)

IF YES, THEY HAVE BEEN INCLUDED ON PLAN SHEET(S) 7-7M.

IF YES, CHECK THE APPROPRIATE BOX BELOW FOR SIZE OF BUFFER.

☒ 60-FEET FOR WATERS WITH UNAVAILABLE PARAMETERS AND EXCEPTIONAL TENNESSEE WATERS (AVERAGE WIDTH PER SIDE WITH A MINIMUM OF 30-FEET).

A 60 FOOT NATURAL WATER QUALITY RIPARIAN BUFFER ZONE ADJACENT TO AND ON BOTH SIDES OF THE RECEIVING STATE STREAM WITH THIS DESIGNATION SHALL BE PRESERVED TO THE MAXIMUM EXTENT PRACTICABLE DURING CONSTRUCTION ACTIVITIES AT THE SITE. THE 60 FOOT CRITERION FOR THE WIDTH OF THE BUFFER ZONE CAN BE ESTABLISHED ON AN AVERAGE WIDTH BASIS AT A PROJECT, AS LONG AS THE MINIMUM WIDTH OF THE BUFFER ZONE IS MORE THAN 30 FEET AT ANY MEASURED LOCATION. IF THE CONSTRUCTION SITE ENCOMPASSES BOTH SIDES OF A STREAM, BUFFER AVERAGING CAN BE APPLIED TO BOTH SIDES, BUT MUST BE APPLIED INDEPENDENTLY.

☐ 30-FEET FOR ALL OTHER STREAMS (AVERAGE WIDTH PER SIDE WITH A MINIMUM OF 15-FEET).

A 30 FOOT NATURAL WATER QUALITY RIPARIAN BUFFER ZONE ADJACENT TO AND ON BOTH SIDES OF THE RECEIVING STATE STREAM SHALL BE PRESERVED TO THE MAXIMUM EXTENT PRACTICABLE DURING CONSTRUCTION ACTIVITIES AT THE SITE. THE 30 FOOT CRITERION FOR THE WIDTH OF THE BUFFER ZONE CAN BE ESTABLISHED ON AN AVERAGE WIDTH BASIS AT A PROJECT, AS LONG AS THE MINIMUM WIDTH OF THE BUFFER ZONE IS MORE THAN 15 FEET AT ANY MEASURED LOCATION. IF THE CONSTRUCTION SITE ENCOMPASSES BOTH SIDES OF A STREAM, BUFFER AVERAGING CAN BE APPLIED TO BOTH SIDES, BUT MUST BE APPLIED INDEPENDENTLY.

4.1.5. ARE THERE ANY WATER QUALITY RIPARIAN BUFFER ZONES NOT REQUIRED FOR STATE WATERS DUE TO A TDEC ARAP? (9.0)

☐ YES ☒ NO

4.1.6. ARE THERE WATER QUALITY RIPARIAN BUFFER ZONE EXEMPTIONS? (4.1.2.1) ☐ YES ☒ NO

IF YES, EXISTING CONDITIONS DESCRIPTION:_____

4.1.7. EVERY ATTEMPT SHOULD BE MADE FOR CONSTRUCTION ACTIVITIES TO NOT TAKE PLACE WITHIN THE WATER QUALITY RIPARIAN BUFFER ZONE AND FOR EXISTING FORESTED AREAS TO BE PRESERVED. (5.4.2.)

4.1.8. BECAUSE OF HEAVY SEDIMENT LOAD ASSOCIATED WITH CONSTRUCTION SITE RUNOFF, WATER QUALITY RIPARIAN BUFFER ZONES ARE NOT SEDIMENT CONTROL MEASURES AND SHOULD NOT BE RELIED UPON AS PRIMARY SEDIMENT CONTROL MEASURES. THE WATER QUALITY RIPARIAN BUFFER ZONE SHALL BE ESTABLISHED BETWEEN THE TOP OF THE STREAM BANK AND THE DISTURBED CONSTRUCTION AREA.

4.1.9. WHERE IT IS NOT PRACTICABLE TO MAINTAIN A FULL WATER QUALITY RIPARIAN BUFFER, BEST MANAGEMENT PRACTICES (BMPS) PROVIDING EQUIVALENT PROTECTION AS THE NATURAL RIPARIAN ZONE MUST BE USED. A JUSTIFICATION FOR USE AND DESIGN EQUIVALENCY SHALL BE DOCUMENTED WITHIN THE SWPPP. THE ENVIRONMENTAL AND ROADWAY DESIGN DIVISIONS SHALL REVIEW AND APPROVE THIS REVISION OF THE SWPPP BEFORE DISTURBANCE OF THE SITE PROCEEDS, UNLESS PREVIOUSLY EXEMPT IN THE NPDES CGP. WHERE ISSUED, ARAP/401 REQUIREMENTS WILL PREVAIL IF IN CONFLICT WITH THESE BUFFER ZONE REQUIREMENTS.

4.2. RECEIVING WATERS OF THE UNITED STATES (WOTUS) (EPHEMERAL)

WILL CONSTRUCTION AND/OR EROSION AND SEDIMENT CONTROLS IMPACT ANY WOTUS (EPHEMERAL)? ☐ YES ☒ NO

RECEIVING WOTUS (EPHEMERAL) INFORMATION		
TDOT WOTUS LABEL	LOCATED WITHIN PROJECT LIMITS (YES OR NO)	LOCATED WITHIN 15-FT OF THE PROJECT LIMITS (YES OR NO)

4.2.1. ARE WATER QUALITY RIPARIAN BUFFER ZONES REQUIRED FOR WOTUS (4.1.2)? ☐ YES ☒ NO

IF YES, A 15 FOOT NATURAL WATER QUALITY RIPARIAN BUFFER ZONE ADJACENT TO AND ON BOTH SIDES OF THE RECEIVING EPHEMERAL STREAM IDENTIFIED AS A WOTUS (EPHEMERAL) BY THE U.S. ARMY CORPS OF ENGINEERS (USACE) OR THE ENVIRONMENTAL PROTECTION AGENCY SHALL BE PRESERVED TO THE MAXIMUM EXTENT PRACTICABLE DURING CONSTRUCTION ACTIVITIES AT THE SITE.

IF YES, THEY HAVE BEEN INCLUDED ON PLAN SHEET(S) _____

4.2.2. ARE THERE ANY WATER QUALITY RIPARIAN BUFFER ZONES NOT REQUIRED FOR WOTUS (EPHEMERAL) DUE TO A USACE PERMIT?

☐ YES ☒ NO

4.3. OUTFALL INFORMATION

4.3.1. OUTFALL TABLE (3.5.1.e). SEE SWPPP SHEET S-8-11 FOR OUTFALL INFORMATION.

4.3.2. HAVE ALL OUTFALLS BEEN LABELED ON THE EPSC PLAN SHEETS (3.5.1.h)? ☒ YES ☐ NO

4.3.3. HAVE ALL OUTFALLS BEEN LABELED ON A USGS TOPOGRAPHIC MAP INCLUDED IN THE "DOCUMENTATION AND PERMITS" BINDER (2.6.2)? ☐YES ☐ NO

4.3.4. WHERE POSSIBLE, HAS NON-PROJECT RUN-ON BEEN DIVERTED AROUND OR THROUGH THE PROJECT TO ELIMINATE CONTACT WITH DISTURBED AREAS OF THE PROJECT AND SEPARATE IT FROM PROJECT RUN-OFF THEREBY REDUCING THE DRAINAGE AREA OF TO THE OUTFALLS IN THIS AREA?

☐ YES ☐ NO ☒ N/A

4.3.5. ARE EQUIVALENT MEASURES BEING SUBSTITUTED FOR A SEDIMENT BASIN(S)? ☐ YES ☐ NO ☒ N/A

4.3.6. A SEDIMENT BASIN OR EQUIVALENT MEASURE(S) WILL BE PROVIDED FOR ANY OUTFALL IN A DRAINAGE AREA:

OF TEN ACRES OR MORE FOR AN OUTFALL(S) THAT DOES NOT DISCHARGE TO A STATE STREAM WITH UNAVAILABLE PARAMETERS OR EXCEPTIONAL TENNESSEE WATERS. A TEMPORARY (OR PERMANENT) SEDIMENT BASIN OR EQUIVALENT CONTROL MEASURES THAT PROVIDES STORAGE FOR A CALCULATED VOLUME OF RUNOFF FROM A MINIMUM 2-YEAR/ 24-HOUR STORM EVENT, SHALL BE PROVIDED UNTIL FINAL STABILIZATION OF THE SITE. (3.5.3.3)

OR

OF FIVE ACRES OR MORE FOR AN OUTFALL(S) THAT DISCHARGES TO A STATE STREAM WITH UNAVAILABLE PARAMETERS OR EXCEPTIONAL TENNESSEE WATERS. A TEMPORARY (OR PERMANENT) SEDIMENT BASIN THAT PROVIDES STORAGE FOR A CALCULATED VOLUME OF RUNOFF FROM A 5-YEAR/ 24-HOUR STORM EVENT AND RUNOFF FROM EACH ACRE DRAINED, OR EQUIVALENT CONTROL MEASURES, SHALL BE PROVIDED UNTIL FINAL STABILIZATION OF THE SITE. (5.4.1.g).

IN BOTH INSTANCES, THE ENVIRONMENTAL AND ROADWAY DESIGN DIVISIONS MAY BE CONTACTED TO REVIEW AND CONCUR WITH ANY REVISION OF THE SWPPP BEFORE DISTURBANCE OF THE OUTFALL PROCEEDS.

4.4. WETLAND INFORMATION

WILL CONSTRUCTION AND/OR EROSION AND SEDIMENT CONTROLS IMPACT ANY WETLANDS? ☐ YES ☒ NO

IF YES, THE STRUCTURAL EPSC MEASURES HAVE BEEN INCLUDED IN THE TOTAL PROJECT IMPACTS AND IN THE WATER QUALITY PERMITS.

WETLAND INFORMATION				
TDOT WETLAND LABEL	FROM STATION LT OR RT	TO STATION LT OR RT	TEMPORARY IMPACTS (AC)	PERMANENT IMPACTS (AC)

4.5. TOTAL MAXIMUM DAILY LOADS (TMDL) INFORMATION (3.5.10)

4.5.1. IS THIS PROJECT LOCATED IN A HUC-8 WATERSHED THAT MAINTAINS AN EPA APPROVED TMDL FOR SILTATION AND HABITAT ALTERATION?

☐YES ☒ NO

4.5.2. IF YES, IS THIS PROJECT LOCATED WITHIN A HUC-12 SUBWATERSHED WITH A WASTE LOAD ALLOCATION (WLA)?

☐ YES ☐ NO

4.5.3. IF YES, DOES THE PROJECT HAVE A DIRECT DISCHARGE TO A 303(d) LISTED STREAM FOR SILTATION OR HABITAT ALTERATION?

☐ YES ☐ NO

4.5.4. IF YES, HAS A SUMMARY OF THE CONSULTATION LETTER BEEN SUBMITTED/RECEIVED?

☐ YES ☐ NO

4.6. ECOLOGY INFORMATION (3.5.5.e)

DOES THE ENVIRONMENTAL BOUNDARIES REPORT SPECIFY SPECIAL NOTES TO BE ADDED TO THE PLAN SHEETS?

☐ YES ☒ NO

IF YES, THEY HAVE BEEN INCLUDED ON PLAN SHEET(S) _____.

4.7. ENVIRONMENTAL COMMITMENTS

ARE THERE ANY NOTES ON THE ENVIRONMENTAL COMMITMENT SHEET?

☐ YES ☒ NO

IF YES, THEY HAVE BEEN INCLUDED ON PLAN SHEET(S) _____.

5. EROSION PREVENTION AND SEDIMENT CONTROL (EPSC) MEASURES (3.5.3)

5.1. EPSC MEASURES MUST BE DESIGNED, INSTALLED AND MAINTAINED TO CONTROL STORMWATER VOLUME AND VELOCITY WITHIN THE SITE TO MINIMIZE EROSION (4.1.1).

5.2. EPSC MEASURES MUST CONTROL STORMWATER DISCHARGES, INCLUDING BOTH PEAK FLOWS AND TOTAL STORMWATER VOLUME, TO MINIMIZE EROSION AT OUTLETS, STREAM CHANNELS, AND STREAM BANKS. (4.1.1)

5.3. HAVE THE CONTROL MEASURES BEEN DESIGNED PER THE SIZE AND SLOPE OF THE DISTURBED DRAINAGE AREA (3.5.3.3)?

☒YES ☐ NO

5.4. THE CONTROL MEASURES HAVE, AT A MINIMUM, BEEN DESIGNED FOR THE 5-YEAR, 24 HOUR STORM EVENT (3.5.3.3, 5.4.1.a).

5.5. ARE THE LIMITS OF DISTURBANCE CLEARLY MARKED ON THE EPSC PLANS (3.5.1.h)? ☒ YES ☐ NO

5.6. AREAS TO BE UNDISTURBED SHALL BE CLEARLY MARKED IN THE FIELD BEFORE CONSTRUCTION ACTIVITIES BEGIN.

5.7. UNLESS OTHERWISE NOTED IN THE PLANS, THE CONTRACTOR SHALL NOT CLEAR/DISTURB ANY AREA BEYOND 15 FEET FROM SLOPE LINES OR ROW/ EASEMENT LINE, WHICHEVER IS LESSER.

5.8. CLEARING, GRUBBING, AND OTHER DISTURBANCE TO RIPARIAN VEGETATION SHALL BE LIMITED TO THE MINIMUM NECESSARY FOR SLOPE CONSTRUCTION AND EQUIPMENT OPERATIONS. EXISTING VEGETATION,

VOID FOR BIDDING
FOR INFORMATION ONLY

HISTORIC FRANKLIN TENNESSEE

BRIAN A. RALSTIN REGISTERED ENGINEER AGRICULTURE COMMERCE No. 119683 STATE OF TENNESSEE 7/31/2020

CITY OF FRANKLIN
ENGINEERING DEPARTMENT

STORMWATER POLLUTION PREVENTION PLAN

INCLUDING STREAM AND WETLAND BUFFERS (UNLESS PERMITTED), SHOULD BE PRESERVED TO THE MAXIMUM EXTENT POSSIBLE. UNNECESSARY VEGETATION REMOVAL IS PROHIBITED.

5.9. HAVE STAGED EPSC PLANS BEEN PREPARED FOR THE PROJECT (3.5.2)?

YES ☒ NO ☐ (IF YES, CHECK ONE BELOW)

5.9.1. ☐ PROJECT DISTURBED AREA IS THAN LESS THAN 5 ACRES (MINIMUM OF TWO STAGES OF EPSC PLANS)

5.9.2. ☒ PROJECT DISTURBED AREA IS GREATER THAN 5 ACRES (MINIMUM OF THREE STAGES OF EPSC PLANS)

5.10. STEEP SLOPES ARE DEFINED AS A NATURAL OR CREATED SLOPE OF 35% GRADE OR GREATER REGARDLESS OF HEIGHT. HAVE STEEP SLOPES BEEN MINIMALLY DISTURBED AND/OR PROTECTED BY CONVEYING RUNOFF NON-EROSIVELY AROUND OR OVER THE SLOPE (3.5.3.2) (10. "STEEP SLOPE")? ☐ YES ☐ NO ☒ N/A

5.11. THE STRUCTURAL EPSC MEASURES HAVE BEEN INCLUDED IN THE TOTAL PROJECT IMPACTS AND HAVE BEEN INCLUDED IN THE AQUATIC RESOURCE ALTERATION (ARAP) PERMIT OR SECTION 401 CERTIFICATION (3.5.1.j). REFER TO THE LIST OF APPLICABLE ENVIRONMENTAL PERMITS LOCATED ON SWPPP SHEET S-7. ALL PERMITS WILL BE MAINTAINED ON SITE WITHIN THE "DOCUMENTATION AND PERMITS" BINDER.

5.12. THE EPSC CONTROL MEASURES LISTED IN THE QUANTITIES TABLE ON SHEET 14A HAVE BEEN SELECTED IN ACCORDANCE WITH TDOT STANDARD DRAWINGS AND GOOD ENGINEERING PRACTICES (3.5.3.1.b).

5.13. EPSC MEASURES SHALL BE INSTALLED PER TDOT STANDARDS (i.e. STANDARD DRAWINGS) AND SHALL BE FUNCTIONAL PRIOR TO ANY EARTH MOVING OPERATIONS.

5.14. EPSC MEASURES WILL NOT BE INSTALLED WITHIN A STREAM WITHOUT FIRST OBTAINING APPROVAL FROM THE PERMITS SECTION.

5.15. TEMPORARY EPSC MEASURES MAY BE REMOVED AT THE BEGINNING OF THE WORKDAY, BUT MUST BE REINSTALLED AT THE END OF THE WORKDAY OR BEFORE A PRECIPITATION EVENT.

5.16. EPSC MEASURES LOCATED IN WOTUS (EPHEMERAL STREAMS) MUST BE CONSIDERED TEMPORARY AND SHALL BE REMOVED AT THE END OF CONSTRUCTION.

5.17. THE CONTRACTOR SHALL ESTABLISH AND MAINTAIN A PROACTIVE METHOD TO PREVENT THE OFF-SITE MIGRATION OR DEPOSIT OF SEDIMENT OFF THE PROJECT LIMITS (E.G. R.O.W., EASEMENTS, ETC.), INTO WATERS OF THE STATE/U.S., OR ONTO ROADWAYS USED BY THE PUBLIC. IF SEDIMENT ESCAPES THE CONSTRUCTION SITE, OFF-SITE ACCUMULATIONS OF SEDIMENT THAT HAVE NOT REACHED A STREAM MUST BE REMOVED TO A LEVEL SUFFICIENT TO MINIMIZE OFF-SITE IMPACTS (E.G., FUGITIVE SEDIMENT THAT HAS ESCAPED THE CONSTRUCTION SITE AND HAS COLLECTED IN A STREET MUST BE REMOVED SO THAT IT IS NOT SUBSEQUENTLY WASHED INTO STORM SEWERS AND STREAMS BY THE NEXT RAIN AND/OR SO THAT IT DOES NOT POSE A SAFETY HAZARD TO USERS OF PUBLIC STREETS). ARRANGEMENTS CONCERNING REMOVAL OF SEDIMENT ON ADJOINING PROPERTY MUST BE SETTLED WITH THE ADJOINING PROPERTY OWNER BEFORE REMOVAL OF SEDIMENT. SEDIMENT THAT MIGRATES INTO WATERS OF THE STATE/US SHALL NOT BE REMOVED WITHOUT GUIDANCE FROM ENVIRONMENTAL PERSONNEL.

5.18. OFFSITE VEHICLE TRACKING OF SEDIMENTS AND THE GENERATION OF DUST SHALL BE MINIMIZED. A STABILIZED CONSTRUCTION EXIT (A POINT OF ENTRANCE/EXIT TO THE CONSTRUCTION PROJECT) SHALL BE PROVIDED TO REDUCE THE TRACKING OF MUD AND DIRT ONTO PUBLIC ROADS BY CONSTRUCTION VEHICLES.

5.19. THE QUANTITIES REQUIRED FOR STABILIZED CONSTRUCTION EXITS PER TDOT STANDARDS HAVE BEEN SPECIFIED ON SHEET 7 (3.5.3.1.n).

5.20. DISCHARGES FROM DEWATERING ACTIVITIES ARE PROHIBITED UNLESS MANAGED BY APPROPRIATE CONTROLS THAT PROVIDE THE LEVEL OF TREATMENT (FILTRATION) NECESSARY TO COMPLY WITH PERMIT REQUIREMENTS. (4.1.4).

5.21. SETTLING BASINS AND SEDIMENT TRAPS SHALL BE PROPERLY DESIGNED PER THE SIZE OF THE DRAINAGE AREAS OR VOLUME OF WATER TO BE TREATED. TREATED WATER MUST BE DISCHARGED THROUGH A PIPE OR WELL VEGETATED OR LINED CHANNEL, SO THAT THE DISCHARGE DOES NOT CAUSE EROSION OR SEDIMENT TRANSPORT.

5.22. DISCHARGES FROM SEDIMENT BASINS AND IMPOUNDMENTS SHALL UTILIZE OUTLET STRUCTURES THAT ONLY WITHDRAW WATER FROM NEAR THE SURFACE OF THE BASIN OR IMPOUNDMENT. TREATED WATER MUST BE DISCHARGED THROUGH A PIPE, WELL- VEGETATED AND/OR LINED CHANNEL, SO THAT THE DISCHARGE DOES NOT CAUSE EROSION OR SEDIMENT TRANSPORT. (4.1.7).

5.23. THE DEWATERING OF WORK AREAS, TRENCHES, FOUNDATIONS, EXCAVATIONS, ETC. THAT HAVE COLLECTED STORMWATER, WATER FROM VEHICLE WASH AREAS, OR GROUNDWATER SHALL BE EITHER HELD IN SETTLING BASINS OR TREATED BY FILTRATION AND/OR CHEMICAL TREATMENT PRIOR TO ITS DISCHARGE. ALL CHEMICAL TREATMENTS MUST BE APPLIED PER SECTION 6 FLOCCULANTS.

5.24. WATER DISCHARGED FROM DEWATERING ACTIVITIES SHALL NOT CAUSE AN OBJECTIONABLE COLOR CONTRAST WITHIN THE RECEIVING NATURAL RESOURCE. WATER MUST BE HELD WITHIN SETTLING BASINS UNTIL IT IS AT LEAST AS CLEAR AS THE RECEIVING WATERS.

5.25. DEWATERING STRUCTURES, SEDIMENT FILTER BAGS, SEDIMENT BASINS AND TRAPS SHALL NOT BE LOCATED CLOSER THAN 30 FEET (60 FEET DESIRABLE VEGETATIVE BUFFER) FOR WATERS WITH UNAVAILABLE PARAMETERS AND EXCEPTIONAL TENNESSEE WATERS AND 15 FEET (30 FEET DESIRABLE VEGETATIVE BUFFER) FOR ALL OTHER FEATURES FROM THE TOP BANK OF A STREAM, WOTUS (EPHEMERAL), WETLAND OR OTHER NATURAL RESOURCE AND SHALL BE PROPERLY DESIGNED PER THE SIZE OF THE DRAINAGE AREAS OR VOLUME OF WATER TO BE TREATED.

5.26. STABILIZATION PRACTICES: PRE-CONSTRUCTION VEGETATIVE COVER WILL NOT BE DESTROYED, REMOVED OR DISTURBED MORE THAN 14 DAYS PRIOR TO GRADING OR EARTH MOVING UNLESS THE AREA WILL BE SEEDED AND/OR MULCHED OR OTHER TEMPORARY COVER IS INSTALLED (3.5.3.1.h).

5.27. STABILIZATION MEASURES WILL BE INITIATED AS SOON AS POSSIBLE WHERE CONSTRUCTION ACTIVITIES HAVE TEMPORARILY OR PERMANENTLY CEASED. TEMPORARY OR PERMANENT STABILIZATION WILL BE COMPLETED WITHIN 14 DAYS AFTER ACTIVITY HAS TEMPORARILY OR PERMANENTLY CEASED IN THAT AREA. PERMANENT STABILIZATION WILL REPLACE TEMPORARY MEASURES AS SOON AS PRACTICABLE (3.5.3.2).

5.28. PRIORITY SHALL BE GIVEN TO FINISHING OPERATIONS AND PERMANENT EPSC MEASURES OVER TEMPORARY EPSC MEASURES ON ALL PROJECTS. UNPACKED GRAVEL CONTAINING FINES (SILT AND CLAY SIZED PARTICLES) OR CRUSHER-RUN WILL NOT BE CONSIDERED A NON-ERODIBLE SURFACE

5.29. DELAYING THE PLANTING OF COVER VEGETATION UNTIL WINTER MONTHS OR DRY MONTHS SHOULD BE AVOIDED, IF POSSIBLE.

5.30. A SOIL ANALYSIS SHALL BE PERFORMED PRIOR TO THE APPLICATION OF FERTILIZERS TO ANY PORTION OF THE STE. SOILS SHOULD BE ANALYZED FOR pH, BUFFER VALUE, PHOSPHOROUS, POTASSIUM, CALCIUM AND MAGNESIUM. SOIL SAMPLES SHOULD BE REPRESENTATIVE OF THE AREA FOR WHICH FERTILIZER WILL BE APPLIED. SAMPLE TYPE SHOULD BE COLLECTED AND ANALYZED IN ACCORDANCE WITH THE UT EXTENSION "SOIL TESTING" BROCHURE PB1061. (4.1.5.)

5.31. FERTILIZERS SHALL BE APPLIED ONLY IN THE AMOUNTS SPECIFIED FROM THE ANALYSES. ONCE APPLIED, FERTILIZERS SHALL BE WORKED INTO THE SOIL TO LIMIT THE EXPOSURE TO STORMWATER.

5.32. STEEP SLOPES SHALL BE TEMPORARILY STABILIZED NOT LATER THAN 7 DAYS AFTER CONSTRUCTION ACTIVITY ON THE SLOPE HAS TEMPORARILY OR PERMANENTLY CEASED. (3.5.3.2).

6. FLOCCULANTS (3.5.3.1.b)

IS ADDITIONAL PHYSICAL OR CHEMICAL TREATMENT OF STORMWATER RUNOFF NECESSARY (5.4.1.a)? ☐ YES ☒ NO

IF YES, THE FOLLOWING NOTES APPLY:

6.1. POLYACRYLAMIDES (PAM) SHALL BE OF THE ANIONIC OR NEUTRALLY CHARGED TYPE ONLY. PAM REQUIREMENTS ARE AS FOLLOWS:

6.1.1. CATIONIC PAM IS NOT ALLOWED BECAUSE OF ITS TOXICITY TO FISH AND AQUATIC LIFE.

6.1.2. ANIONIC AND NEUTRALLY CHARGED PAM SHALL MEET THE EPA AND FDA ACRYLAMIDE MONOMER LIMITS OF EQUAL TO OR LESS THAN 0.05% BY WEIGHT ACRYLAMIDE MONOMER.

6.1.3. ANIONIC AND NEUTRALLY CHARGED PAM SHALL HAVE A DENSITY OF 10% TO 55% BY WEIGHT AND A MOLECULAR WEIGHT OF 16 TO 24 MG/MOLES.

6.1.4. PAM MIXTURES SHALL BE NON-COMBUSTIBLE.

6.1.5. PAM SHALL CONTAIN ONLY MANUFACTURER-RECOMMENDED ADDITIVES.

6.2. ALL PHYSICAL AND/OR CHEMICAL TREATMENT WILL BE RESEARCHED, APPLIED IN ACCORDANCE WITH MANUFACTURE'S GUIDELINES AND FULLY DESCRIBED ON THE EPSC PLANS (3.5.3.1.b).

6.3. FLOCCULANTS SHALL BE HANDLED IN ACCORDANCE WITH ALL OCCUPATIONAL SAFETY AND HEALTH ADMINISTRATION (OSHA) MATERIAL SAFETY DATA SHEET (MSDS) REQUIREMENTS AND SHALL BE APPLIED IN ACCORDANCE WITH THE MANUFACTURER'S RECOMMENDATIONS FOR THE SPECIFIED USE CONFORMING TO ALL FEDERAL, STATE AND LOCAL LAWS, RULES AND REGULATIONS.

6.4. ALL VENDORS AND SUPPLIERS OF FLOCCULANTS SHALL PRESENT OR SUPPLY A WRITTEN TOXICITY REPORT FOR BOTH ACUTE AND CHRONIC TOXICITY TESTS WHICH VERIFIES THAT THE FLOCCULANT EXHIBITS ACCEPTABLE TOXICITY PARAMETERS WHICH MEET OR EXCEED THE EPA REQUIREMENTS FOR THE STATE AND FEDERAL WATER QUALITY STANDARDS. WHOLE EFFLUENT TESTING DOES NOT MEET THIS REQUIREMENT AS PRIMARY REACTIONS HAVE OCCURRED AND TOXIC POTENTIALS HAVE BEEN REDUCED.

6.5. DO NOT APPLY FLOCCULANTS DIRECTLY TO, OR WITHIN 60 FEET, OF ANY STREAMS, WETLANDS, OR OTHER NATURAL WATER RESOURCE LOCATED ON OR ADJACENT TO THE CONSTRUCTION SITE. DO NOT APPLY FLOCCULANTS DIRECTLY INTO WATERS CONTAINED WITHIN SEDIMENT PONDS OR TO SLOPES THAT PRODUCE RUNOFF DIRECTLY INTO A STREAM, WETLAND, OR OTHER NATURAL WATER RESOURCE. DO NOT APPLY FLOCCULANTS IMMEDIATELY AT A STORMWATER OUTFALL WHERE RUNOFF LEAVES THE PROJECT LIMITS.

6.6. BEFORE FLOCCULANTS CAN BE USED ON A CONSTRUCTION PROJECT, SITE-SPECIFIC SOIL SAMPLES MUST BE OBTAINED AND TESTED BY THE MANUFACTURER OR THEIR REPRESENTATIVE, TO IDENTIFY THE OPTIMUM FLOCCULANT TYPE AND APPLICATION RATE. SINCE FLOCCULANT EFFICACY IS HIGHLY DEPENDENT ON SOIL TYPE, SOIL SAMPLES WILL NEED TO BE OBTAINED FROM EACH SOIL HORIZON THAT WILL BE ACCESSED DURING EXCAVATION. FLOCCULANTS SHOULD BE APPLIED ON A CONSTRUCTION SITE IN ACCORDANCE WITH THE MANUFACTURER'S RECOMMENDED APPLICATION OR DOSAGE RATE. APPLICATION METHOD SHALL ENSURE UNIFORM COVERAGE TO THE TARGET AREA. DO NOT APPLY EMULSION FORMS OF FLOCCULANTS DIRECTLY TO STORMWATER RUNOFF OR TO STREAMS, WETLANDS, OR OTHER WATER RESOURCES DUE TO SURFACTANT TOXICITY.

6.7. FLOCCULANT POWDER MAY BE APPLIED BY A HAND SPREADER OR A MECHANICAL SPREADER. IF APPROVED BY THE MANUFACTURER, FLOCCULANT MAY BE MIXED WITH DRY SILICA SAND, FERTILIZER, SEED, OR OTHER SOIL AMENDMENTS TO AID IN SPREADING. FLOCCULANTS MAY ALSO BE APPLIED WITH A WATER TRUCK OR AS PART OF HYDRO-SEEDING. APPLICATION METHOD SHALL ENSURE UNIFORM COVERAGE TO THE TARGET AREA.

6.8. MANUFACTURER'S GUIDANCE SHOULD BE FOLLOWED FOR BLOCK, LOG AND SOCK SPACING CONFIGURATIONS. BEFORE FLOCCULANTS CAN BE USED ON A CONSTRUCTION PROJECT, SITE-SPECIFIC SOIL SAMPLES MUST BE OBTAINED AND TESTED BY THE MANUFACTURER OR THEIR REPRESENTATIVE, TO IDENTIFY THE OPTIMUM FLOCCULANT TYPE AND APPLICATION RATE. SINCE FLOCCULANT EFFICACY IS HIGHLY DEPENDENT ON SOIL TYPE, SOIL SAMPLES WILL NEED TO BE OBTAINED FROM EACH SOIL HORIZON THAT WILL BE ACCESSED DURING EXCAVATION. FLOCCULANTS SHOULD BE APPLIED ON A CONSTRUCTION SITE IN ACCORDANCE WITH THE MANUFACTURER'S RECOMMENDED APPLICATION OR DOSAGE RATE.

7. UTILITY RELOCATION

ARE UTILITIES INCLUDED IN THE CONTRACT? ☒ YES ☐ NO

IF YES, THE FOLLOWING APPLY:

7.1. STORMWATER WHICH COLLECTS IN THE UTILITY TRENCH SHALL BE PUMPED INTO A DEWATERING STRUCTURE OR SEDIMENT FILTER BAG AND TREATED PRIOR TO DISCHARGE.

7.2. SILT FENCE SHALL BE INSTALLED ON THE DOWNGRADIENT SIDE OF STOCKPILED SOIL. ANY TRENCHING ACROSS WET WEATHER CONVEYANCES SHALL BE DONE DURING DRY CONDITIONS, REMOVED AND STABILIZED BY THE END OF THE WORK DAY.

7.3. UTILITY CROSSINGS IN ENVIRONMENTAL FEATURES SHALL BE CONSTRUCTED IN ACCORDANCE WITH TDOT STANDARDS AND NO WORK SHALL BE CONDUCTED IN FLOWING WATERS. ENVIRONMENTAL PERMITS APPLY TO UTILITIES IN THIS PROJECT. THE STATE CONTRACTOR SHALL COMPLY WITH ALL REQUIREMENTS OF THE PERMITS.

7.4. IT IS THE RESPONSIBILITY OF THE STATE UTILITY CONTRACTOR TO PROTECT EXPOSED EARTH FROM EROSION AND TO PROVIDE FOR

HISTORIC FRANKLIN TENNESSEE

BRIAN A. RALSTIN
REGISTERED ENGINEER
AGRICULTURE COMMERCE
No. 119683
STATE OF TENNESSEE
7/31/2020

CITY OF FRANKLIN
ENGINEERING DEPARTMENT

STORMWATER POLLUTION PREVENTION PLAN

VOID FOR BIDDING OR CONSTRUCTION
FOR INFORMATION ONLY

CONTAINMENT OF SEDIMENT THAT MAY RESULT FROM THEIR WORK. PRIOR TO BEGINNING WORK, ADEQUATE EPSC MEASURES MUST BE IN PLACE TO TRAP ANY SEDIMENT THAT MAY TRAVEL OFF-SITE IN THE EVENT OF RAIN. DURING THE PROGRESSION OF THEIR WORK, EXPOSED EARTH AREAS SHALL BE STABILIZED AS SOON AS POSSIBLE TO PREVENT EROSION. AT NO TIME, SHALL EXPOSED EARTH RESULTING FROM THEIR OPERATIONS HAVE UNPROTECTED ACCESS TO FLOWING OFF-SITE AND ENTERING WATERS OF THE STATE/U.S.

7.5. FOR THE INSTALLATION OF BURIED UTILITIES (PIPES AND CABLES), TRENCHES SHALL BE BACKFILLED DAILY AS CONSTRUCTION PROCEEDS. BACKFILLED TRENCHES SHALL BE SEEDED AND MULCHED OR SODDED DAILY IF POSSIBLE, BUT NO LATER THAN FOURTEEN DAYS AFTER BEING BACKFILLED. ANY TEMPORARY SPOILS OF EXCAVATED EARTH SHALL BE LOCATED WITHIN PROPOSED EPSC MEASURES OR RECEIVE SEPARATE EPSC MEASURES. IF TRENCHES ARE NOT BACKFILLED OVERNIGHT, APPROPRIATE EPSC MEASURES WILL BE INSTALLED BY THE STATE UTILITY CONTRACTOR UNTIL THE TRENCH IS BACKFILLED.

7.6. IN REGARDS TO EPSC, TDEC REGULATIONS APPLY TO THE STATE UTILITY CONTRACTORS ON THIS PROJECT. THE STATE CONTRACTOR IS RESPONSIBLE FOR EPSC MEASURES RELATED TO UTILITY CONSTRUCTION INCLUDED IN THE STATE CONTRACT.

7.7. TRENCHES FORMED FOR THE INSTALLATION OF BURIED UTILITIES MAY CAUSE STORMWATER RUNOFF TO CONCENTRATE AT THE TRENCH LINE. ADDITIONAL EPSC MEASURES MAY BE REQUIRED TO BE INSTALLED AS APPROVED BY THE PROJECT ENGINEER.

7.8. FOR THE INSTALLATION OF UNDERGROUND UTILITIES OUTSIDE OF THE CITY RIGHT-OF-WAY, EPSC MEASURES SHALL BE INSTALLED PRIOR TO CLEARING (TRENCHING AND ASSOCIATED BLASTING) IN THOSE AREAS NECESSARY TO PREVENT SEDIMENT FROM LEAVING THE CONSTRUCTION AREA. THESE EPSC MEASURES SHALL REMAIN UNTIL THE BACKFILLED TRENCH IS STABILIZED WITH FINAL VEGETATIVE COVER.

7.9. THE UTILITY CONTRACTOR SHALL RESTORE ALL AFFECTED WET WEATHER CONVEYANCES TO THE EXISTING TOPOGRAPHIC CONDITIONS AS APPROVED BY THE CITY'S RESPONSIBLE PARTY.

7.10. THE UTILITY CONTRACTOR WILL PROVIDE APPROPRIATE EPSC MEASURES TO REPLACE ONSITE EPSC MEASURES REMOVED TO FACILITATE THE INSTALLATION OF UTILITIES. REPLACEMENT OF EPSC MEASURES WILL BE COORDINATED WITH THE ENGINEER BEFORE COMMENCING WORK.

7.11. FOR UTILITY CROSSINGS THAT UTILIZE HORIZONTAL DIRECTIONAL DRILLING THE FOLLOWING SHALL APPLY:

7.11.1. THE ENTRY AND EXIT POINTS SHALL BE AT LEAST 50 FEET FROM THE STREAM BANK OR WETLAND BOUNDARY.

7.11.2. THE DEPTH OF BORE BELOW THE STREAMBED IS SUFFICIENT TO PREVENT RELEASE OF DRILLING FLUID, BASED ON THE PARENT MATERIAL.

7.11.3. A SITE-SPECIFIC CONTINGENCY AND CONTAINMENT PLAN FOR INADVERTENT RELEASE OF DRILLING FLUID SHALL BE ESTABLISHED PRIOR TO COMMENCEMENT OF WORK. THIS PLAN SHALL BE SUBMITTED TO THE PROJECT ENGINEER AND THE CITY'S ENVIRONMENTAL GROUP PERMITS AND/OR COMPLIANCE AND FIELD SERVICES OFFICE FOR REVIEW AND APPROVAL.

8. MAINTENANCE AND INSPECTION

8.1. INSPECTION PRACTICES (3.5.8)

8.1.1. PROJECT EPSC INSPECTORS AND ENGINEERS (INCLUDING CITY STAFF, CONSULTANTS AND CONTRACTOR STAFF) RESPONSIBLE FOR THE INSPECTION, IMPLEMENTATION, MAINTENANCE, AND/OR REPAIR OF EPSC MEASURES SHALL MEET ONE OF THE FOLLOWING REQUIREMENTS (3.5.8.1.):

8.1.1.1. SUCCESSFULLY COMPLETED THE TDOT EPSC INSPECTIONS TRAINING AND ANY RECERTIFICATION COURSE AS REQUIRED.

8.1.1.2. SUCCESSFULLY COMPLETED THE TDEC "LEVEL I - FUNDAMENTALS OF EROSION PREVENTION AND SEDIMENT CONTROL" COURSE AND ANY RECERTIFICATION COURSES AS REQUIRED.

8.1.1.3. BE A CURRENT TN LICENSED PROFESSIONAL ENGINEER OR LANDSCAPE ARCHITECT.

8.1.1.4. BE A CURRENT CERTIFIED PROFESSIONAL IN EROSION AND SEDIMENT CONTROL (CPESC).

8.1.1.5. SUCCESSFULLY COMPLETED TDEC "LEVEL II – DESIGN PRINCIPLES FOR EROSION PREVENTION AND SEDIMENT CONTROL FOR CONSTRUCTION SITES" COURSE AND ANY RECERTIFICATION COURSE AS REQUIRED.

8.1.2. THE CONSTRUCTION ENGINEER (OR THEIR DULY AUTHORIZED REPRESENTATIVE) AND THE CONTRACTOR'S SITE SUPERINTENDENT ARE RESPONSIBLE FOR INSPECTIONS, MAINTENANCE AND REPAIR ACTIVITIES ARE THE RESPONSIBILITY OF THE CONTRACTOR. THE CONSTRUCTION ENGINEER OR THEIR DULY AUTHORIZED REPRESENTATIVE SHALL COMPLETE THE EPSC INSPECTION REPORTS AND DISTRIBUTE COPIES PER THE CONTRACT.

8.1.3. THE INSPECTOR SHALL CONDUCT PRE-CONSTRUCTION INSPECTIONS TO VERIFY AREAS THAT ARE NOT TO BE DISTURBED HAVE BEEN MARKED IN THE SWPPP AND IN THE FIELD BEFORE LAND DISTURBANCE ACTIVITIES BEGIN AND INITIAL MEASURES HAVE BEEN INSTALLED (10 "INSPECTOR") (3.5.1.o).

8.1.4. EPSC CONTROLS SHALL BE INSPECTED TO VERIFY MEASURES HAVE BEEN INSTALLED AND MAINTAINED IN ACCORDANCE WITH TDOT STANDARD DRAWINGS, SPECIFICATIONS, AND GOOD ENGINEERING PRACTICES. EPSC INSPECTIONS SHALL BE DOCUMENTED ON THE TDOT EPSC INSPECTION REPORT FORM AND THE TDEC CONSTRUCTION STORMWATER INSPECTION CERTIFICATION (TWICE-WEEKLY INSPECTIONS) FORM.

8.1.5. OUTFALL POINTS SHALL BE INSPECTED TO ASCERTAIN WHETHER EPSC MEASURES ARE EFFECTIVE IN PREVENTING EROSION AND CONTROLLING SEDIMENT INCLUDING SIGNIFICANT IMPACTS TO SURROUNDING STATE WATERS, WOTUS (EPHEMERAL), WETLANDS, OTHER NATURAL RESOURCES, AND ADJACENT PROPERTY OWNERS. WHERE DISCHARGE LOCATIONS ARE INACCESSIBLE, NEARBY DOWN GRADIENT LOCATIONS SHALL BE INSPECTED. LOCATIONS WHERE VEHICLES ENTER AND EXIT THE SITE SHALL BE INSPECTED FOR EVIDENCE OF OFF-SITE ROADWAY SEDIMENT TRACKING.

8.1.6. INSPECTIONS WILL BE CONDUCTED AT LEAST TWICE EVERY CALENDAR WEEK AND AT LEAST 72 HOURS APART (3.5.8.2.a). A CALENDAR WEEK IS DEFINED AS SUNDAY THROUGH SATURDAY. QUALITY ASSURANCE INSPECTIONS OF TDOT EPSC, NPDES AND WATER QUALITY PERMIT REQUIREMENTS SHALL BE PERFORMED PER THE CITY'S ENVIRONMENTAL GROUP COMPLIANCE AND FIELD SERVICES OFFICE.

8.1.7. THE FREQUENCY OF EPSC INSPECTIONS MAY BE REDUCED TO ONCE A MONTH WHERE SITES OR PORTIONS OF SITES HAVE BEEN TEMPORARILY STABILIZED UNTIL CONSTRUCTION ACTIVITIES RESUME WITH WRITTEN NOTIFICATION BY THE CITY ENGINEER TO TDEC NASHVILLE CENTRAL OFFICE AND SUBSEQUENT TDEC APPROVAL. WRITTEN NOTIFICATION MUST INCLUDE THE INTENT TO CHANGE FREQUENCY AND JUSTIFICATION (3.5.8.2.a).

8.1.8. ALL DISTURBED AREAS OF THE SITE THAT HAVE NOT BEEN FINALLY STABILIZED, AREAS USED FOR MATERIAL STORAGE THAT ARE EXPOSED TO PRECIPITATION, STRUCTURAL CONTROL MEASURES, AND LOCATIONS WHERE VEHICLES ENTER OR EXIT THE SITE, AND EACH OUTFALL WILL BE INSPECTED (3.5.8.2.b).

8.1.9. THE INSPECTOR WILL OVERSEE THE REQUIREMENTS OF OTHER CONSTRUCTION-RELATED WATER QUALITY PERMITS (I.E. TDEC ARAP, USACE SECTION 404, AND TVA SECTION 26a PERMITS) FOR CONSTRUCTION ACTIVITIES AROUND WATERS OF THE STATE (10 "INSPECTOR").

8.1.10. THE SWPPP WILL BE REVISED AS NECESSARY BASED ON THE RESULTS OF THE INSPECTION. REVISION(S) WILL BE RECORDED WITHIN 7 DAYS OF THE INSPECTION. REVISION(S) WILL BE IMPLEMENTED WITHIN 14 DAYS OF THE INSPECTION (3.5.8.2.e AND 3.5.8.2.f).

8.1.11. DOCUMENTATION OF INSPECTIONS WILL BE MAINTAINED ON SITE IN THE "DOCUMENTATION AND PERMITS" BINDER. REPORTS WILL BE SUBMITTED TO THE PROJECT ENGINEER PER THE CONTRACT.

8.1.12. THESE INSPECTION REQUIREMENTS DO NOT APPLY TO DEFINABLE AREAS OF THE SITE THAT HAVE MET FINAL STABILIZATION REQUIREMENTS AND HAVE BEEN NOTED IN THE SWPPP.

8.1.13. TRAINED CERTIFIED INSPECTORS SHALL COMPLETE INSPECTION TO THE BEST OF THEIR ABILITY. FALSIFYING INSPECTION RECORDS OR OTHER DOCUMENTATION OR FAILURE TO COMPLETE INSPECTION DOCUMENTATION SHALL RESULT IN A VIOLATION OF THIS PERMIT AND ANY OTHER APPLICABLE ACTS OR RULES (3.5.8.2.h).

8.2. DULY AUTHORIZED REPRESENTATIVE (7.7.3)

THE PROJECT ENGINEER MAY DELEGATE AN INDIVIDUAL AND/OR CONSULTANT TO SIGN EPSC INSPECTIONS REPORTS. FOR SATISFYING SIGNATORY REQUIREMENTS FOR EPSC INSPECTION REPORTS, THE PROJECT ENGINEER AND NEWLY AUTHORIZED INDIVIDUAL ACCEPTING RESPONSIBILITY MUST COMPLETE AND SIGN THE EPSC DELEGATION OF AUTHORITY.

8.3. MAINTENANCE PRACTICES (3.5.3.1 AND 3.5.7)

8.3.1. ALL CONTROLS WILL BE MAINTAINED IN GOOD AND EFFECTIVE OPERATING ORDER AND IN ACCORDANCE WITH TDOT STANDARD DRAWINGS AND GOOD ENGINEERING PRACTICES. (3.5.3.1.b)

8.3.2. MAINTENANCE AND REPAIR ACTIVITIES ARE THE RESPONSIBILITY OF THE CONTRACTOR.

8.3.3. UPON CONCLUSION OF THE INSPECTIONS, EPSC MEASURES FOUND TO BE INEFFECTIVE SHALL BE REPAIRED, REPLACED, OR MODIFIED BEFORE THE NEXT RAIN EVENT, IF POSSIBLE, BUT IN NO CASE, MORE THAN 24 HOURS AFTER THE INSPECTION OR WHEN THE CONDITION IS IDENTIFIED. IF THE REPAIR, REPLACEMENT OR MODIFICATION IS NOT PRACTICAL WITHIN THE 24-HOUR TIMEFRAME, WRITTEN DOCUMENTATION PROVIDED BY THE CONTRACTOR SHALL BE PLACED IN THE FIELD DIARY AND EPSC INSPECTION REPORT. AN ESTIMATED REPAIR, REPLACEMENT OR MODIFICATION SCHEDULE SHALL BE DOCUMENTED WITHIN 24 HOURS AFTER IDENTIFICATION. (3.5.8.2.e).

8.3.4. SEDIMENT SHALL BE REMOVED FROM SEDIMENT CONTROL STRUCTURES (SEDIMENT TRAPS, SILT FENCE, SEDIMENT BASINS, OTHER CONTROLS, ETC.) WHEN THE DESIGN CAPACITY HAS BEEN REDUCED BY FIFTY PERCENT (50%). (3.5.3.1.e).

8.3.5. DURING SEDIMENT REMOVAL, THE CONTRACTOR SHALL TAKE STEPS TO ENSURE THAT STRUCTURAL COMPONENTS OF EPSC MEASURES ARE NOT DAMAGED AND THUS MADE INEFFECTIVE. IF DAMAGE DOES OCCUR, THE CONTRACTOR SHALL REPAIR THE EPSC MEASURES AT THE CONTRACTOR'S OWN EXPENSE.

8.3.6. CHECK DAMS WILL BE INSPECTED FOR STABILITY. SEDIMENT WILL BE REMOVED WHEN DEPTH REACHES ONE-HALF (½) THE HEIGHT OF THE DAM.

8.3.7. SEDIMENT REMOVED FROM SEDIMENT CONTROL STRUCTURES SHALL BE PLACED AND TREATED IN A MANNER SO THAT THE SEDIMENT IS CONTAINED WITHIN THE PROJECT LIMITS, DOES NOT MIGRATE INTO FEATURES REMOVED FROM, AND DOES NOT MIGRATE ONTO ADJACENT PROPERTIES AND/OR INTO WATERS OF THE STATE/U.S.

8.3.8. LITTER, CONSTRUCTION DEBRIS, AND CONSTRUCTION CHEMICALS EXPOSED TO STORMWATER WILL BE PICKED UP AND REMOVED FROM STORMWATER EXPOSURE PRIOR TO ANTICIPATED STORM EVENTS OR BEFORE BEING CARRIED OFF THE SITE BY WIND, OR OTHERWISE PREVENTED FROM BECOMING A POLLUTANT SOURCE FOR STORMWATER DISCHARGES. AFTER USE, MATERIALS USED FOR EROSION CONTROL WILL BE REMOVED (3.5.3.1.f).

8.3.9. ALL SEEDED AREAS WILL BE CHECKED FOR BARE SPOTS, EROSION WASHOUTS, AND VIGOROUS GROWTH FREE OF SIGNIFICANT WEED INFESTATIONS.

9. SITE ASSESSMENTS (3.1.2)

QUALITY ASSURANCE SITE ASSESSMENTS OF EROSION PREVENTION AND SEDIMENT CONTROLS SHALL BE PERFORMED PER THE CITY'S ENVIRONMENTAL GROUP COMPLIANCE AND FIELD SERVICES OFFICE GUIDELINES.

10. STORMWATER MANAGEMENT (3.5.4)

10.1. STORMWATER MANAGEMENT WILL BE HANDLED BY TEMPORARY CONTROLS OUTLINED IN THIS SWPPP AND ANY PERMANENT CONTROLS NEEDED TO MEET PERMANENT STORMWATER MANAGEMENT NEEDS IN THE POST CONSTRUCTION PERIOD. PERMANENT CONTROLS WILL BE DEPICTED ON THE PLANS AND NOTED AS PERMANENT.

10.2. DESCRIBE ANY SPECIFIC POST-CONSTRUCTION MEASURES THAT WILL CONTROL VELOCITY, POLLUTANTS, AND/OR EROSION (3.5.4): RIPRAP OUTLET PROTECTION

VOID FOR BIDDING
FOR INFORMATION ONLY

HISTORIC FRANKLIN TENNESSEE

BRIAN A. RALSTIN REGISTERED ENGINEER No. 119683 STATE OF TENNESSEE 7/31/2020

CITY OF FRANKLIN
ENGINEERING DEPARTMENT

STORMWATER POLLUTION PREVENTION PLAN

TYPE	YEAR	PROJECT NO.	SHEET NO.
			S-5

10.3. OTHER ITEMS NEEDING CONTROL (3.5.5)

CONSTRUCTION MATERIALS: THE FOLLOWING MATERIALS OR SUBSTANCES ARE EXPECTED TO BE PRESENT ON THE SITE DURING THE CONSTRUCTION PERIOD. (CHECK ALL THAT APPLY).

☒ LUMBER, GUARDRAIL, TRAFFIC CONTROL DEVICES
☒ CONCRETE WASHOUT
☒ PIPE CULVERTS (I.E. CONCRETE, CORRUGATED METAL, HDPE, ETC.)
☒ MINERAL AGGREGATES, ASPHALT
☒ EARTH
☒ LIQUID TRAFFIC STRIPING MATERIALS, PAINT
☒ ROCK
☒ CURING COMPOUND
☐ EXPLOSIVES
☐ OTHER _____

THESE MATERIALS WILL BE HANDLED AS NOTED IN THIS SWPPP.

10.4. WASTE MATERIALS (3.5.5.b)

WASTE MATERIAL (EARTH, ROCK, ASPHALT, CONCRETE, ETC.) NOT REQUIRED FOR THE CONSTRUCTION OF THE PROJECT WILL BE DISPOSED OF BY THE CONTRACTOR IN ACCORDANCE WITH THE CONSTRUCTION CONTRACT AND FEDERAL AND STATE REGULATIONS. IMPACTS TO WATERS OF THE STATE/U.S. SHALL BE AVOIDED IF POSSIBLE. IF UNAVOIDABLE, THE CONTRACTOR WILL OBTAIN ALL NECESSARY PERMITS INCLUDING, BUT NOT LIMITED TO NPDES, AQUATIC RESOURCES ALTERATION PERMIT(S) CORPS OF ENGINEERS SECTION 404 PERMITS, AND TVA SECTION 26A PERMITS TO DISPOSE OF WASTE MATERIALS.

10.5. HAZARDOUS WASTE (3.5.5.c) (7.9)

ALL HAZARDOUS WASTE MATERIALS WILL BE DISPOSED OF IN A MANNER WHICH IS COMPLIANT WITH LOCAL OR STATE REGULATIONS. SITE PERSONNEL WILL BE INSTRUCTED IN THESE PRACTICES, AND THE INDIVIDUAL DESIGNATED AS THE CONTRACTOR'S ON-SITE REPRESENTATIVE WILL BE RESPONSIBLE FOR SEEING THAT THESE PRACTICES ARE FOLLOWED. THE CONTRACTOR WILL OBTAIN ALL NECESSARY PERMITS TO DISPOSE OF HAZARDOUS MATERIAL.

10.6. SANITARY WASTE (3.5.5.b)

PORTABLE SANITARY FACILITIES WILL BE PROVIDED ON ALL CONSTRUCTION SITES. SANITARY WASTE WILL BE COLLECTED FROM THE PORTABLE UNITS IN A TIMELY MANNER BY A LICENSED WASTE MANAGEMENT CONTRACTOR OR AS REQUIRED BY ANY LOCAL REGULATIONS. THE CONTRACTOR WILL OBTAIN ALL NECESSARY PERMITS TO DISPOSE OF SANITARY WASTE.

10.7. OTHER MATERIALS

THE FOLLOWING MATERIALS OR SUBSTANCES ARE EXPECTED TO BE PRESENT ON THE SITE DURING THE CONSTRUCTION PERIOD. (CHECK ALL THAT APPLY).

☒ FERTILIZERS AND LIME
☐ PESTICIDES AND/OR HERBICIDES
☒ DIESEL AND GASOLINE
☒ MACHINERY LUBRICANTS (OIL AND GREASE)

THESE MATERIALS WILL BE HANDLED AS NOTED IN THIS SWPPP.

11. NON-STORMWATER DISCHARGES (3.5.9)

11.1. THE FOLLOWING NON-STORMWATER DISCHARGES ARE ANTICIPATED DURING THE CONSTRUCTION OF THIS PROJECT (CHECK ALL THAT APPLY):

☒ DEWATERING OF WORK AREAS OF COLLECTED STORMWATER AND GROUND WATER.
☐ WATERS USED TO WASH VEHICLES (OF DUST AND SOIL) WHERE DETERGENTS ARE NOT USED AND DETENTION AND/OR FILTERING IS PROVIDED BEFORE THE WATER LEAVES THE SITE.
☒ WATER USED TO CONTROL DUST. (3.5.3.1.n)
☒ POTABLE WATER SOURCES INCLUDING WATERLINE FLUSHING FROM WHICH CHLORINE HAS BEEN REMOVED TO THE MAXIMUM EXTENT PRACTICABLE.
☐ UNCONTAMINATED GROUNDWATER OR SPRING WATER.
☒ FOUNDATION OR FOOTING DRAINS WHERE FLOWS ARE NOT CONTAMINATED WITH POLLUTANTS.
☐ OTHER: _____

11.2. ALL ALLOWABLE NON-STORMWATER DISCHARGES WILL BE DIRECTED TO STABLE DISCHARGE STRUCTURES PRIOR TO LEAVING THE SITE. FILTERING OR CHEMICAL TREATMENT MAY BE NECESSARY PRIOR TO DISCHARGE. ALL CHEMICAL TREATMENTS MUST BE APPLIED PER SECTION 6 FLOCCULANTS.

11.3. THE DESIGN OF ALL IMPACTED EPSC MEASURES RECEIVING FLOW FROM ALLOWABLE NON-STORMWATER DISCHARGES MUST BE DESIGNED TO HANDLE THE VOLUME OF THE NON-STORMWATER COMPONENT.

11.4. WASH DOWN OR WASTE DISCHARGE OF CONCRETE TRUCKS WILL NOT BE PERMITTED ON-SITE UNLESS PROPER SETTLEMENT AREAS HAVE BEEN PROVIDED IN ACCORDANCE WITH BOTH STATE AND FEDERAL REGULATIONS.

11.5. ARE ANY DISCHARGES ASSOCIATED WITH INDUSTRIAL (NON-CONSTRUCTION STORMWATER) ACTIVITY EXPECTED (3.5.1.i)?

☐ YES ☒ NO

IF YES, SPECIFY THE LOCATION OF THE ACTIVITY AND ITS PERMIT NUMBER: _____

12. SPILL PREVENTION, MANAGEMENT AND NOTIFICATION (3.5.5.c, 5.1)

12.1. SPILL PREVENTION (3.5.5.c)

12.1.1. CONTRACTOR'S BULK FUEL AND PETROLEUM PRODUCTS STORED ON-SITE OR ADJACENT TO THE R.O.W. IN ABOVE GROUND STORAGE TANKS WITH AGGREGATE STORAGE CAPACITY IN EXCESS OF 1,320 GALLONS SHALL HAVE SECONDARY CONTAINMENT.

12.1.2. THE CONTRACTOR SHALL BE RESPONSIBLE FOR PREPARING A SPILL PREVENTION CONTROL AND COUNTERMEASURE (SPCC) PLAN AS REQUIRED BY TDOT SPECIAL PROVISION 107FP (REGARDING WATER QUALITY AND STORM WATER PERMITS) AND THE LAW.

12.1.3. THE CONTRACTOR SHALL BE SOLELY RESPONSIBLE FOR OBTAINING ANY NECESSARY LOCAL, STATE, AND FEDERAL PERMITS. THE SPCC PLAN AND/OR PERMITS SHALL BE KEPT ON-SITE AND A COPY PROVIDED TO THE CONSTRUCTION ENGINEER.

12.2. MATERIAL MANAGEMENT

12.2.1. HOUSEKEEPING

ONLY NEEDED PRODUCTS WILL BE STORED ON-SITE BY THE CONTRACTOR. EXCEPT FOR BULK MATERIALS THE CONTRACTOR WILL STORE ALL MATERIALS UNDER COVER AND IN APPROPRIATE CONTAINERS. PRODUCTS MUST BE STORED IN ORIGINAL CONTAINERS AND LABELED. MATERIAL MIXING WILL BE CONDUCTED IN ACCORDANCE WITH THE MANUFACTURER'S RECOMMENDATIONS. WHEN POSSIBLE, ALL PRODUCTS WILL BE USED COMPLETELY BEFORE PROPERLY DISPOSING OF THE CONTAINER OFF SITE. THE MANUFACTURER'S DIRECTIONS FOR DISPOSAL OF MATERIALS AND CONTAINERS WILL BE FOLLOWED. THE CONTRACTOR'S SITE SUPERINTENDENT WILL INSPECT MATERIALS STORAGE AREAS REGULARLY TO ENSURE PROPER USE AND DISPOSAL. DUST GENERATED WILL BE CONTROLLED IN AN ENVIRONMENTALLY SAFE MANNER. VEGETATION AREAS NOT ESSENTIAL TO THE CONSTRUCTION PROJECT WILL BE PRESERVED AND MAINTAINED AS NOTED ON THE PLANS.

12.2.2. HAZARDOUS MATERIALS

PRODUCTS WILL BE KEPT IN ORIGINAL CONTAINERS UNLESS THE CONTAINER IS NOT RE-SEALABLE. ORIGINAL LABELS AND MATERIAL SAFETY DATA SHEETS WILL BE RETAINED IN A SAFE PLACE TO RELAY IMPORTANT PRODUCT INFORMATION. IF SURPLUS PRODUCT MUST BE DISPOSED OF, MANUFACTURER'S LABEL DIRECTIONS FOR DISPOSAL WILL BE FOLLOWED. MAINTENANCE AND REPAIR OF ALL EQUIPMENT AND VEHICLES INVOLVING OIL CHANGES, HYDRAULIC SYSTEM DRAIN DOWN, DE-GREASING OPERATIONS, FUEL TANK DRAIN DOWN AND REMOVAL, AND OTHER ACTIVITIES WHICH MAY RESULT IN THE ACCIDENTAL RELEASE OF CONTAMINANTS WILL BE CONDUCTED ON AN IMPERVIOUS SURFACE AND UNDER COVER DURING WET WEATHER TO PREVENT THE RELEASE OF CONTAMINANTS ONTO THE GROUND. WHEEL WASH WATER WILL BE COLLECTED AND ALLOWED TO SETTLE OUT SUSPENDED SOLIDS PRIOR TO DISCHARGE. WHEEL WASH WATER WILL NOT BE DISCHARGED DIRECTLY INTO ANY STORMWATER SYSTEM OR STORMWATER TREATMENT SYSTEM. POTENTIAL pH-MODIFYING MATERIALS SUCH AS: BULK CEMENT, CEMENT KILN DUST, FLY ASH, NEW CONCRETE WASHINGS AND CURING WATERS, CONCRETE PUMPING, AND MIXER WASHOUT WATERS WILL BE COLLECTED ON SITE AND MANAGED TO PREVENT CONTAMINATION OF STORMWATER RUNOFF.

12.3. PRODUCT SPECIFIC PRACTICES

12.3.1. PETROLEUM PRODUCTS: ALL ON-SITE VEHICLES WILL BE MONITORED FOR LEAKS AND RECEIVE REGULAR PREVENTIVE MAINTENANCE TO REDUCE THE CHANCE OF LEAKAGE. PETROLEUM PRODUCTS WILL BE STORED IN TIGHTLY SEALED CONTAINERS WHICH ARE CLEARLY LABELED.

12.3.2. FERTILIZERS: FERTILIZERS WILL BE APPLIED ONLY IN THE AMOUNTS SPECIFIED BY THE SOIL ANALYSIS. ONCE APPLIED, FERTILIZERS WILL BE WORKED INTO THE SOIL TO LIMIT THE EXPOSURE TO STORMWATER. FERTILIZERS WILL BE STORED IN AN ENCLOSED AREA UNDER COVER. THE CONTENTS OF PARTIALLY USED FERTILIZER BAGS WILL BE TRANSFERRED TO SEALABLE CONTAINERS TO AVOID SPILLS.

12.3.3. PAINTS: ALL CONTAINERS WILL BE TIGHTLY SEALED AND STORED WHEN NOT REQUIRED FOR USE. THE EXCESS WILL BE DISPOSED OF PER THE MANUFACTURER'S INSTRUCTIONS AND APPLICABLE STATE AND LOCAL REGULATIONS.

12.3.4. CONCRETE TRUCKS: CONTRACTORS WILL PROVIDE DESIGNATED TRUCK WASHOUT AREAS ON THE SITE. THESE AREAS MUST BE SELF CONTAINED AND NOT CONNECTED TO ANY STORMWATER OUTLET OF THE SITE. UPON COMPLETION OF CONSTRUCTION WASHOUT AREAS WILL BE PROPERLY STABILIZED.

12.4. SPILL MANAGEMENT

IN ADDITION TO THE PREVIOUS HOUSEKEEPING AND MANAGEMENT PRACTICES, THE FOLLOWING PRACTICES WILL BE FOLLOWED FOR SPILL PREVENTION AND CLEANUP IF NECESSARY:

12.4.1. FOR ALL HAZARDOUS MATERIALS STORED ON SITE, THE MANUFACTURER'S RECOMMENDED METHODS FOR SPILL CLEAN UP WILL BE CLEARLY POSTED. SITE PERSONNEL WILL BE MADE AWARE OF THE PROCEDURES AND THE LOCATIONS OF THE INFORMATION AND CLEANUP SUPPLIES.

12.4.2. APPROPRIATE CLEANUP MATERIALS AND EQUIPMENT WILL BE MAINTAINED BY THE CONTRACTOR IN THE MATERIALS STORAGE AREA ON-SITE AND UNDER COVER. AS APPROPRIATE, EQUIPMENT AND MATERIALS MAY INCLUDE ITEMS SUCH AS BOOMS, DUST PANS, MOPS, RAGS, GLOVES, GOGGLES, KITTY LITTER, SAND, SAWDUST, AND PLASTIC AND METAL TRASH CONTAINERS SPECIFICALLY FOR CLEAN UP PURPOSES.

12.4.3. ALL SPILLS WILL BE CLEANED IMMEDIATELY AFTER DISCOVERY AND THE MATERIALS DISPOSED OF PROPERLY. THE SPILL AREA WILL BE KEPT WELL VENTILATED AND PERSONNEL WILL WEAR APPROPRIATE PROTECTIVE CLOTHING TO PREVENT INJURY FROM CONTACT WITH A HAZARDOUS SUBSTANCE.

12.4.4. THE CONTRACTOR'S RESPONSIBLE PARTY WILL BE THE SPILL PREVENTION AND CLEANUP COORDINATOR. THE CONTRACTOR IS RESPONSIBLE FOR ENSURING THAT THE SITE SUPERINTENDENT HAS HAD APPROPRIATE TRAINING FOR HAZARDOUS MATERIALS HANDLING, SPILL MANAGEMENT, AND CLEANUP.

12.4.5. IF SPILLS REPRESENT AN IMMINENT THREAT OF ESCAPING THE SITE AND ENTERING RECEIVING WATERS, PERSONNEL WILL RESPOND IMMEDIATELY TO CONTAIN THE RELEASE AND NOTIFY THE SUPERINTENDENT AFTER THE SITUATION HAS BEEN STABILIZED.

12.4.6. IF AN OIL SHEEN IS OBSERVED ON SURFACE WATER (E.G. SETTLING PONDS, DETENTION PONDS, SWALES), ACTION WILL BE TAKEN IMMEDIATELY TO REMOVE THE MATERIAL CAUSING THE SHEEN. THE CONTRACTOR WILL USE APPROPRIATE MATERIALS TO CONTAIN AND ABSORB THE SPILL. THE SOURCE OF THE OIL SHEEN WILL ALSO BE IDENTIFIED AND REMOVED OR REPAIRED AS NECESSARY TO PREVENT FURTHER RELEASES.

12.4.7. IF A SPILL OCCURS THE CONTRACTOR'S SITE SUPERINTENDENT SHALL BE RESPONSIBLE FOR COMPLETING THE SPILL REPORTING FORM AND FOR REPORTING THE SPILL TO THE CONSTRUCTION ENGINEER AND/OR PROJECT ENGINEER. ALL SPILLS MUST BE REPORTED TO THE APPROPRIATE AGENCY, AND MEASURES SHALL BE TAKEN IMMEDIATELY TO PREVENT THE

VOID FOR BIDDING
FOR INFORMATION ONLY

HISTORIC FRANKLIN TENNESSEE

BRIAN A. RALSTIN
REGISTERED ENGINEER
XVI
AGRICULTURE
COMMERCE
No. 119633
STATE OF TENNESSEE
7/31/2020

CITY OF FRANKLIN
ENGINEERING DEPARTMENT

STORMWATER POLLUTION PREVENTION PLAN

POLLUTION OF WATERS OF THE STATE/U.S., INCLUDING GROUNDWATER, SHOULD A SPILL OCCUR.

12.4.8. APPROPRIATE CLEANUP MATERIALS AND EQUIPMENT SHALL BE MAINTAINED BY THE CONTRACTOR IN THE MATERIALS STORAGE AREA ON-SITE AND UNDER COVER. SPILL RESPONSE EQUIPMENT SHALL BE INSPECTED AND MAINTAINED BY THE CONTRACTOR AS NECESSARY TO REPLACE ANY MATERIALS USED IN SPILL RESPONSE ACTIVITIES.

12.5. SPILL NOTIFICATION (5.1)

WHERE A RELEASE CONTAINING A HAZARDOUS SUBSTANCE IN AN AMOUNT EQUAL TO, OR MORE THAN A REPORTABLE QUANTITY ESTABLISHED UNDER EITHER 40 CFR 117 OR 40 CFR 302 OCCURS DURING A 24 HOUR PERIOD:

12.5.1. THE PROJECT ENGINEER IS RESPONSIBLE FOR NOTIFYING THE REGIONAL PROJECT DEVELOPMENT OFFICE (E.G. TRANSPORTATION ENVIRONMENTAL STUDIES SPECIALIST) AS SOON AS HE OR SHE HAS KNOWLEDGE OF THE DISCHARGE.

12.5.2. THE CITY WILL NOTIFY THE LOCAL TDEC ENVIRONMENTAL FIELD OFFICE AND ANY OTHER APPLICABLE REGULATORY AGENCIES WITHIN 24 HOURS OF THE SPILL.

12.5.3. IN ADDITION TO ANY FOLLOW UP NOTIFICATIONS REQUIRED BY FEDERAL LAW, A WRITTEN DESCRIPTION OF THE RELEASE, DATE OF RELEASE AND CIRCUMSTANCES LEADING TO THE RELEASE, WHAT ACTIONS WERE TAKEN TO MITIGATE EFFECTS OF THE RELEASE, AND STEPS TAKEN TO MINIMIZE THE CHANCE OF FUTURE OCCURRENCES WILL BE SUBMITTED TO THE APPROPRIATE TDEC ENVIRONMENTAL FIELD OFFICE WITHIN 14 DAYS OF KNOWLEDGE OF THE RELEASE.

12.5.4. THE SWPPP MUST BE MODIFIED WITHIN 14 DAYS OF KNOWLEDGE OF THE RELEASE PROVIDING A DESCRIPTION OF THE RELEASE, CIRCUMSTANCES LEADING TO THE RELEASE, AND THE DATE OF RELEASE. THE SWPPP WILL BE REVIEWED AND MODIFIED AS NECESSARY TO IDENTIFY MEASURES TO PREVENT THE REOCCURRENCE OF SUCH RELEASES AND TO RESPOND TO SUCH RELEASES.

13. RECORD-KEEPING

13.1. REQUIRED RECORDS

THE CITY OR THEIR DULY AUTHORIZED REPRESENTATIVE WILL MAINTAIN AT THE SITE THE FOLLOWING RECORDS OF CONSTRUCTION ACTIVITIES (3.5.3.1.m) (4.1.5.) (6.2.1):

13.1.1. THE DATES WHEN MAJOR GRADING ACTIVITIES OCCUR.

13.1.2. THE DATES WHEN CONSTRUCTION ACTIVITIES TEMPORARILY OR PERMANENTLY CEASE ON A PORTION OF THE SITE.

13.1.3. THE DATES WHEN STABILIZATION MEASURES ARE INITIATED.

13.1.4. RECORDS EPSC INSPECTION REPORTS AND CORRECTIVE MEASURES.

13.1.5. RECORDS OF QUALITY ASSURANCE SITE ASSESSMENTS.

13.1.6. COPY OF SITE EPSC INSPECTOR'S CERTIFICATION AND/OR LICENSING

13.1.7. COPY OF REQUIRED SOIL ANALYSIS

13.1.8. A COPY OF ANY REGULATORY CORRESPONDENCE REGARDING THE EFFECTIVENESS OF THE *SWPPP* OR EPSC CONTROLS.

13.2. RAINFALL MONITORING PLAN (3.5.3.1.o):

13.2.1. EQUIPMENT

AT A MINIMUM, THE CONTRACTOR WILL INSTALL A FENCE POST TYPE RAIN GAUGE TO MEASURE RAINFALL. THE STANDARD FENCE POST RAIN GAUGE WILL BE A WEDGE-SHAPED GAUGE THAT MEASURES UP TO 6 INCHES OF RAINFALL. AN ENGLISH SCALE WILL BE PROVIDED ON ONE FACE, WITH A METRIC SCALE ON THE OTHER FACE. GRADUATION WILL BE PERMANENTLY MOLDED IN DURABLE WEATHER-RESISTANT PLASTIC. THE MINIMUM GRADUATION WILL BE 0.01 INCH (OR 0.1MM). AN ALUMINUM BRACKET WITH SCREWS MAY BE USED TO MOUNT THE GAUGE ON A WOODEN SUPPORT.

13.2.2. LOCATION

THE RAIN GAUGE WILL BE LOCATED AT OR ALONG THE PROJECT SITE, AS DEFINED IN THE NOI OF THE NPDES PERMIT, IN AN OPEN AREA SUCH THAT THE MEASUREMENT WILL NOT BE INFLUENCED BY OUTSIDE FACTORS (I.E. OVERHANGS, GUTTER, TREES, ETC.). AT LEAST ONE RAIN GAUGE PER LINEAR MILE IS REQUIRED ALONG (AS MEASURED ALONG THE CENTERLINE OF THE PRIMARY ALIGNMENT) THE PROJECT WHERE CLEARING, GRUBBING, EXCAVATION, GRADING, CUTTING OR FILLING IS ACTIVELY PERFORMED, OR EXPOSED SOIL HAS NOT YET BEEN PERMANENTLY STABILIZED.

13.2.3. METHODS

RAINFALL MONITORING WILL BE INITIATED PRIOR TO CLEARING, GRUBBING, EXCAVATION, GRADING, CUTTING, OR FILLING, EXCEPT AS SUCH MINIMAL CLEARING MAY BE NECESSARY TO INSTALL A RAIN GAUGE IN AN OPEN AREA. THE RAIN GAUGE WILL BE CHECKED FOR OPERATIONAL SOUNDNESS DAILY (DURING NORMAL BUSINESS HOURS) IN WET TIMES AND WEEKLY IN DRY TIMES. GAUGES WILL BE REPAIRED OR REPLACED ON THE SAME DAY IF FOUND TO BE NON-OPERATIONAL OR MISSING.

13.2.4. EACH RAIN GAUGE WILL BE READ (FOR DETAILED RECORDS OF RAINFALL) AND EMPTIED AFTER EVERY RAINFALL EVENT OCCURRING ON THE PROJECT SITE AT APPROXIMATELY THE SAME TIME OF THE DAY (DURING NORMAL BUSINESS HOURS). DURING PERIODS OF DRY CONDITIONS, IT WILL NOT BE NECESSARY TO READ THE RAIN GAUGE EVERY DAY. IN LIEU OF THIS REQUIREMENT ON WEEKENDS AND ON STATE HOLIDAYS, THE RAIN GAUGES CAN BE EMPTIED THE NEXT BUSINESS DAY AND A REFERENCE SITE USED FOR A RECORD OF DAILY AMOUNT OF PRECIPITATION FOR THOSE DAYS. A REFERENCE SITE IS THE DOCUMENTATION FROM THE CLOSEST GAUGE WITHIN PROXIMITY OF THE PROJECT FROM A RECOGNIZED SOURCE SUCH AS THE NOAA NATIONAL WEATHER SERVICE.

13.2.5. DETAILED RECORDS WILL BE RECORDED OF RAINFALL EVENTS INCLUDE DATES, AMOUNTS OF RAINFALL, AND THE APPROXIMATE DURATION (OR THE STARTING AND ENDING TIMES). THE RAINFALL RECORDS SHALL BE RECORDED ON THE TDOT RAINFALL RECORD SHEET AND SHALL BE MAINTAINED IN THE "DOCUMENTATION AND PERMITS" BINDER.

13.2.6. IF THE RAINFALL EVENT IS STILL IN PROGRESS AT THE DAILY RECORDING TIME, THE GAUGE WILL BE EMPTIED AND THE RECORD WILL INDICATE THAT THE STORM EVENT WAS STILL IN PROGRESS.

13.2.7. RAIN GAUGE INFORMATION (DETAILED RECORDS), INCLUDING THE LOCATION OF THE NEAREST OUTFALL, WILL BE RECORDED ON THE EPSC INSPECTION REPORT FORMS AT THE TIME OF MEASUREMENT.

13.3. KEEPING PLANS CURRENT (3.4)

13.3.1. THE EPSC PLAN IS TO SERVE AS AN INITIAL GUIDE FOR SITE PERSONNEL AS THE CONSTRUCTION PROCESS DEVELOPS. IT MUST BE AMENDED, MODIFIED, AND UPDATED WHENEVER EPSC INSPECTIONS INDICATE, OR WHERE STATE OR FEDERAL REGULATORY OFFICIALS DETERMINE EPSC MEASURES ARE PROVING INEFFECTIVE IN ELIMINATING OR SIGNIFICANTLY MINIMIZING POLLUTANT SOURCES OR ARE OTHERWISE NOT ACHIEVING THE GENERAL OBJECTIVES OF CONTROLLING POLLUTANTS IN STORMWATER DISCHARGES ASSOCIATED WITH THE CONSTRUCTION ACTIVITY.

13.3.2. THE STAGES DEPICTED WITHIN THE EPSC PLANS MAY NOT COINCIDE WITH THE ACTUAL STAGES OF CONSTRUCTION ESTABLISHED BY THE CONTRACTOR DURING CONSTRUCTION, THUS MODIFICATIONS WILL BE REQUIRED TO ENSURE THE EPSC PLAN IS MAINTAINED TO DEPICT CURRENT SITE CONDITIONS. IT SHOULD BE MAINTAINED SUCH THAT IT WILL ALWAYS REFLECT THE MEASURES THAT ARE INSTALLED DURING THE VARIOUS STAGES OF CONSTRUCTION. IT IS IMPRACTICAL TO DETERMINE ALL THE INTERMEDIATE STAGES OF CONSTRUCTION THAT WILL OCCUR, THUS THESE DOCUMENTS MUST BE UPDATED THROUGHOUT THE LIFE OF THE CONSTRUCTION PROJECT.

13.3.3. THE EPSC INSPECTOR OR THEIR DULY AUTHORIZED REPRESENTATIVE WILL MODIFY AND UPDATE THE SWPPP WHEN ANY OF THE FOLLOWING CONDITIONS APPLY:

13.3.3.1. WHENEVER THERE IS A CHANGE IN THE SCOPE OF THE PROJECT THAT WOULD BE EXPECTED TO HAVE A SIGNIFICANT EFFECT ON THE DISCHARGE OF POLLUTANTS TO THE WATERS OF THE STATE AND WHICH HAS NOT OTHERWISE BEEN ADDRESSED IN THE SWPPP;

13.3.3.2. WHENEVER INSPECTIONS OR INVESTIGATIONS BY SITE OPERATORS, LOCAL, STATE, OR FEDERAL OFFICIALS INDICATE THE SWPPP IS PROVING INEFFECTIVE IN ELIMINATING OR SIGNIFICANTLY MINIMIZING POLLUTANTS FROM CONSTRUCTION ACTIVITY SOURCES, OR IS OTHERWISE NOT ACHIEVING THE GENERAL OBJECTIVES OF CONTROLLING POLLUTANTS IN STORMWATER DISCHARGES ASSOCIATED WITH CONSTRUCTION ACTIVITY; WHERE LOCAL, STATE, OR FEDERAL OFFICIALS DETERMINE THAT THE SWPPP IS INEFFECTIVE IN ELIMINATING OR SIGNIFICANTLY MINIMIZING POLLUTANT SOURCES, A COPY OF ANY CORRESPONDENCE TO THAT EFFECT MUST BE RETAINED IN THE SWPPP;

13.3.3.3. WHEN ANY NEW OPERATOR AND/OR SUB-OPERATOR IS ASSIGNED OR RELIEVED OF THEIR RESPONSIBILITY TO IMPLEMENT A PORTION OF THE SWPPP;

13.3.3.4. TO PREVENT A NEGATIVE IMPACT TO LEGALLY PROTECTED STATE OR FEDERALLY LISTED OR PROPOSED THREATENED OR ENDANGERED AQUATIC FAUNA;

13.3.3.5. WHEN THERE IS A CHANGE IN CHEMICAL TREATMENT METHODS INCLUDING: USE OF DIFFERENT TREATMENT CHEMICALS, DIFFERENT DOSAGE OR APPLICATION RATES OR A DIFFERENT AREA OF APPLICATION NOT SPECIFIED ON THE EPSC PLANS.

13.3.3.6. ALL SWPPP REVISION(S) SHALL BE RECORDED WITHIN 7 DAYS BY THE PROJECT EPSC INSPECTOR.

13.3.3.7. WHEN A TMDL IS DEVELOPED FOR THE RECEIVING WATERS FOR A POLLUTANT OF CONCERN (SILTATION AND/OR HABITAT ALTERATION), CONSTRUCTION SHALL NOTIFY THE PERMITS SECTION FOR PROPER COORDINATION.

13.4. MAKING PLANS ACCESSIBLE

13.4.1. THE CITY WILL RETAIN A COPY OF THIS SWPPP (INCLUDING A COPY OF THE "DOCUMENTATION AND PERMITS" BINDER AT THE CONSTRUCTION SITE (OR OTHER LOCATION ACCESSIBLE TO TDEC AND THE PUBLIC) FROM THE DATE CONSTRUCTION COMMENCES TO THE DATE OF FINAL STABILIZATION. THE CITY WILL HAVE A COPY OF THE SWPPP AVAILABLE AT THE LOCATION WHERE WORK IS OCCURRING ON-SITE FOR THE USE OF OPERATORS AND THOSE IDENTIFIED AS HAVING RESPONSIBILITIES UNDER THE SWPPP WHENEVER THEY ARE ON THE CONSTRUCTION SITE (6.2).

13.4.2. PRIOR TO THE INITIATION OF LAND DISTURBING ACTIVITIES AND UNTIL THE SITE HAS MET THE FINAL STABILIZATION CRITERIA, THE CITY OR THEIR DULY AUTHORIZED REPRESENTATIVE WILL POST A NOTICE NEAR THE MAIN ENTRANCE OF THE CONSTRUCTION SITE WITH THE FOLLOWING INFORMATION (3.3.3) (6.2.1):

13.4.2.1. A COPY OF THE NOTICE OF COVERAGE (NOC) WITH THE NPDES PERMIT NUMBER FOR THE PROJECT;

13.4.2.2. THE INDIVIDUAL NAME, COMPANY NAME, E-MAIL ADDRESS (IF APPLICABLE) AND TELEPHONE NUMBER OF THE LOCAL PROJECT SITE OWNER AND OPERATOR CONTACT;

13.4.2.3. A BRIEF DESCRIPTION OF THE PROJECT; AND

13.4.2.4. THE LOCATION OF THE SWPPP.

13.4.3. ALL INFORMATION DESCRIBED IN SECTION 13.4.2 MUST BE MAINTAINED IN LEGIBLE CONDITION. IF POSTING THIS INFORMATION NEAR A MAIN ENTRANCE IS INFEASIBLE DUE TO SAFETY CONCERNS, THE NOTICE SHALL BE POSTED IN A LOCAL BUILDING. THE NOTICE MUST BE PLACED IN A PUBLICLY ACCESSIBLE LOCATION WHERE CONSTRUCTION IS ACTIVELY UNDERWAY AND MOVED AS NECESSARY.

13.5. NOTICE OF TERMINATION (8.0)

13.5.1. WHEN ALL STORMWATER DISCHARGES FROM CONSTRUCTION ACTIVITIES THAT ARE AUTHORIZED BY THE PERMIT ARE ELIMINATED BY FINAL STABILIZATION, THE CITY ENGINEER WILL SUBMIT A NOTICE OF TERMINATION (NOT) THAT IS SIGNED IN ACCORDANCE WITH THE PERMIT TO THE TDEC CENTRAL OFFICE IN NASHVILLE, TN.

13.5.2. FOR THE PURPOSES OF THE CERTIFICATION REQUIRED BY THE NOT, THE ELIMINATION OF STORMWATER DISCHARGES ASSOCIATED WITH THE CONSTRUCTION ACTIVITY MEANS THE

13.5.2.1. ALL EARTH-DISTURBING ACTIVITIES ON THE SITE ARE COMPLETED AND ALL DISTURBED SOILS AT THE PORTION OF THE CONSTRUCTION SITE WHERE THE OPERATOR HAD CONTROL HAVE BEEN FINALLY STABILIZED; AND

VOID FOR BID
FOR INFORMATION ONLY

HISTORIC FRANKLIN TENNESSEE

BRIAN A. RALSTIN
REGISTERED ENGINEER
AGRICULTURE COMMERCE
NO. 119633
STATE OF TENNESSEE
7/31/2020

CITY OF FRANKLIN
ENGINEERING DEPARTMENT

STORMWATER POLLUTION PREVENTION PLAN

TYPE	YEAR	PROJECT NO.	SHEET NO.
			S-7

13.5.2.2. ALL CONSTRUCTION MATERIALS, WASTE AND WASTE HANDLING DEVICES, AND ALL EQUIPMENT, AND VEHICLES THAT WERE USED DURING CONSTRUCTION HAVE BEEN REMOVED AND PROPERLY DISPOSED; AND

13.5.2.3. ALL STORMWATER CONTROLS THAT WERE INSTALLED AND MAINTAINED DURING CONSTRUCTION, EXCEPT THOSE THAT ARE INTENDED FOR LONG-TERM USE FOLLOWING TERMINATION OF PERMIT COVERAGE, HAVE BEEN REMOVED; AND

13.5.2.4. ALL POTENTIAL POLLUTANTS AND POLLUTANT GENERATING ACTIVITIES ASSOCIATED WITH CONSTRUCTION HAVE BEEN REMOVED; AND

13.5.2.5. THE PERMITTEE HAS IDENTIFIED WHO IS RESPONSIBLE FOR ONGOING MAINTENANCE OF ANY STORMWATER CONTROLS LEFT ON THE SITE FOR LONG-TERM USE FOLLOWING TERMINATION OF PERMIT COVERAGE; AND

13.5.2.6. TEMPORARY EPSC MEASURES HAVE BEEN OR WILL BE REMOVED AT AN APPROPRIATE TIME TO ENSURE FINAL STABILIZATION IS MAINTAINED; AND

13.5.2.7. ALL STORMWATER DISCHARGES ASSOCIATED WITH CONSTRUCTION ACTIVITIES FROM THE IDENTIFIED SITE THAT ARE AUTHORIZED BY A NPDES GENERAL PERMIT HAVE OTHERWISE BEEN ELIMINATED FROM THE PORTION OF THE CONSTRUCTION SITE WHERE THE OPERATOR HAD CONTROL.

13.6. RETENTION OF RECORDS (6.2)

TDOT WILL RETAIN COPIES OF THE SWPPP, ALL REPORTS REQUIRED BY THE PERMIT, AND RECORDS OF ALL DATA USED TO COMPLETE THE NOTICE OF INTENT FOR THE PROJECT FOR A PERIOD OF AT LEAST THREE (3) YEARS FROM THE DATE THE NOT WAS FILED.

14. SITE WIDE/PRIMARY PERMITTEE CERTIFICATION (7.7.5)

I CERTIFY UNDER PENALTY OF LAW THAT THIS DOCUMENT AND ALL ATTACHMENTS WERE PREPARED BY ME, OR UNDER MY DIRECTION OR SUPERVISION. THE SUBMITTED INFORMATION IS TO THE BEST OF MY KNOWLEDGE AND BELIEF, TRUE, ACCURATE, AND COMPLETE. I AM AWARE THAT THERE ARE SIGNIFICANT PENALTIES FOR SUBMITTING FALSE INFORMATION, INCLUDING THE POSSIBILITY OF FINE AND IMPRISONMENT. AS SPECIFIED IN TENNESSEE CODE ANNOTATED SECTION 39-16-702(a)(4), THIS DECLARATION IS MADE UNDER PENALTY OF PERJURY.

Paul P Holzer
AUTHORIZED PERSONNEL SIGNATURE (3.3.1)

Paul P Holzer
PRINTED NAME

Director of Engineering
TITLE

6/24/20
DATE

15. SECONDARY PERMITTEE (OPERATOR) CERTIFICATION (7.7.6)

I CERTIFY UNDER PENALTY OF LAW THAT I HAVE REVIEWED THIS DOCUMENT, ANY ATTACHMENTS, AND THE SWPPP REFERENCED ABOVE. BASED ON MY INQUIRY OF THE CONSTRUCTION SITE OWNER/DEVELOPER IDENTIFIED ABOVE AND/OR MY INQUIRY OF THE PERSON DIRECTLY RESPONSIBLE FOR ASSEMBLING THIS NOI AND SWPPP, I BELIEVE THE INFORMATION SUBMITTED IS ACCURATE. I AM AWARE THAT THIS NOI, IF APPROVED, MAKES THE ABOVE-DESCRIBED CONSTRUCTION ACTIVITY SUBJECT TO NPDES PERMIT NUMBER TNR100000, AND THAT CERTAIN OF MY ACTIVITIES ONSITE ARE THEREBY REGULATED. I AM AWARE THAT THERE ARE SIGNIFICANT PENALTIES, INCLUDING THE POSSIBILITY OF FINE AND IMPRISONMENT FOR KNOWING VIOLATIONS, AND FOR FAILURE TO COMPLY WITH THESE PERMIT REQUIREMENTS. AS SPECIFIED IN TENNESSEE CODE ANNOTATED SECTION 39-16-702(a)(4), THIS DECLARATION IS MADE UNDER PENALTY OF PERJURY.

AUTHORIZED OPERATOR (CONTRACTOR) SIGNATURE (3.3.1)

PRINTED NAME

TITLE

DATE

16. ENVIRONMENTAL PERMITS (9.0)

LIST ALL ENVIRONMENTAL PERMITS AND EXPIRATION DATES FOR PROJECT **(TO BE COMPLETED AT THE ENVIRONMENTAL PRECONSTRUCTION MEETING BY TDOT CONSTRUCTION OR THEIR DULY AUTHORIZED REPRESENTATIVE)**:

ENVIRONMENTAL PERMITS			
PERMIT	**YES OR NO**	**PERMIT OR TRACKING NO.**	**EXPIRATION DATE***
TDEC ARAP	YES		
CORPS OF ENGINEERS (USACE)	YES		
TVA 26A	NO		
TDEC CGP	NO		
OTHER:	NO		

*THE TDOT ENVIRONMENTAL DIVISION MUST BE NOTIFIED SIX MONTHS PRIOR TO PERMIT EXPIRATION DATE.

VOID FOR BIDDING
FOR INFORMATION ONLY

HISTORIC FRANKLIN TENNESSEE

BRIAN A. RALSTIN
REGISTERED ENGINEER
AGRICULTURE
COMMERCE
No. 119683
STATE OF TENNESSEE
7/31/2020

CITY OF FRANKLIN
ENGINEERING DEPARTMENT

STORMWATER POLLUTION PREVENTION PLAN

TYPE	YEAR	PROJECT NO.	SHEET NO.
			S-8

17. **OUTFALL TABLE (3.5.1.d, 5.4.1.g)**

EPSC STAGE	OUTFALL LABEL	SUB OUT-FALL	STATION CL, LT OR RT	SLOPE WITHIN ROW (%)	STAGE 1 DRAINAGE AREA (AC)	STAGE 2 DRAINAGE AREA (AC)	STAGE 3 DRAINAGE AREA (AC)	SEDIMENT BASIN OR EQUIVALENT MEASURE(S) (YES, NO OR N/A)	RECEIVING RESOURCE (TDOT EBR LABEL) OR OTHER	COMMENTS
1	1	-	LT	0.54	0.337			NO	HARPETH RIVER	
1	2	-	LT	-	-			NO	HARPETH RIVER	
1	2	A	RT	2.00	0.031			NO	HARPETH RIVER	
1	2	B	RT	2.00	0.012			NO	HARPETH RIVER	
1	2	C	RT	2.00	0.017			NO	HARPETH RIVER	
1	2	D	RT	2.00	0.076			NO	HARPETH RIVER	
1	2	E	RT	2.05	0.056			NO	HARPETH RIVER	
1	2	F	LT	2.08	0.042			NO	HARPETH RIVER	
1	2	G	LT	2.18	0.103			NO	HARPETH RIVER	
1	3	-	LT	7.13	0.952			NO	HARPETH RIVER	
1	4	-	LT	1.50	0.862			NO	HARPETH RIVER	
1	5	-	LT	2.36	0.081			NO	HARPETH RIVER	
1	7	-	RT	0.14	0.131			NO	HARPETH RIVER	
1	8	-	RT	2.14	0.981			NO	HARPETH RIVER	
1	9	-	RT	3.85	0.376			NO	HARPETH RIVER	
1	10	-	LT	5.51	0.563			NO	HARPETH RIVER	
1	11	-	LT	3.32	0.391			NO	HARPETH RIVER	
1	12	-	LT	-	-			NO	HARPETH RIVER	
1	12	A	RT	0.66	0.075			NO	HARPETH RIVER	
1	12	B	RT	0.32	0.116			NO	HARPETH RIVER	
1	13	-	LT	4.43	0.895			NO	HARPETH RIVER	
1	15	-	LT	4.20	0.545			NO	HARPETH RIVER	
1	16	-	LT	-	-			NO	HARPETH RIVER	
1	16	A	LT	0.52	0.107			NO	HARPETH RIVER	
1	DA1	-	LT	1.33	8.270			YES	HARPETH RIVER	EQUIVALENT MEASURES
1	DA2	-	LT	1.33	7.970			YES	HARPETH RIVER	EQUIVALENT MEASURES
1	DA3	-	LT	1.33	1.020			NO	HARPETH RIVER	
1	DA4	-	LT	1.33	4.410			NO	HARPETH RIVER	
2	1	-	LT	-		-		NO	HARPETH RIVER	
2	2	-	LT	0.60		-		NO	HARPETH RIVER	
2	2	A	LT	0.62		0.122		NO	HARPETH RIVER	
2	2	B	LT	0.93		0.142		NO	HARPETH RIVER	
2	2	C	LT	0.83		0.156		NO	HARPETH RIVER	
2	2	D	RT	0.98		0.031		NO	HARPETH RIVER	
2	2	E	RT	1.13		0.012		NO	HARPETH RIVER	
2	2	F	RT	0.67		0.017		NO	HARPETH RIVER	

ALL UNUSED FIELDS WITHIN THE OUTFALL TABLE ARE TO BE SHADED, HATCHED, OR REMOVED TO INDICATE THEIR NON-USAGE.

VOID FOR BIDDING
FOR INFORMATION ONLY

HISTORIC FRANKLIN TENNESSEE

BRIAN A. RALSTIN REGISTERED ENGINEER AGRICULTURE COMMERCE No. 119683 STATE OF TENNESSEE 7/31/2020

CITY OF FRANKLIN
ENGINEERING DEPARTMENT

STORMWATER POLLUTION PREVENTION PLAN

TYPE	YEAR	PROJECT NO.	SHEET NO.
			S-9

18. **OUTFALL TABLE (3.5.1.d, 5.4.1.g)**

EPSC STAGE	OUTFALL LABEL	SUB OUT-FALL	STATION CL, LT OR RT	SLOPE WITHIN ROW (%)	STAGE 1 DRAINAGE AREA (AC)	STAGE 2 DRAINAGE AREA (AC)	STAGE 3 DRAINAGE AREA (AC)	SEDIMENT BASIN OR EQUIVALENT MEASURE(S) (YES, NO OR N/A)	RECEIVING RESOURCE (TDOT EBR LABEL) OR OTHER	COMMENTS
2	2	G	RT	0.83		0.076		NO	HARPETH RIVER	
2	2	H	RT	0.11		0.056		NO	HARPETH RIVER	
2	2	I	LT	2.15		0.156		NO	HARPETH RIVER	
2	2	J	RT	0.34		0.042		NO	HARPETH RIVER	
2	2	K	RT	1.02		0.165		NO	HARPETH RIVER	
2	2	L	RT	1.32		0.028		NO	HARPETH RIVER	
2	2	M	RT	1.65		0.103		NO	HARPETH RIVER	
2	2	N	LT	2.29		0.155		NO	HARPETH RIVER	
2	3	-	LT	0.50		0.178		NO	HARPETH RIVER	
2	4	-	LT	2.47		0.363		NO	HARPETH RIVER	
2	5	-	LT	2.36		0.081		NO	HARPETH RIVER	
2	6	-	LT	-		-		NO	HARPETH RIVER	
2	6	A	LT	0.50		0.319		NO	HARPETH RIVER	
2	6	B	LT	0.25		3.453		NO	HARPETH RIVER	
2	7	-	RT	0.14		0.131		NO	HARPETH RIVER	
2	8	-	RT	2.14		0.981		NO	HARPETH RIVER	
2	9	-	RT	2.63		0.207		NO	HARPETH RIVER	
2	10	-	LT	2.54		0.273		NO	HARPETH RIVER	
2	11	-	LT	0.30		0.101		NO	HARPETH RIVER	
2	12	-	LT	-		-		NO	HARPETH RIVER	
2	12	A	LT	1.07		0.147		NO	HARPETH RIVER	
2	12	B	RT	0.66		0.075		NO	HARPETH RIVER	
2	12	C	RT	1.27		0.016		NO	HARPETH RIVER	
2	13	-	LT	2.92		0.088		NO	HARPETH RIVER	
2	14	-	LT	-				NO	HARPETH RIVER	
2	14	A	LT	1.23		0.106		NO	HARPETH RIVER	
2	14	B	LT	1.15		0.123		NO	HARPETH RIVER	
2	14	C	LT	1.32		0.160		NO	HARPETH RIVER	
2	15	-	LT	3.98		0.545		NO	HARPETH RIVER	
2	16	-	LT	-		-		NO	HARPETH RIVER	
2	16	A	RT	0.10		0.352		NO	HARPETH RIVER	
2	16	B	RT	0.25		0.107		NO	HARPETH RIVER	
2	16	C	RT	0.15		0.196		NO	HARPETH RIVER	
2	17	-	LT	-		-		NO	HARPETH RIVER	
2	17	A	LT	1.69		0.036		NO	HARPETH RIVER	
2	17	B	LT	1.35		0.064		NO	HARPETH RIVER	

ALL UNUSED FIELDS WITHIN THE OUTFALL TABLE ARE TO BE SHADED, HATCHED, OR REMOVED TO INDICATE THEIR NON-USAGE

VOID FOR BIDDING
FOR INFORMATION ONLY

HISTORIC FRANKLIN TENNESSEE

BRIAN A. RALSTIN REGISTERED ENGINEER AGRICULTURE COMMERCE No. 119683 STATE OF TENNESSEE 31/2020

CITY OF FRANKLIN
ENGINEERING DEPARTMENT

STORMWATER POLLUTION PREVENTION PLAN

TYPE	YEAR	PROJECT NO.	SHEET NO.
			S-10

19. **OUTFALL TABLE (3.5.1.d, 5.4.1.g)**

EPSC STAGE	OUTFALL LABEL	SUB OUT-FALL	STATION CL, LT OR RT	SLOPE WITHIN ROW (%)	STAGE 1 DRAINAGE AREA (AC)	STAGE 2 DRAINAGE AREA (AC)	STAGE 3 DRAINAGE AREA (AC)	SEDIMENT BASIN OR EQUIVALENT MEASURE(S) (YES, NO OR N/A)	RECEIVING RESOURCE (TDOT EBR LABEL) OR OTHER	COMMENTS
2	17	C	LT	2.85		0.056		NO	HARPETH RIVER	
2	17	D	LT	3.83		0.090		NO	HARPETH RIVER	
2	17	E	LT	3.36		0.182		NO	HARPETH RIVER	
2	17	F	LT	3.31		0.278		NO	HARPETH RIVER	
2	17	G	LT	1.90		0.086		NO	HARPETH RIVER	
2	17	H	LT	0.25		0.106		NO	HARPETH RIVER	
2	17	I	LT	0.66		0.136		NO	HARPETH RIVER	
2	17	J	LT	0.20		0.044		NO	HARPETH RIVER	
2	17	K	LT	1.27		0.115		NO	HARPETH RIVER	
2	18	-	LT	-		-		NO	HARPETH RIVER	
2	18	A	LT	2.11		0.047		NO	HARPETH RIVER	
2	18	B	LT	2.08		0.069		NO	HARPETH RIVER	EQUIVALENT MEASURES
2	DA1	-	LT	1.33		8.270		YES	HARPETH RIVER	EQUIVALENT MEASURES
2	DA2	-	LT	1.33		7.970		YES	HARPETH RIVER	
2	DA3	-	LT	1.33		1.020		NO	HARPETH RIVER	
2	DA4	-	LT	1.33		4.410		NO	HARPETH RIVER	
3	1	-	LT	-			-	NO	HARPETH RIVER	
3	2	-	LT	0.60			-	NO	HARPETH RIVER	
3	2	A	LT	0.62			0.122	NO	HARPETH RIVER	
3	2	B	LT	0.93			0.142	NO	HARPETH RIVER	
3	2	C	LT	0.83			0.156	NO	HARPETH RIVER	
3	2	D	LT	0.98			0.031	NO	HARPETH RIVER	
3	2	E	LT	1.13			0.012	NO	HARPETH RIVER	
3	2	F	LT	0.67			0.017	NO	HARPETH RIVER	
3	2	G	LT	0.83			0.076	NO	HARPETH RIVER	
3	2	H	LT	0.11			0.056	NO	HARPETH RIVER	
3	2	I	LT	2.15			0.156	NO	HARPETH RIVER	
3	2	J	RT	0.34			0.042	NO	HARPETH RIVER	
3	2	K	RT	1.02			0.165	NO	HARPETH RIVER	
3	2	L	RT	1.32			0.028	NO	HARPETH RIVER	
3	2	M	RT	1.65			0.103	NO	HARPETH RIVER	
3	2	N	LT	2.29			0.155	NO	HARPETH RIVER	
3	3	-	LT	0.50			0.178	NO	HARPETH RIVER	
3	4	-	LT	2.47			0.363	NO	HARPETH RIVER	
3	5	-	LT	2.36			0.081	NO	HARPETH RIVER	
3	6	-	LT	-			-	NO	HARPETH RIVER	

ALL UNUSED FIELDS WITHIN THE OUTFALL TABLE ARE TO BE SHADED, HATCHED, OR REMOVED TO INDICATE THEIR NON-USAGE.

VOID FOR BIDDING
FOR INFORMATION ONLY

HISTORIC FRANKLIN TENNESSEE

BRIAN A. RALSTIN REGISTERED ENGINEER No. 119683 STATE OF TENNESSEE 7/31/2020

CITY OF FRANKLIN
ENGINEERING DEPARTMENT

STORMWATER POLLUTION PREVENTION PLAN

TYPE	YEAR	PROJECT NO.	SHEET NO.
			S-11

20. **OUTFALL TABLE (3.5.1.d, 5.4.1.g)**

EPSC STAGE	OUTFALL LABEL	SUB OUT-FALL	STATION CL, LT OR RT	SLOPE WITHIN ROW (%)	STAGE 1 DRAINAGE AREA (AC)	STAGE 2 DRAINAGE AREA (AC)	STAGE 3 DRAINAGE AREA (AC)	SEDIMENT BASIN OR EQUIVALENT MEASURE(S) (YES, NO OR N/A)	RECEIVING RESOURCE (TDOT EBR LABEL) OR OTHER	COMMENTS
3	6	A	LT	0.50			0.319	NO	HARPETH RIVER	
3	6	B	LT	0.25			3.453	NO	HARPETH RIVER	
3	7	-	RT	0.14			0.131	NO	HARPETH RIVER	
3	8	-	RT	2.14			0.981	NO	HARPETH RIVER	
3	9	-	RT	2.63			0.207	NO	HARPETH RIVER	
3	10	-	LT	2.54			0.273	NO	HARPETH RIVER	
3	11	-	LT	0.30			0.101	NO	HARPETH RIVER	
3	12	-	LT	-			-	NO	HARPETH RIVER	
3	12	A	LT	1.07			0.147	NO	HARPETH RIVER	
3	12	B	RT	0.66			0.075	NO	HARPETH RIVER	
3	12	C	RT	1.27			0.016	NO	HARPETH RIVER	
3	13	-	LT	2.92			0.088	NO	HARPETH RIVER	
3	14	-	LT	-			-	NO	HARPETH RIVER	
3	14	A	LT	1.23			0.106	NO	HARPETH RIVER	
3	14	B	LT	1.15			0.123	NO	HARPETH RIVER	
3	14	C	LT	1.32			0.160	NO	HARPETH RIVER	
3	15	-	LT	3.98			0.545	NO	HARPETH RIVER	
3	16	-	LT	-			-	NO	HARPETH RIVER	
3	16	A	LT	0.10			0.352		HARPETH RIVER	
3	16	B	LT	0.25			0.107	NO	HARPETH RIVER	
3	16	C	RT	0.15			0.196	NO	HARPETH RIVER	
3	17	-	LT	-			-	NO	HARPETH RIVER	
3	17	A	LT	1.69			0.036	NO	HARPETH RIVER	
3	17	B	LT	1.35			0.064	NO	HARPETH RIVER	
3	17	C	LT	2.85			0.056	NO	HARPETH RIVER	
3	17	D	LT	3.83			0.090	NO	HARPETH RIVER	
3	17	E	LT	3.36			0.182	NO	HARPETH RIVER	
3	17	F	LT	3.31			0.278	NO	HARPETH RIVER	
3	17	G	LT	1.90			0.086	NO	HARPETH RIVER	
3	17	H	LT	0.25			0.106	NO	HARPETH RIVER	
3	17	I	LT	0.66			0.136		HARPETH RIVER	
3	17	J	LT	0.20			0.044	NO	HARPETH RIVER	
3	17	K	LT	1.27			0.115	NO	HARPETH RIVER	
3	18	-	LT				-	NO	HARPETH RIVER	
3	18	A	LT	2.11			0.047	NO	HARPETH RIVER	
3	18	B	LT	2.08			0.069	NO	HARPETH RIVER	

ALL UNUSED FIELDS WITHIN THE OUTFALL TABLE ARE TO BE SHADED, HATCHED, OR REMOVED TO INDICATE THEIR NON-USAGE.

VOID FOR BIDDING
FOR INFORMATION ONLY

HISTORIC FRANKLIN TENNESSEE

BRIAN A. RALSTIN
REGISTERED ENGINEER
XVI
AGRICULTURE COMMERCE
No. 115683
STATE OF TENNESSEE
7/31/2020

CITY OF FRANKLIN
ENGINEERING DEPARTMENT

STORMWATER POLLUTION PREVENTION PLAN

TYPE	YEAR	PROJECT NO.	SHEET NO.
			S-12

21. **OUTFALL TABLE (3.5.1.d, 5.4.1.g)**

EPSC STAGE	OUTFALL LABEL	SUB OUT-FALL	STATION CL, LT OR RT	SLOPE WITHIN ROW (%)	STAGE 1 DRAINAGE AREA (AC)	STAGE 2 DRAINAGE AREA (AC)	STAGE 3 DRAINAGE AREA (AC)	SEDIMENT BASIN OR EQUIVALENT MEASURE(S) (YES, NO OR N/A)	RECEIVING RESOURCE (TDOT EBR LABEL) OR OTHER	COMMENTS
3	DA1	-	LT	1.33			8.270	YES	HARPETH RIVER	EQUIVALENT MEASURES
3	DA2	-	LT	1.33			7.970	YES	HARPETH RIVER	EQUIVALENT MEASURES
3	DA3	-	LT	1.33			1.020	NO	HARPETH RIVER	
3	DA4	-	LT	1.33			4.410	NO	HARPETH RIVER	

ALL UNUSED FIELDS WITHIN THE OUTFALL TABLE ARE TO BE SHADED, HATCHED, OR REMOVED TO INDICATE THEIR NON-USAGE.

VOID FOR BIDDING
FOR INFORMATION ONLY

HISTORIC
FRANKLIN
TENNESSEE

BRIAN A. RALSTIN
REGISTERED ENGINEER
AGRICULTURE COMMERCE
No. 119683
STATE OF TENNESSEE
7/31/2020

CITY OF FRANKLIN
ENGINEERING DEPARTMENT

STORMWATER POLLUTION PREVENTION PLAN

TYPE	YEAR	PROJECT NO.	SHEET NO.
CONST.	2020	COF# 2019-0098	L-1

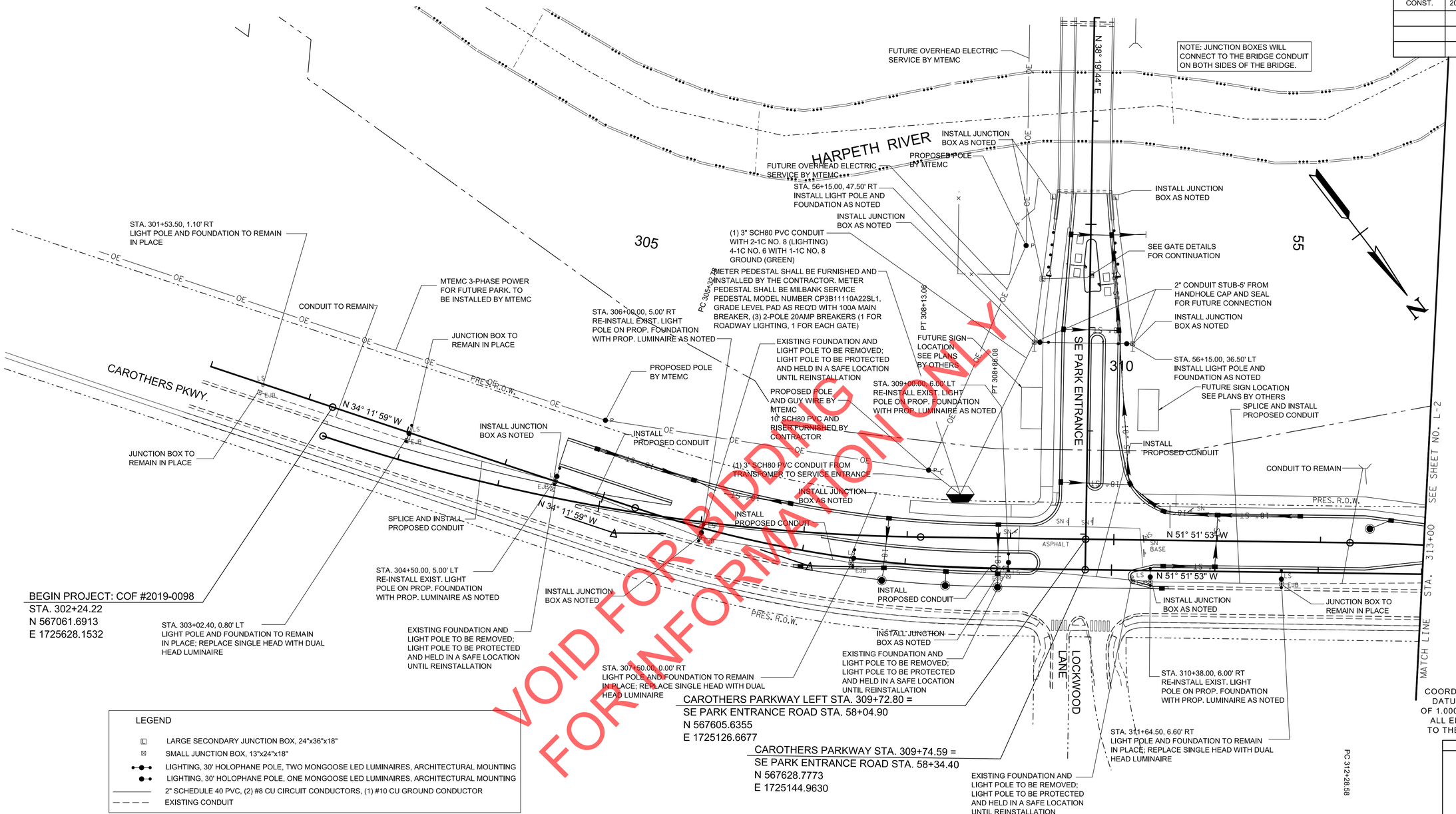

LEGEND

- LARGE SECONDARY JUNCTION BOX, 24"x36"x18"
- SMALL JUNCTION BOX, 13"x24"x18"
- LIGHTING, 30' HOLOPHANE POLE, TWO MONGOOSE LED LUMINAIRES, ARCHITECTURAL MOUNTING
- LIGHTING, 30' HOLOPHANE POLE, ONE MONGOOSE LED LUMINAIRES, ARCHITECTURAL MOUNTING
- 2" SCHEDULE 40 PVC, (2) #8 CU CIRCUIT CONDUCTORS, (1) #10 CU GROUND CONDUCTOR
- EXISTING CONDUIT

CAROTHERS PARKWAY LEFT
CURVE SBC5
PI 305+20.99
N 567,323.7287
E 1,725,485.7423
Δ 17° 39′ 54″ (LT)
D 3° 00′ 00″
R 1,909.86
L 588.84
T 296.77

CAROTHERS PARKWAY
CURVE SBC2
PI 307+10.84
N 567,464.1650
E 1,725,354.6355
Δ 17° 39′ 54″ (LT)
D 5° 00′ 00″
R 1,145.92
L 353.30
T 178.06
SE 0.020 FT/FT
DESIGN SPEED 40 MPH
TRANS. LENGTH 150

NOTE:
PROP STORM SEWER STRUCTURES SHOWN FOR REFERENCE ONLY

COORDINATES ARE NAD 83(1983), ARE DATUM ADJUSTED BY THE FACTOR OF 1.000082257 AND TIED TO THE TGRN. ALL ELEVATIONS ARE REFERENCED TO THE NAVD 1988 WITH GEOID 2003.

SEALED BY

BRIAN A. RALSTIN
REGISTERED ENGINEER
AGRICULTURE COMMERCE
No. 119683
STATE OF TENNESSEE
9/18/2020

HISTORIC FRANKLIN TENNESSEE

CITY OF FRANKLIN
ENGINEERING DEPARTMENT

LIGHTING DETAIL

STA. 302+00 TO STA. 313+00

SCALE: 1"= 50'

9/21/2020 8:42:50 AM
Y:\Nashville\16019000S\16019033.00\Eng_Docs\Roadway\Lighting Sht001.sht

TYPE	YEAR	PROJECT NO.	SHEET NO.
CONST.	2020	COF# 2019-0098	L-2

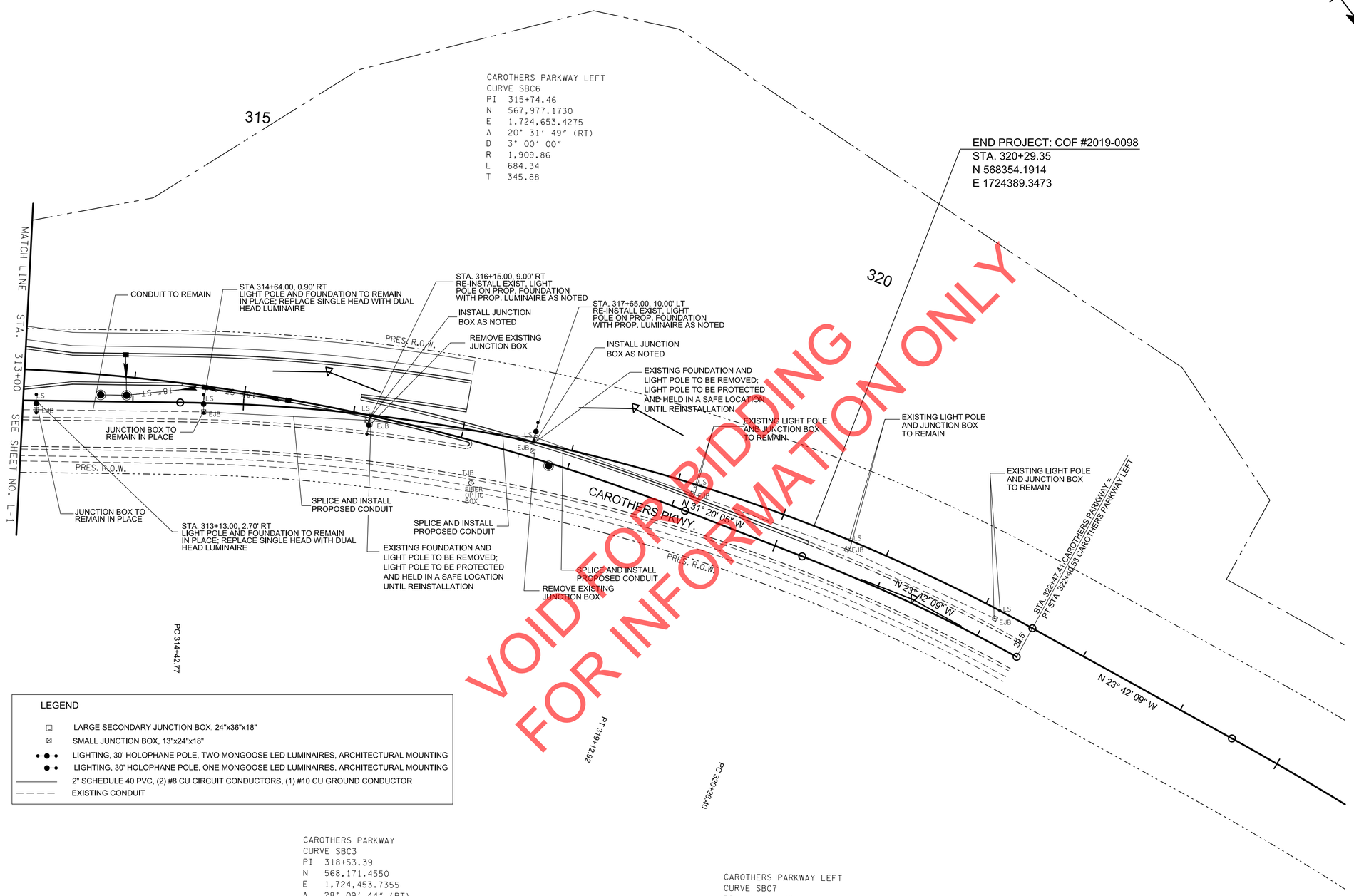

LEGEND

- LARGE SECONDARY JUNCTION BOX, 24"x36"x18"
- SMALL JUNCTION BOX, 13"x24"x18"
- LIGHTING, 30' HOLOPHANE POLE, TWO MONGOOSE LED LUMINAIRES, ARCHITECTURAL MOUNTING
- LIGHTING, 30' HOLOPHANE POLE, ONE MONGOOSE LED LUMINAIRES, ARCHITECTURAL MOUNTING
- 2" SCHEDULE 40 PVC, (2) #8 CU CIRCUIT CONDUCTORS, (1) #10 CU GROUND CONDUCTOR
- EXISTING CONDUIT

CAROTHERS PARKWAY
CURVE SBC3
PI 318+53.39
N 568,171.4550
E 1,724,453.7355
Δ 28° 09′ 44″ (RT)
D 3° 30′ 00″
R 1,637.02
L 804.63
T 410.62
SE 0.020 FT/FT
DESIGN SPEED 40 MPH
TRANS. LENGTH 150

CAROTHERS PARKWAY LEFT
CURVE SBC7
PI 321+33.62
N 568,461.1156
E 1,724,358.7853
Δ 7° 37′ 55″ (RT)
D 3° 33′ 51″
R 1,607.52
L 214.13
T 107.22

COORDINATES ARE NAD 83(1983), ARE DATUM ADJUSTED BY THE FACTOR OF 1.000082257 AND TIED TO THE TGRN. ALL ELEVATIONS ARE REFERENCED TO THE NAVD 1988 WITH GEOID 2003.

SEALED BY

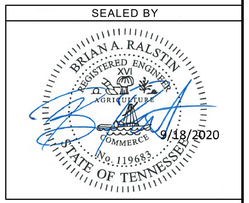

HISTORIC FRANKLIN TENNESSEE

CITY OF FRANKLIN
ENGINEERING DEPARTMENT

LIGHTING DETAIL

STA. 313+00 TO STA. 323+00

SCALE: 1"= 50'

9/21/2020 8:42:52 AM
Y:\Nashville\16019000S\16019033.00\Eng_Docs\Roadway\Lighting Sht002.sht

TYPE	YEAR	PROJECT NO.	SHEET NO.
CONST.	2020	COF# 2019-0098	L-3

LIGHTING NOTES

1. THE CONTRACTOR SHALL FURNISH ALL MATERIALS, INCLUDING, BUT NOT LIMITED TO POLES, LUMINAIRES, ARMS, CONCRETE FOUNDATIONS, PULL BOXES, JUNCTION BOXES, DISCONNECTS, CONDUCTORS, GROUND RODS, CONDUITS, LAMPS, PHOTOCELLS, CONNECTORS, FUSE AND FUSE HOLDERS, AND ALL OTHER MATERIALS NECESSARY TO COMPLETE THE WORK AS SPECIFIED.

2. THE CONTRACTOR SHALL FURNISH ALL LABOR, TOOLS, AND EQUIPMENT NECESSARY TO CONSTRUCT THE ELECTRICAL DISTRIBUTION AND LIGHTING SYSTEMS COMPLETE AND IN PLACE.

3. THE CONTRACTOR SHALL FOLLOW THE LIGHTING REQUIREMENTS AS NOTED IN THE MOST RECENT EDITION OF THE FRANKLIN TRANSPORTATION AND STREET TECHNICAL STANDARDS.

4. THE CONTRACTOR SHALL FURNISH TO THE OWNER, AN AS-BUILT PLAN SHOWING ALL COMPONENTS OF THE ELECTRICAL DISTRIBUTION AND LIGHTING SYSTEM PRIOR TO FINAL ACCEPTANCE.

5. CONDUITS BELOW GRADE SHALL BE APPROVED PVC SCHEDULE 80. ALL ABOVE GRADE CONDUITS SHALL BE PVC SCHEDULE 80.

6. CONDUITS BELOW GRADE SHALL BE INSTALLED AS PER THE DETAILS ON THE DRAWINGS.

7. SECONDARY CONDUIT ELBOWS FOR THE LIGHTING DISTRIBUTION SHALL BE 2" PVC SCHEDULE 40, STANDARD RADIUS.

8. SERVICE ENTRANCE CONDUIT ELBOWS SHALL BE 3" PVC SCHEDULE 80, LONG SWEEP (OR AS OTHERWISE SPECIFIED OR REQUIRED BY THE CITY OF FRANKLIN).

9. LIGHTING POLES SHALL BE SQUARE, ALUMINUM, AND BLACK IN COLOR. POLES SHALL BE 30' HOLOPHANE DRILLED FOR DOUBLE OR SINGLE FIXTURE MOUNTING OF THE MONGOOSE STYLE LIGHT AS NOTED IN THE DESIGN.

10. DUAL FIXTURE POLES SHALL BE #SSA3066JD2R3BK

11. SINGLE FIXTURE POLES SHALL BE #SSA3066JD1R3BK

12. EXISTING POLES NOTED FOR LUMINAIRE REPLACEMENT TO DUAL MOUNTING WERE ORIGINALLY PRE-DRILLED FOR THIS INSTALLATION.

13. POLE MOUNT LUMINAIRE SHALL BE A 4 CHIP ROADWAY DESIGN, SPILL LIGHT TYPE III LIGHTING PATTERN, AND BLACK IN COLOR. THE LUMINAIRE SHALL BE EATON STREETWORKS #USSL-G-A02-D-U-T3-SA-BK-7030-10K-4N7, AND SHALL HAVE A TEMPERATURE OF 3000K. EACH LUMINARE SHALL INCLUDE POLE MOUNT ARM ACCESSORY PRVSA-BK

14. THE LUMINAIRE SHALL INCLUDE A MULTI-RANGING DRIVER AND CONNECTED TO OPERATE AT 240 VOLTS, LINE TO LINE.

15. LIGHTS SHALL BE MOUNTED WITH A 5-DEGREE UPWARD TILT FROM HORIZONTAL.

16. THE CONTRACTOR SHALL FURNISH AND INSTALL ALL PULL BOXES AS REQUIRED BY OWNER FOR THE DISTRIBUION AND LIGHTING CIRCUITS. THE DRAWINGS SHOW PROPOSED LOCATIONS, AND ADDITIONAL PULL BOXES MAY BE REQUIRED BY OWNER.

17. SMALL AND LARGE PULL BOXES SHALL HAVE "COF STREET LIGHTING" CAST INTO THE TOP AND SHALL MEET ALL REQUIREMENTS SHOWN IN CITY OF FRANKLIN STANDARD DRAWINGS.

18. THE CONTRACTOR SHALL OBTAIN AN ELECTRICAL PERMIT AT NO COST TO THE CITY.

ESTIMATED LIGHTING QUANTITIES

	ITEM NO.	DESCRIPTION	UNIT	QUANTITY
(1)(4)	714-01.38	LIGHT POLE RELOCATION	EACH	6
(2)	714-03.03	DIRECT BURIAL CONDUIT (2" PVC, SCHEDULE 80)	L.F.	1700
(2)	714-05.05	PULL BOX (SMALL SECONDARY)	EACH	9
(2)	714-05.06	PULL BOX (LARGE)	EACH	3
	714-06.04	CABLE (1/C # 8 AWG)	L.F.	275
	714-06.05	CABLE (1/C # 6 AWG)	L.F.	275
(2)	714-08.09	LIGHT STANDARDS (SSA3066J)	EACH	2
(2)	714-08.28	FOUNDATION FOR LIGHT STANDARDS - ROADWAY (2' DIA X 8')	EACH	8
(1)(2)	714-08.32	REMOVAL OF LIGHT STANDARD AND FOUNDATION	EACH	6
(2)	714-09.09	LUMINARE	EACH	24
(5)	714-12	CONTROL CENTER	L.S.	1
(3)	714-75.02	PHOTO ELECTRIC RELAY 240V	EACH	2

(1) EXISTING LIGHT POLES TO BE REUSED AND INSTALLED ON NEW FOUNDATIONS. LIGHT POLES TO BE PROTECTED AND HELD IN A SAFE LOCATION UNTIL REINSTALLATION.
(2) PAYMENT FOR THIS WORK SHALL BE CONSIDERED AS FULL COMPENSATION FOR THIS ITEM, INCLUDING ALL LABOR, MATERIALS, AND EQUIPMENT REQUIRED TO COMPLETE THE ITEM IN ACCORDANCE WITH THE BIDDING DOCUMENTS.
(3) PHOTO ELECTRIC RELAY 240V SHALL BE EATON STREETWORKS ACCESSORY OA/RA1016
(4) FIELD DRILL MOUNTING HOLES FOR POLE MOUNT ARM IN ACCORDANCE WITH MANUFACTURER RECOMMENDATIONS
(5) METER PEDESTAL SHALL BE MILBANK SERVICE PEDESTAL MODEL NUMBER CP3B11110A22SL1. GRADE LEVEL PAD AS REQUIRED WITH 100A MAIN BREAKER AND (3) 2-POLE 20 AMP BREAKERS. INSTALLATION SHALL INCLUDE THE RISER AND AN ADDITIONAL 10FT OF SCH 80PVC TO CONNECT TO MAIN POWER SOURCE

VOID FOR BIDDING
FOR INFORMATION ONLY

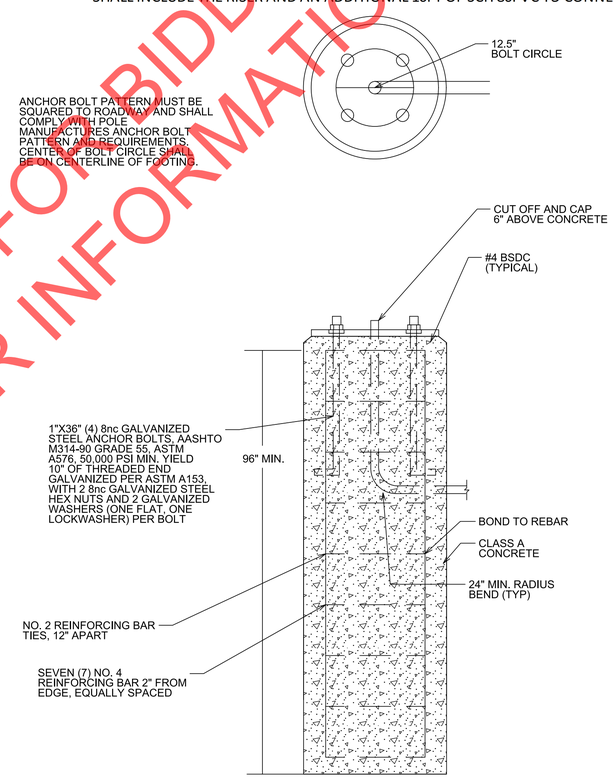

MODIFIED 30' - LIGHT FOUNDATION DETAIL
(SEE DRAWING L-8 FOR MORE INFORMATION)

SEALED BY

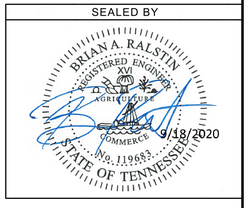

HISTORIC FRANKLIN TENNESSEE

CITY OF FRANKLIN
ENGINEERING DEPARTMENT

LIGHTING NOTES

9/21/2020 8:42:54 AM
Y:\Nashville\16019000S\16019033.00\Eng_Docs\Roadway\Lighting Sht003.sht

TYPE	YEAR	PROJECT NO.	SHEET NO.
CONST.	2020	COF# 2019-0098	L-4

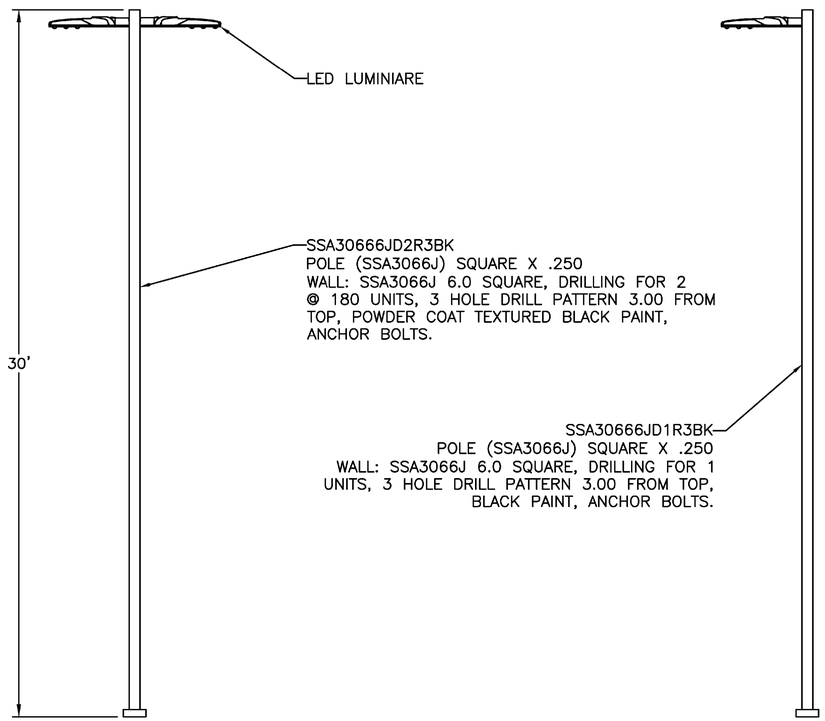

NOTES:

1) LED FIXTURE SHALL BE EITHER STREETWORKS/MCGRAW–EDISON VENTUS LED OR HOLOPHANE MONGOOSE LED OR APPROVED EQUAL.
2) SHOP DRAWINGS SHALL BE SUBMITTED PRIOR TO ORDERING MATERIALS.

N.T.S

HISTORIC FRANKLIN TENNESSEE	DOUBLE AND SINGLE LIGHT WITH 30' SQUARE STRAIGHT POLE		DWG. NO. L-7
	CITY OF FRANKLIN	CITY ENGINEER: Paul P Holzen	DATE: 1/1/2020
	NOT TO SCALE		

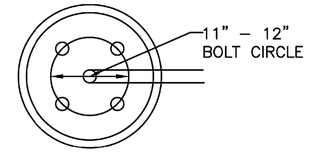

ANCHOR BOLT PATTERN MUST BE SQUARED TO ROADWAY AND SHALL COMPLY WITH POLE MANUFACTURES ANCHOR BOLT PATTERN AND REQUIREMENTS. CENTER OF BOLT CIRCLE SHALL BE ON CENTERLINE OF FOOTING.

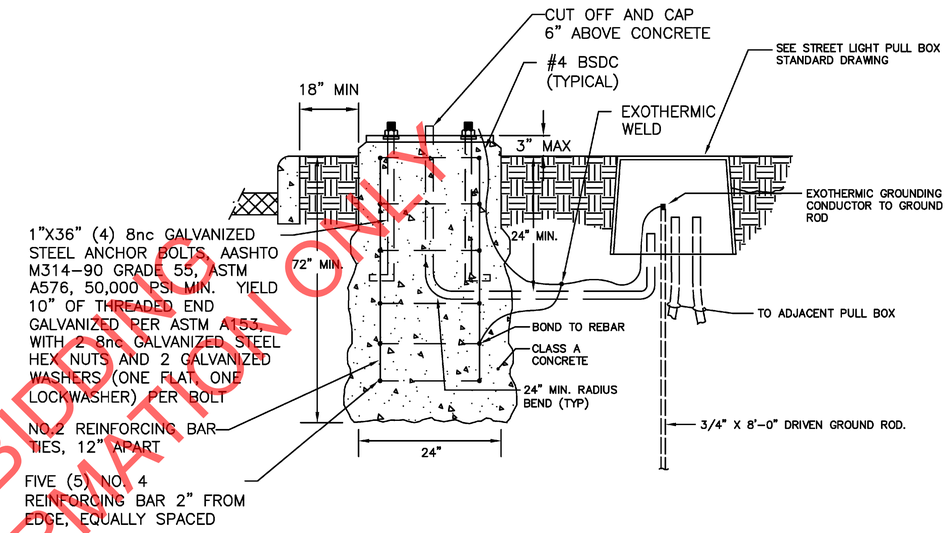

NOTES:

1) ANCHOR BOLT PATTERN MUST BE SQUARED TO ROADWAY AND SHALL COMPLY WITH POLE MANUFACTURES ANCHOR BOLT PATTERN AND REQUIREMENTS. CENTER OF BOLT CIRCLE SHALL BE ON CENTERLINE OF FOOTING.
2) ALL MATERIALS AND LABOR TO BE FURNISHED BY CONTRACTOR
3) ALGIN ANCHOR BOLTS TO BE PARALLEL TO STREET
4) COF STREET DEPARTMENT INSPECTION MUST BE APPROVED BEFORE CONCRETE POUR AND AT COMPLETION.
5) FINISH SHALL BE SMOOTH & FREE OF VOIDS.
6) THIS DETAIL TO BE USED IN DOWNTOWN FRANKLIN GATEWAY CORRIDORS AND CONNECTOR STREET.
7) PROVIDE POLE LENGTH REQUIRED BY SOIL CONDITIONS AND POLE / LUMINAIRE (INCLUDING WIND LOADING.)
8) WHERE REQUIRED BY SITE CONDITIONS, PROVIDE SPREAD–TYPE FOOTING.
9) FOUNDITIONS SHALL BE DESIGNED BY LICENSED ENGINEER

N.T.S

HISTORIC FRANKLIN TENNESSEE	30' LIGHT POLE - BASE DETAIL		DWG. NO. L-8
	CITY OF FRANKLIN	CITY ENGINEER: Paul P Holzen	DATE: 1/1/2020
	NOT TO SCALE		

VOID FOR BIDDING
FOR INFORMATION ONLY

SEALED BY

BRIAN A. RALSTIN
REGISTERED ENGINEER
No. 119683
STATE OF TENNESSEE
9/18/2020

HISTORIC FRANKLIN TENNESSEE

CITY OF FRANKLIN
ENGINEERING DEPARTMENT

LIGHTING DETAIL

9/21/2020 8:43:04 AM
Y:\Nashville\16019000S\16019033.00\Eng_Docs\Roadway\Lighting Sht004.sht

TYPE	YEAR	PROJECT NO.	SHEET NO.
CONST.	2020	COF# 2019-0098	L-5

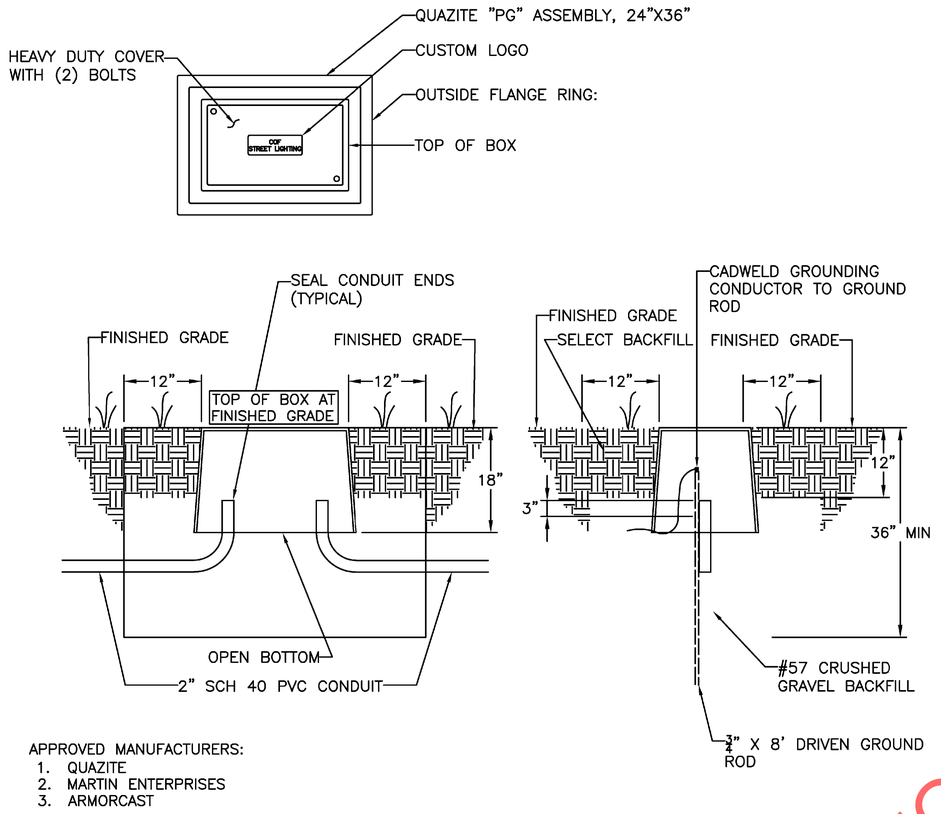

APPROVED MANUFACTURERS:
1. QUAZITE
2. MARTIN ENTERPRISES
3. ARMORCAST

NOTES:
1) EXCAVATE AND BACKFILL WITH MINIMUM EIGHTEEN INCH (18") THICK LAYER OF #57 CRUSHED GRAVEL.
2) INSTALL BOX AND BACKFILL TO WITHIN TWELVE INCHES (12") OF FINISHED GRADE WITH #57 CRUSHED GRAVEL.
3) BACKFILL INSIDE BOX WITHIN THREE INCHES (3") OF THE TOP OF THE CONDUIT WITH #57 CRUSHED GRAVEL.
4) THE TOP OF THE PULL-BOX MUST BE FLUSH WITH FINISHED GRADE.
5) PULL-BOX TO BE FURNISHED AND INSTALLED BY CUSTOMER.
6) SCHEDULE INSPECTION OF PULL-BOX INSTALLATION WITH CITY OF FRANKLIN STREET DEPARTMENT A MINIMUM OF THREE BUSINESS DAYS PRIOR TO INSPECTION.
7) CITY OF FRANKLIN RESERVES THE RIGHT TO REQUIRE A LARGER PULL-BOX. IF LARGER PULL-BOX IS REQUIRED, THE CITY WILL ISSUE SPECIFICATIONS AND INSTALLATION REQURIEMENTS FOR THE LARGER PULL-BOX.
8) PULL-BOXES ARE REQUIRED TO BE INSTALLED AT THE MIDPOINT OF ANY CIRCUIT RUN THAT EXCEED 300 FEET
9) PULL-BOXES ARE NOT TO BE INSTALLED IN THE PATH OF VEHICLAR TRAVEL.
10) PULL-BOXES SHALL BE UL LISTED.

N.T.S

HISTORIC FRANKLIN TENNESSEE

STREET LIGHT LARGE PULL BOX INSTALLATION DETAIL

CITY OF FRANKLIN | NOT TO SCALE | CITY ENGINEER: | DATE: 1/1/2020 | DWG. NO. **L-9**

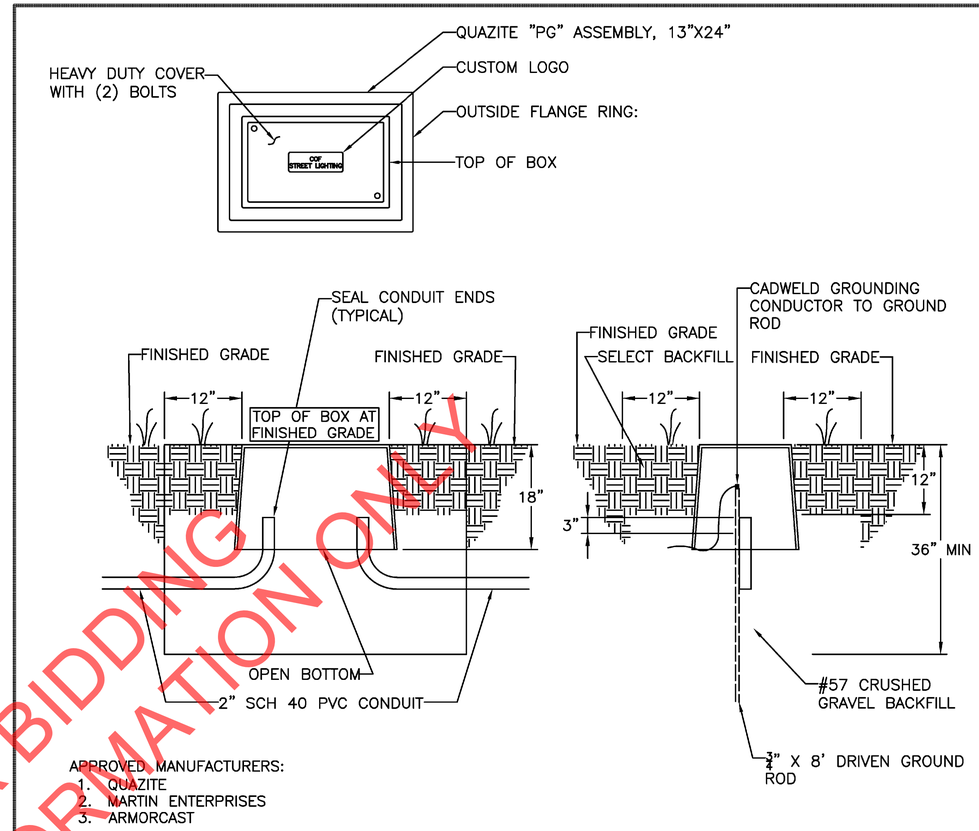

APPROVED MANUFACTURERS:
1. QUAZITE
2. MARTIN ENTERPRISES
3. ARMORCAST

NOTES:
1) EXCAVATE AND BACKFILL WITH MINIMUM EIGHTEEN INCH (18") THICK LAYER OF #57 CRUSHED GRAVEL.
2) INSTALL BOX AND BACKFILL TO WITHIN TWELVE INCHES (12") OF FINISHED GRADE WITH #57 CRUSHED GRAVEL.
3) BACKFILL INSIDE BOX WITHIN THREE INCHES (3") OF THE TOP OF THE CONDUIT WITH #57 CRUSHED GRAVEL.
4) THE TOP OF THE PULL-BOX MUST BE FLUSH WITH FINISHED GRADE.
5) PULL-BOX TO BE FURNISHED AND INSTALLED BY CUSTOMER.
6) SCHEDULE INSPECTION OF PULL-BOX INSTALLATION WITH CITY OF FRANKLIN STREET DEPARTMENT A MINIMUM OF THREE BUSINESS DAYS PRIOR TO INSPECTION.
7) CITY OF FRANKLIN RESERVES THE RIGHT TO REQUIRE A LARGER PULL-BOX. IF LARGER PULL-BOX IS REQUIRED, THE CITY WILL ISSUE SPECIFICATIONS AND INSTALLATION REQURIEMENTS FOR THE LARGER PULL-BOX.
8) PULL-BOXES ARE REQUIRED TO BE INSTALLED AT THE MIDPOINT OF ANY CIRCUIT RUN THAT EXCEED 300 FEET
9) PULL-BOXES ARE NOT TO BE INSTALLED IN THE PATH OF VEHICLAR TRAVEL
10) PULL-BOXES SHALL BE UL LISTED.

N.T.S

HISTORIC FRANKLIN TENNESSEE

STREET LIGHT SMALL PULL BOX INSTALLATION DETAIL

CITY OF FRANKLIN | NOT TO SCALE | CITY ENGINEER: | DATE: 1/1/2020 | DWG. NO. **L-10**

VOID FOR BIDDING
FOR INFORMATION ONLY

SEALED BY

BRIAN A. RALSTIN REGISTERED ENGINEER AGRICULTURE COMMERCE No. 119683 STATE OF TENNESSEE 9/18/2020

HISTORIC FRANKLIN TENNESSEE

CITY OF FRANKLIN
ENGINEERING DEPARTMENT

LIGHTING DETAIL

9/21/2020 8:43:09 AM
Y:\Nashville\16019000S\16019033.00\Eng_Docs\Roadway\Lighting Sht005.sht

TYPE	YEAR	PROJECT NO.	SHEET NO.
CONST.	2020	COF# 2019-0098	U1

ESTIMATED UTILITY QUANTITIES

	ITEM NO.	DESCRIPTION	UNIT	QUANTITY
(1)	UTL 1	CLASS A CONCRETE (ROADWAY)	C.Y.	5
(1)	RW1	12IN CLASS 350 DIP RESTRAINED JOINT RECLAIMED WATER MAIN	L.F.	422
(1)	RW2	12 IN CLASS 350 DIP RESTRAINED JOINT RECLAIMED WATER MAIN INSTALLED IN 24" STEEL CASING PIPE (.250 IN WALL THICKNESS) (PRICE INCLUDES INSTALLATION, CASING SPACERS, INSULATION)	L.F.	544
(1)	RW3	12IN RECLAIMED WATER MAIN BUTTERFLY VALVE AND BOX	EACH	2
(1)	RW4	1IN SDR9 RECLAIMED WATER SERVICE PIPE	L.F.	65
(1)	RW5	FIRE HYDRANT ASSEMBLY (RECLAIMED WATER MAIN) (ADD SIGN DO NOT DRINK)	EACH	1
(1)	RW6	1IN WATER SERVICE METER ASSEMBLY (INCLUDES METER BOX, COPPER METER SETTING AND RECLAIMED WATER IRRIGATION SIGN; NO METER REQUIRED AT THIS TIME) (RECLAIMED METER)	EACH	1
(1)	RW7	CUT AND CAP 12IN RECLAIMED WATER MAIN	EACH	2
(1)	W1	10IN CLASS 350 DIP RESTRAINDED JOINT WATER MAIN	L.F.	416
(1)	W2	10 IN CLASS 350 DIP RESTRAINED JOINT WATER MAIN INSTALLED IN 24" STEEL CASING PIPE (.250 IN WALL THICKNESS) (PRICE INCLUDES INSTALLATION, CASING SPACERS, INSULATION)	L.F.	544
(1)	W3	10IN WATER MAIN GATE VALVE AND BOX	EACH	2
(1)	W4	FIRE HYDRANT ASSEMBLY (WATER MAIN)	EACH	1
(1)	W5	CUT AND CAP 10 IN WATERLINE MAIN	EACH	2

FOOTNOTES:

1. SEE SPECIAL PROVISION REGARDING UTILITY MEASUREMENT AND PAYMENT DATED JUNE 1, 2020.

WATER NOTES:

1. CONTRACTOR TO USE OPEN JOINT DEFLECTION IN ACCORDANCE WITH PIPE MANUFACTURERS RECOMMENDATIONS WHERE REQUIRED TO MAINTAIN ALIGNMENT AS SHOWN ON DRAWINGS.
2. CONTRACTOR SHALL LOCATE EXISTING UTILITIES AT ANY CROSSING OR ANY OTHER LOCATION WHERE HIS WORK MAY ENCOUNTER THEM AND SHALL TAKE WHATEVER STEPS NECESSARY TO PROTECT THE EXISTING UTILITIES. CONTRACTOR SHALL BE RESPONSIBLE FOR COST OF ALL DAMAGES CAUSED BY HIS FAILURE TO ACCURATELY LOCATE AND PROTECT EXISTING UTILITIES.
3. THE EXISTENCE, ABSENCE, LOCATIONS, AND DEPTHS OF UTILITIES AND UNDERGROUND ITEMS HAVE BEEN DEFINED BY ORDINARY SURVEYING METHODS FROM FIELD OBSERVATIONS AND FROM INFORMATION FURNISHED BY THE UTILITY COMPANIES, AND ARE NOT GUARANTEED.
4. CONTRACTOR SHALL COORDINATE THE ELEVATION AND ALIGNMENT OF THE PROPOSED WATER LINES WITH OTHER CONSTRUCTION WORK IN PROGRESS TO AVOID CONFLICTS WITH PROPOSED AND EXISTING UTILITIES.
5. THE CONTRACTOR IS RESPONSIBLE FOR COORDINATION WITH ALL NECESSARY AGENCIES (TDOT, CITY OF FRANKLIN, ETC.).
6. IN AREAS SUBJECT TO TRAFFIC THE ENTIRE TRENCH SHALL BE BACKFILLED WITH CRUSHED STONE UNLESS OTHERWISE SHOWN ON THE PLANS OR DIRECTED BY THE ENGINEER.
7. FOR PERMANENT TRENCH REPAIR REFER TO WATER LINE TRENCH DETAIL SHOWN ON THE CITY OF FRANKLIN STANDARD DRAWING G-8.
8. CONSTRUCTION SHALL CONFORM TO THE STANDARD WATER SPECIFICATIONS FOR THE CITY OF FRANKLIN UNLESS OTHERWISE NOTED AND APPROVED BY THE ENGINEER.
9. NO PORTION OF THE WORK SHALL BE PLACED IN SERVICE UNTIL IT HAS BEEN CLEANED, TESTED, DISINFECTED, INSPECTED, AND APPROVED BY THE OWNER.
10. ALL FITTINGS SHALL BE RESTRAINED JOINT UNLESS OTHERWISE APPROVED BY THE OWNER AND ENGINEER. FOR RESTRAINED JOINT PIPE AND FITTINGS REFER TO SECTION 3 OF THE WATER LINE SPECIFICATIONS.

ESTIMATED GAS QUANTITIES

	ITEM NO.	DESCRIPTION	UNIT	QUANTITY
(1)	701-01.01	CONCRETE SIDWALK (4")	S.F.	450
(1)	791-03.04	4IN HDPE GAS MAIN	L.F.	576
(1)	791-04.13	HDD 4IN PE PIPE ROCK	L.F.	128
(1)	791-06.03	CONNECT TO 4 IN EX. PE MAIN	EACH	1
(1)	797-01.53	VENT PIPE ASSEMBLY	EACH	1

FOOTNOTES:

1) INCLUDES ALL MATERIALS INCLUDING SAND/STONE BEDDING, FLOWABLE FILL, TEMPORARY PAVEMENT IN OR OUT OF ROW, LABOR, EQUIPMENT FOR COMPLETE INSTALLATION OF PIPE INCLUDING BUT NOT LIMITED TO TRAFFIC CONTROL, EXCAVATION INCLUDING DIRT/ROCK, BACKFILLING, CREEK CROSSINGS PER SWPPP, COUPLINGS, FITTINGS, PIPE FUSION, APPURTENANCES, MAINTAINING THE TRENCH, PURGE POINT INSTALLATION, TESTING BY UTILITY SPECIFICATIONS TO INCLUDE BUT NOT LIMITED TO AIR, NITROGEN, HYDROSTATIC OR X-RAY, DEW POINT OR DRYING, AND ANY OTHER LABOR OR MATERIAL REQUIRED TO COMPLETE THE WORK AS SPECIFIED ON THE PLANS.

2) INCLUDES ALL MATERIALS, LABOR, EQUIPMENT, AND TRAFFIC CONTROL, INCLUDING BUT NOT LIMITED TO FLUID CONTAINMENT FOR COMPLETE HORIZONTAL DIRECTIONAL DRILLING INSTALLATION OF CASING PIPE OR UNCASED CARRIER PIPE IN BOTH UNCONSOLIDATED SOIL OR ROCK. STEEL PIPE INCLUDES SPECIAL COATING AS SPECIFIED ON PLANS AND SPECS. IF CASING PIPE HAS CARRIER PIPE, THE CARRIER PIPE SHALL BE PAID AT THE OPEN CUT ITEM PRICE.

3) INCLUDES ALL MATERIALS, LABOR, AND EQUIPMENT, NECESSARY FOR BORE & JACK OF GAS LINE CASING PIPE INCLUDING BUT NOT LIMITED TO ENTRY AND EXIT PITS, B & J EQUIPMENT AND TRAFFIC CONTROL. CARRIER PIPE SHALL BE PAID AT THE OPEN CUT ITEM PRICE.

4) INCLUDES ALL MATERIALS, LABOR, AND EQUIPMENT, NECESSARY FOR CONNECTING TO EXISTING GAS LINE, INCLUDING TRAFFIC CONTROL.

5) INCLUDES TRANSITION FITTINGS, VALVES, VALVE BOX, BOX ADJUSTMENT, VALVE BOX COLLAR, VALVE MARKER, EXCAVATION, BEDDING, BACKFILL, COUPLINGS, FUSION TEES, TAP OF EXISTING LINE, AND ALL OTHER NECESSARY MATERIALS AND LABOR FOR COMPLETE INSTALLATION OF ASSEMBLY, INCLUDING TRAFFIC CONTROL.

6) INCLUDES ALL MATERIALS, PARTS, LABOR, EQUIPMENT, MACHINERY, TOOLS, OR APPARATUS NECESSARY FOR INSTALLATION OF GAS SERVICE ASSEMBLIES AS DESCRIBED IN THE PLANS AND SPECS. INSTALLATION FOR LONG SIDE AND SHORT SIDE APPLICATIONS. SERVICE PIPE SHALL BE PAID PER LINEAR FOOT INSTALLED.

7) INCLUDES ALL MATERIALS, LABOR, AND EQUIPMENT FOR COMPLETE INSTALLATION OF INDIVIDUAL ITEM AS SPECIFIED ON BID FORM AND UTILITY SPECIFICATIONS.

8) INCLUDES ALL MATERIALS, LABOR, AND EQUIPMENT FOR REMOVAL OF ITEM.

9) ALL MATERIALS, LABOR, AND EQUIPMENT FOR RETIREMENT OF ITEM INCLUDING STABILIZING THE ITEM OF PLANT PER UTILITY SPECIFICATIONS.

NOTE:

Contractor agrees to assume liability for, and agrees to indemnify, defend and save and keep City of Franklin and the owner of any facilities being relocated by Contractor, their agents, employees and representatives, from and against, any and all liabilities, obligations, losses, damages, penalties, fines, amounts in settlement, claims, actions, proceedings, suits, judgements, costs, interest, expenses and disbursements of any kind and nature whatsoever arising under any theory, of legal liability (including attorneys fees and costs) (a "Claim") that may be imposed on, incurred by or asserted against the indemnified party, its agents, employees or representatives, in any way relating to, resulting from, based upon or arising out of Contractor's relocation of utility facilities or work or activities in connection therewith; provided, however, that Contractor is not required to indemnify the indemnified party, its agents, employees or representatives, for any Claim against an indemnitee (unless attributed of imputed to such indemnitee by reason of any act or omission of the Contractor, whether as agent for the Contractor or otherwise). "Theories of Legal Liability" include, but are not limited to, contract, tort, strict liability, breach of express or implied warranty and breach of implied covenant.

The obligation of a Contractor to defend City of Franklin and the owner of any facilities being relocated by Contractor, their agents, employees or representatives, against any Claim is separate and distinct from the obligation of indemnity set forth in this Agreement. Contractor shall have the right and obligation to assume the defense of any Claim with counsel chosen by the indemnified party and reasonably acceptable to Contractor, provided that counsel to Contractor may participate in the defense of the Claim with counsel for the indemnified party, and such counsel shall remain at the cost and expense of the Contractor. Contractor will not have the right to assume the defense of a Claim made against both the indemnified party, its agents, representatives or employees, and Contractor if counsel for the Contractor or the indemnified party advises in writing that conflicts of interest would under applicable ethical principles preclude a single counsel or firm from defending both parties.

VOID FOR BIDDING
FOR INFORMATION ONLY

SEALED BY

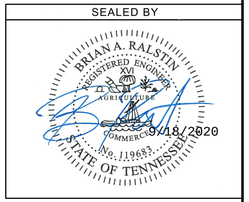

HISTORIC FRANKLIN TENNESSEE

CITY OF FRANKLIN
ENGINEERING DEPARTMENT

ESTIMATED UTILITY QUANTITIES

9/22/2020 5:05:24 PM
Y:\Nashville\16019000S\16019033.00\Eng_Docs\Roadway\UTILITY 000 Quantities.sht

TYPE	YEAR	PROJECT NO.	SHEET NO.
CONST.	2020	COF# 2019-0098	U2

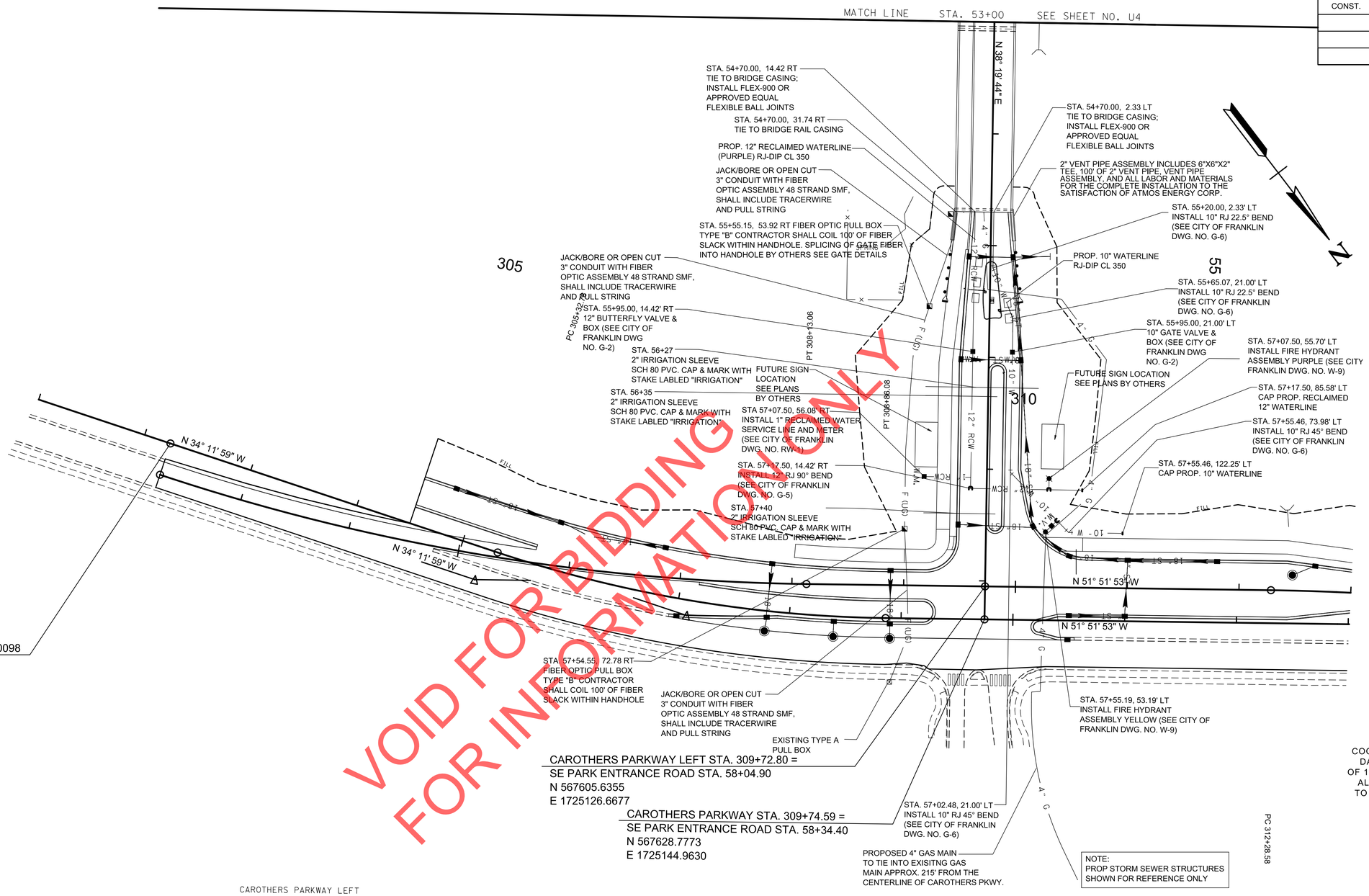

VOID FOR BIDDING
FOR INFORMATION ONLY

CAROTHERS PARKWAY LEFT
CURVE SBC5
PI 305+20.99
N 567,323.7287
E 1,725,485.7423
Δ 17° 39′ 54″ (LT)
D 3° 00′ 00″
R 1,909.86
L 588.84
T 296.77

CAROTHERS PARKWAY
CURVE SBC2
PI 307+10.84
N 567,464.1650
E 1,725,354.6355
Δ 17° 39′ 54″ (LT)
D 5° 00′ 00″
R 1,145.92
L 353.30
T 178.06
SE 0.020 FT/FT
DESIGN SPEED 40 MPH
TRANS. LENGTH 150

COORDINATES ARE NAD 83(1983), ARE DATUM ADJUSTED BY THE FACTOR OF 1.000082257 AND TIED TO THE TGRN. ALL ELEVATIONS ARE REFERENCED TO THE NAVD 1988 WITH GEOID 2003.

SEALED BY

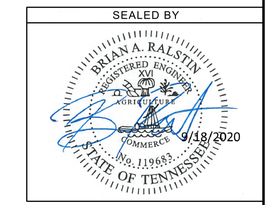

HISTORIC FRANKLIN TENNESSEE

CITY OF FRANKLIN ENGINEERING DEPARTMENT

UTILITIES

STA. 302+00 TO STA. 313+00
SCALE: 1"=50'

9/21/2020 8:43:21 AM
Y:\Nashville\16019000S\16019033.00\Eng_Docs\Roadway\UTILITY 001.sht

TYPE	YEAR	PROJECT NO.	SHEET NO.
CONST.	2020	COF# 2019-0098	U3

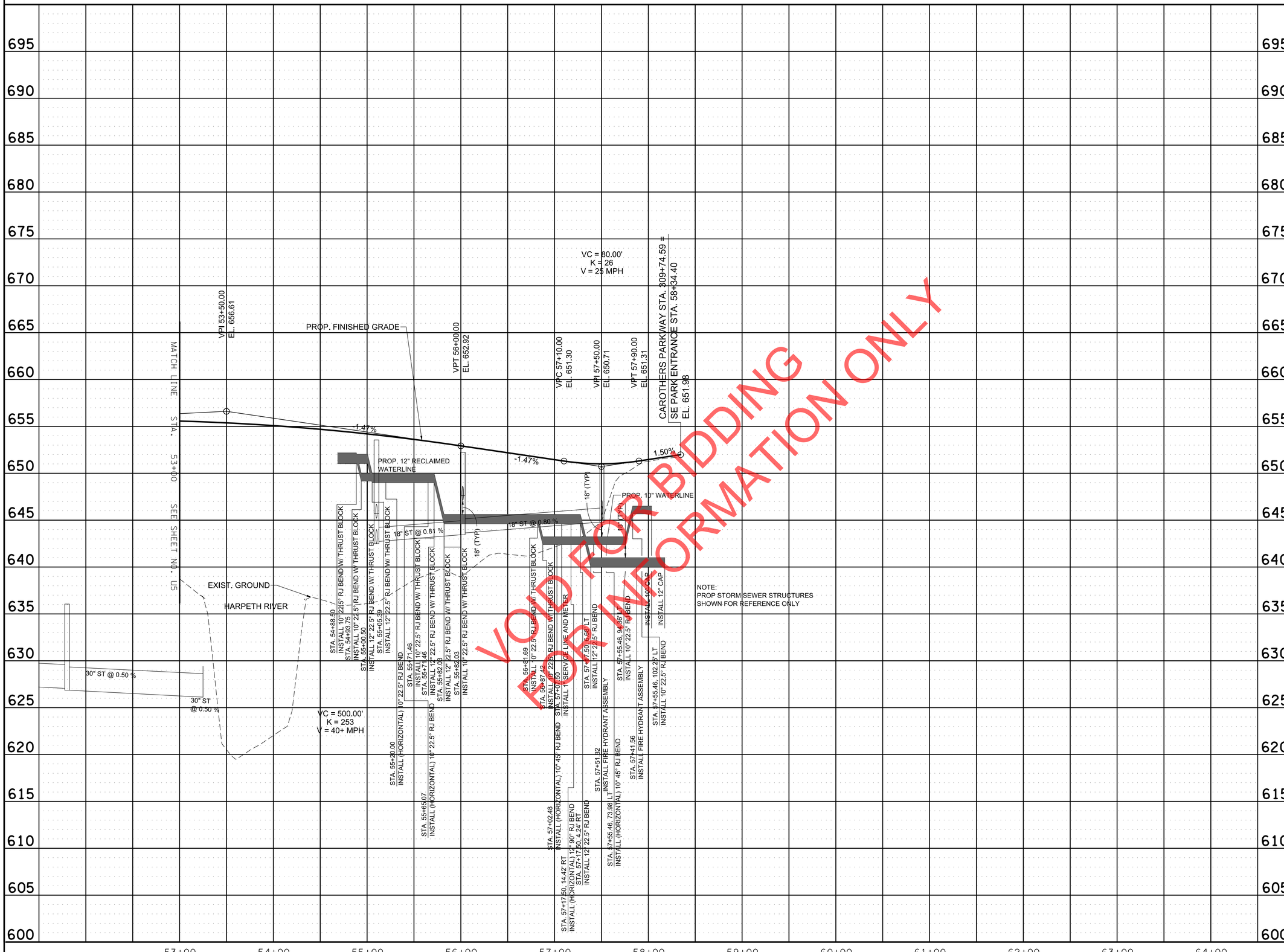

SEALED BY

BRIAN A. RALSTIN
REGISTERED ENGINEER
XVI
AGRICULTURE
COMMERCE
No. 119683
STATE OF TENNESSEE
9/18/2020

HISTORIC
FRANKLIN
TENNESSEE

CITY OF FRANKLIN
ENGINEERING DEPARTMENT

UTILITY PROFILE

SE PARK ENTRANCE

SCALE: 1"= 50' HORIZ.
1"= 5' VERT.

9/21/2020 8:43:24 AM
Y:\Nashville\16019000S\16019033.00\Eng_Docs\Roadway\UTILITY 002.sht

TYPE	YEAR	PROJECT NO.	SHEET NO.
CONST.	2020	COF# 2019-0098	U4

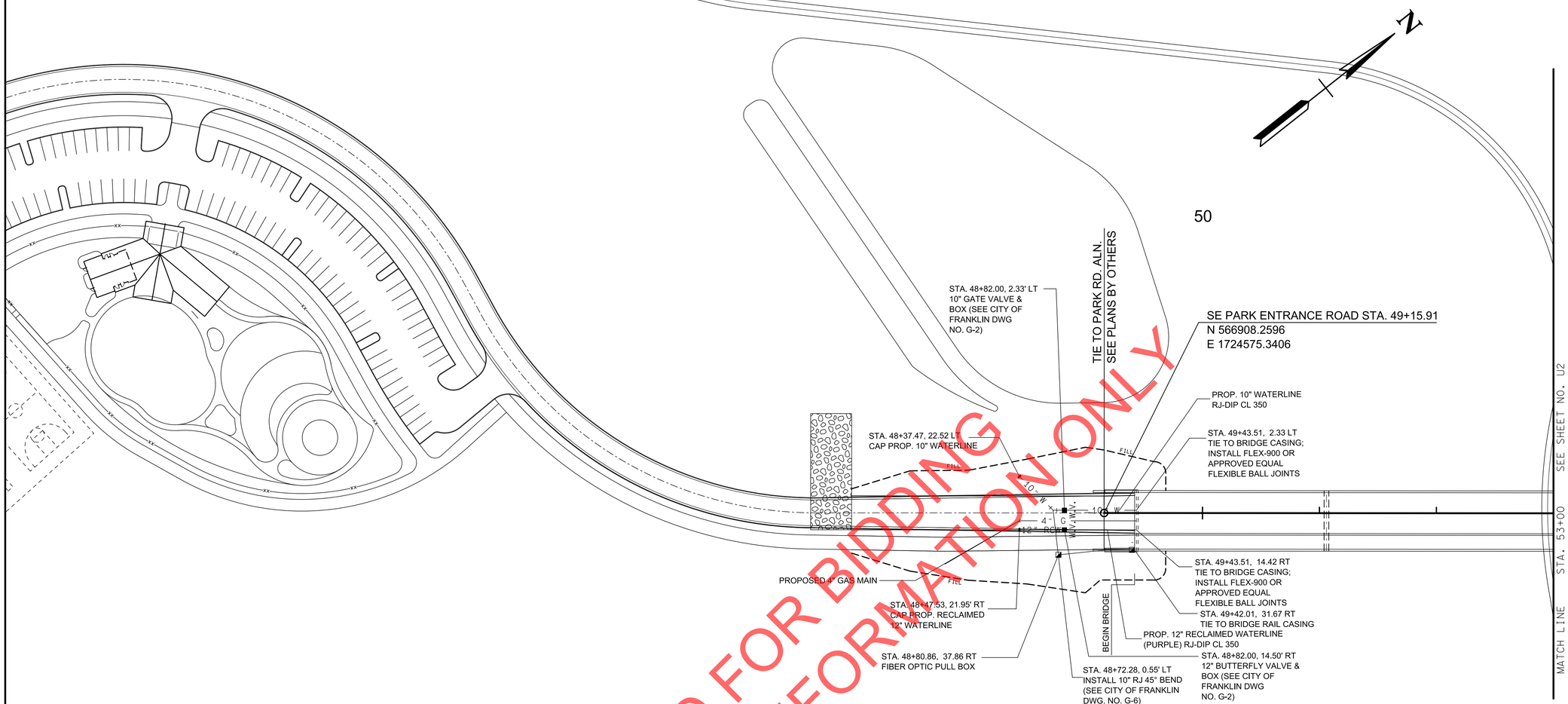

VOID FOR BIDDING
FOR INFORMATION ONLY

COORDINATES ARE NAD 83(1983), ARE DATUM ADJUSTED BY THE FACTOR OF 1.000082257 AND TIED TO THE TGRN. ALL ELEVATIONS ARE REFERENCED TO THE NAVD 1988 WITH GEOID 2003.

SEALED BY

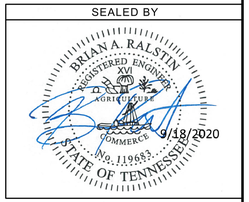

9/18/2020

HISTORIC FRANKLIN TENNESSEE

CITY OF FRANKLIN
ENGINEERING DEPARTMENT

UTILITIES

STA. 47+00 TO STA. 53+00
SCALE: 1"=50'

9/21/2020 8:43:26 AM
Y:\Washville\16019000S\16019033.00\Eng_Docs\Roadway\UTILITY 003.sht

TYPE	YEAR	PROJECT NO.	SHEET NO.
CONST.	2020	COF# 2019-0098	U5

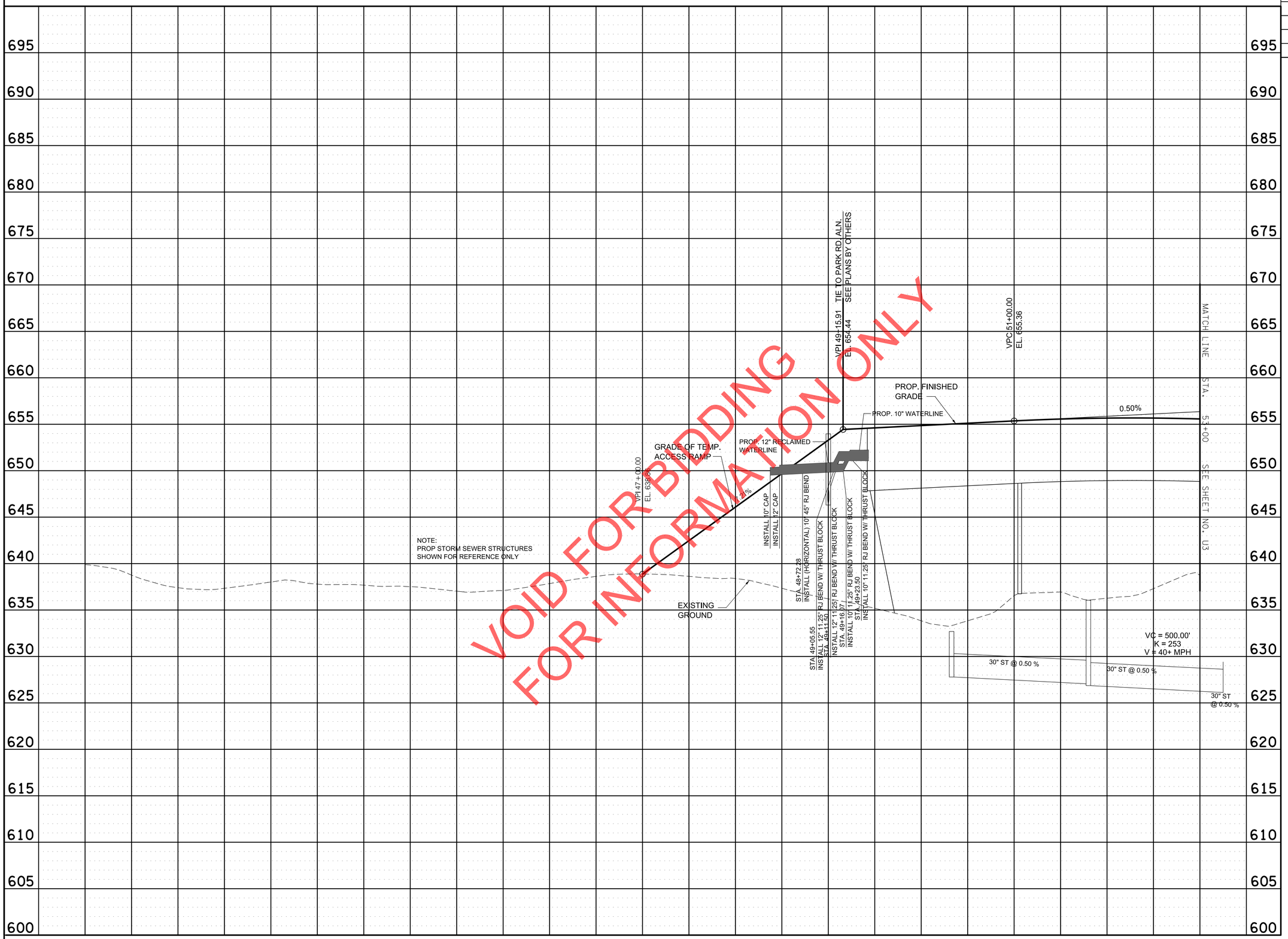

SEALED BY

BRIAN A. RALSTIN
REGISTERED ENGINEER
AGRICULTURE COMMERCE
No. 119683
STATE OF TENNESSEE

9/18/2020

HISTORIC FRANKLIN TENNESSEE

CITY OF FRANKLIN
ENGINEERING DEPARTMENT

UTILITY PROFILE

SE PARK ENTRANCE

SCALE: 1"= 50' HORIZ.
1"= 5' VERT.

9/21/2020 8:43:29 AM
Y:\Nashville\16019000S\16019033.00\Eng_Docs\Roadway\UTILITY 004.sht

TYPE	YEAR	PROJECT NO.	SHEET NO.
CONST.	2020	COF# 2019-0098	U6

OQ TASKS

IT IS THE RESPONSIBILITY OF THE CONTRACTOR TO CONTACT THE ENGINEER, AT THE ADDRESS GIVEN, FOR THE LATEST, UPDATED SPECIFICATIONS FOR THE UTILITY.

MINIMUM OPERATOR QUALIFICATION (OQ) TASKS

TASK	SPAN OF CONTROL
F01 - JOINING OR CAPPING OF POLYETHYLENE PIPE WITH ELECTROFUSION (COUPLING FUSION)	1 TO 0
F02 - JOINING OF POLYETHYLENE PIPE WITH ELECTROFUSION (SADDLE FUSION)	1 TO 0
F03 - JOINING OR CAPPING OF POLYETHYLENE PIPE WITH HEAT FUSION (BUTT FUSION)	1 TO 0
F06 - JOINING OF POLYETHYLENE PIPE WITH MECHANICAL COMPRESSION COLLAR FITTING	1 TO 0
F08 - JOINING OF POLYETHYLENE PIPE WITH BOLT ON TAPPING TEE	1 TO 0
F12 - JOINING DISSIMILAR PIPE TYPES	1 TO 3
G03 - INSTALLATION / EXCAVATION OF PIPELINE	1 TO 1
I05 - INSTALLING / REPLACING CP TEST LEADS TO PIPE	1 TO 1
I06 - INSTALLING ANODES AND INSULATING DEVICES	1 TO 1
I07 - INSPECTING FOR EXTERNAL CORROSION AND INSPECTING, INSTALLING AND REPAIRING PIPE COATING	1 TO 1
I09 - INTERNAL CORROSION CONTROL	1 TO 1
L02 - ACTIVATING AND PURGING / BLOWDOWN PIPELINE	1 TO 1
L04 - TAPPING PIPELINES UNER PRESSURE WITH SELF-TAPPING TEE	1 TO 1
M03 - LOCATING AND MARKING LINES	1 TO 1
M05 - TESTING MAINS AND TRANSMISSION LINES	1 TO 1
M08 - PREVENTING ACCIDENTAL IGNITION	1 TO 1
M11 - ABANDONING / DEACTIVATING OR SHUTTING DOWN GAS FACILITIES	1 TO 3
M14 - DAMAGE PREVENTION DURING EXCAVATION OR ENCROACHMENT	1 TO 1
M16 - RECOGNIZE AND REACT TO GENERIC ABNORMAL OPERATING CONDITIONS (AOC)	1 TO 0
M17 - INSTALLING / MAINTAINING PIPELINE MARKERS	1 TO 3

All correspondence should be directed as follows:

Atmos Energy Corporation
attn: Engineering Department
810 Crescent Centre Drive, Suite 600
Franklin, Tennessee 37067-6226
615.771.8311 office 615.771.8302 fax

OPERATOR QUALIFICATIONS

The natural gas work is regulated by the Code of Federal Regulations, Title 49, Parts 192 and 199. To comply with the regulations, the Contractor MUST be a subscriber to ISNetworld ("ISN"), without exception.

ISNetworld
3232 McKinney Avenue, Suite 1500
Dallas, Texas 75204
1.800.976.1303
www.isnetworld.com

In addition, the Contractor, utilizing an Operator Qualification (OQ) Plan approved by Atmos Energy, MUST use the services of an approved OQ Assessment Provider to administer and manage their training and qualification assessment process, to ensure compliance with the OQ Plan, and to ensure records are submitted to ISN by the process established by ISN.

The following OQ Assessment Providers are approved by Atmos Energy:

Energy Worldnet, Inc.
940.626.1941
www.energyworldnet.com

Gajeske OQ Services
972.314.8100
www.gajeske.com

Midwest Energy Association
651.289.9600 ext. 101
www.midwestenergy.org

Two of the OQ Covered Tasks are supported with certifications: welding of steel pipelines; joining plastic pipe with heat. These certifications will be performed by Atmos Energy. Contact the engineer, at the address given, to schedule these certifica tions.

In addition, to comply with CFR, Title 49, Part 199, the Contractor MUST submit their substance abuse plan to National Compliance Management Service, Inc. for review and approval.

National Compliance Management Service, Inc.
7 Compound Drive
Hutchinson, Kansas 67502-4349
620.669.4428
www.nationalcompliance.com

VOID FOR BIDDING
FOR INFORMATION ONLY

SEALED BY

HISTORIC FRANKLIN TENNESSEE

CITY OF FRANKLIN
ENGINEERING DEPARTMENT

OQ TASKS SHEET

7/30/2020 8:31:19 AM
Y:\Washville\16019000S\16019033.00\Eng_Docs\Roadway\UTILITY 005.sht

TYPE	YEAR	PROJECT NO.	SHEET NO.
CONST.	2020	COF# 2019-0098	U7

GENERAL CONSTRUCTION NOTES

1. SOME NOTES MAY NOT BE APPLICABLE TO THIS PROJECT BECAUSE OF PIPE MATERIALS USED.

2. THE CONTRACTOR RESPONSIBLE FOR PERFORMING THE GAS PIPELINE CONSTRUCTION AND RELOCATION FOR THIS PROJECT SHALL BE AN APPROVED ATMOS CONTRACTOR AND IS REQUIRED TO FOLLOW AND ADHERE TO ALL ATMOS ENERGY AND CITY OF FRANKLIN PROCEDURES AND GUIDELINES. AT A MINIMUM, ALL WORK PERFORMED IN THE CONSTRUCTION OF THIS PROJECT SHALL MEET THE REQUIREMENTS OF THE FOLLOWING CODES:
   A. CODE OF FEDERAL REGULATIONS - TITLE 49, PARTS 191 AND 192, "TRANSMISSION OF NATURAL GAS AND OTHER GAS BY PIPELINE";
   B. CODE OF FEDERAL REGULATIONS - TITLE 49, PART 199, "DRUG AND ALCOHOL TESTING";
   C. ANSI - B31.8, "GAS TRANSMISSION AND DISTRIBUTION PIPING SYSTEMS";
   D. ASTM D2513, "STANDARD SPECIFICATION FOR THERMOPLASTIC GAS PRESSURE PIPING SYSTEMS"; AND
   E. ASTM D3261, "STANDARD SPECIFICATION FOR BUTT HEAT FUSION POLYETHYLENE (PE) PLASTIC FITTINGS FOR POLYETHYLENE (PE) PLASTIC PIPE AND FITTINGS".

3. TO ENSURE COMPLIANCE WITH THE CODE OF FEDERAL REGULATIONS, TITLE 49, PARTS 191, 192 AND 199, THE CONTRACTOR SHALL BE A SUBSCRIBER TO ISNETWORLD (ISN).

4. TO COMPLY WITH THE CODE OF FEDERAL REGULATIONS (CFR) TITLE 49, PART 199, DRUG AND ALCOHOL TESTING, THE CONTRACTOR SHALL SUBMIT THEIR SUBSTANCE ABUSE PLAN TO NATIONAL COMPLIANCE MANAGEMENT SERVICE, INC. (NCMS) FOR REVIEW AND APPROVAL.
   NATIONAL COMPLIANCE MANAGEMENT SERVICE, INC.
   7 COMPOUND DRIVE
   HUTCHINSON, KANSAS 67502
   PHONE: (620) 669-0954
   FAX: (620) 669-8430
   www.nationalcompliance.com

5. ANY DEVIATIONS FROM THE PLANS AND/OR SPECIFICATIONS SHALL BE APPROVED IN WRITING BY ATMOS ENERGY PRIOR TO THE WORK TAKING PLACE. FAILURE TO DO SO MAY RESULT IN ALL WORK BEING STOPPED AND REJECTION OF THE WORK UNTIL ALL DEFICIENCIES ARE CORRECTED AND ACCEPTED BY ATMOS ENERGY.

6. PERFORM ALL WORK IN A SAFE, THOROUGH, AND WORKMAN-LIKE MANNER IN ACCORDANCE WITH THE CONSTRUCTION DOCUMENTS AND ALL APPLICABLE LOCAL, STATE, AND FEDERAL REGULATIONS.

7. THE CONTRACTOR SHALL HAVE AND FOLLOW AN OPERATOR QUALIFICATION (OQ) PLAN AND USE THE SERVICES OF AN APPROVED (OQ) ASSESSMENT PROVIDER TO ADMINISTER AND MANAGE THEIR TRAINING AND QUALIFICATION ASSESSMENT PROCESS.

8. THE FOLLOWING (OQ) ASSESSMENT PROVIDERS ARE APPROVED BY ATMOS ENERGY:

ENERGY WORLDNET, INC.	GAJESKE OQ SERVICES	MIDWEST ENERGY ASSOCIATION
(940) 626-1941	(972) 314-8100	(615) 289-9600 EXT 101
www.energyworldnet.com	www.gajeske.com	www.mldwestenergy.com

9. FOR A LIST OF CONTRACTORS CURRENTLY MEETING QUALIFICATIONS DESCRIBED BELOW, PLEASE CONTACT Abby Davis AT (615)771-8369

10. THE FOLLOWING OPERATOR QUALIFICATIONS REQUIRE CERTIFICATIONS TO BE CERTIFIED BY A THIRD PARTY: (1) WELDING OF STEEL PIPELINES AND (2) JOINING PLASTIC PIPE. THESE CERTIFICATIONS WILL BE ADMINISTERED AND PROVIDED A THIRD PARTY. TO SCHEDULE THE CERTIFICATIONS, CONTACT ATMOS ENERGY AT THE ADDRESS GIVEN ON SHEET U-6.

11. AS REQUIRED BY LAW, PRIOR TO CONSTRUCTION NOTIFY TENNESSEE 811, THE UNDERGROUND UTILITY NOTIFICATION CENTER FOR TENNESSEE (1-800-752-6007).

12. ALL MATERIAL SHALL BE APPROVED BY ATMOS ENERGY PRIOR TO INSTALLATION.

13. SEE ATMOS ENERGY "SPECIFICATIONS FOR CONTRACTORS" DATED DECEMBER 2015 OR LATEST REVISION FOR ADDITIONAL REQUIREMENTS. IT IS THE RESPONSIBILITY OF THE CONTRACTOR TO CONTACT THE ENGINEER FOR THE LATEST UPDATED SPECIFICATIONS FOR THE UTILITY.

14. REFERENCE THE SPECIFICATIONS FOR REQUIREMENTS ON CONSTRUCTION RECORDS KEEPING AND FACILITY LOCATING AIDES.

WELDING OF GAS PIPELINES

1. CONTRACTOR SHALL SUBMIT CREDENTIALS FOR THEIR NON-DESTRUCTIVE TESTING (NDT) SUBCONTRACTORS TO ATMOS ENERGY AT THE ADDRESS GIVEN ON SHEET U-6 PRIOR TO BEGINNING WORK.

2. ALL BUTT WELDS SHALL BE TESTED BY RADIOGRAPHIC EXAMINATION AND FILLET WELDS (e.g., TIE-INS) SHALL BE TESTED VIA MAGNETIC PARTICLE FLUX EXAMINATION. FABRICATOR TO PROVIDE PROTECTION FOR OPEN ENDS OF ASSEMBLIES.

3. ALL CONTRACTOR PERSONNEL (WELDERS) PERFORMING WELDS TO JOIN STEEL PIPE SHALL BE CERTIFIED IN ACCORDANCE WITH AMERICAN PETROLEUM INSTITUTE (API) STANDARD 1104 - WELDING OF PIPELINES AND RELATED FACILITIES. WELDING SPECIFICATIONS ARE AS FOLLOWS:
   A. BUTT WELDS: WPS-S62GA;
   B. FILLET WELDS: WPS-S43-1BH FOR IN-SERVICE WELDING IN ACCORDANCE WITH PROCEDURES OUTLINED IN API-1104, APPENDIX B

4. WELDED JOINTS SHALL BE SANDBLASTED PER THE NATIONAL ASSOCIATION OF CORROSION ENGINEERS (NACE) STANDARD NO. 2 SSPC-SP10, NEAR-WHITE BLAST CLEANING BY THE USE OF ABRASIVES. JOINTS SHALL BE COVERED USING A TWO-PART EPOXY APPLIED PER THE MANUFACTURER RECOMMENDATIONS, RECOMMENDATIONS AND THAT ARE COMPACTIABLE WITH THE PIPE COATING COATING SPECIFIED HEREIN.

5. TAPPING FITTINGS SHALL BE CLEANED WITH A POWER BRUSH, PRIMED WITH WAX TAPE PRIMER AND WRAPPED WITH WAX TAPE OR COVERED USING AN APPROVED TWO-PART EPOXY.

6. THOROUGHLY JEEP ALL BELOW GRADE PIPE WITH A MEDIUM VOLTAGE HOLIDAY DETECTOR ROUTINELY BEFORE AND AFTER LOWERING THE PIPE INTO THE TRENCH. LOCATE ANY HOLIDAYS AND PATCH WITH A MATERIAL COMPATIBLE WITH THE PIPE COATING AND RETEST.

7. SET THE HOLIDAY DETECTOR AT THE APPROPRIATE VOLTAGE TO BE VERIFIED BY THE CORROSION INSPECTOR. PRIOR TO USE EACH DAY, CHECK THE VOLTAGE WITH A VOLT METER.

8. ERW PIPE HAVING A LONGITUDINAL SEAM SHALL BE TURNED SO THAT THE LONG SEAM IS WITHIN THIRITY DEGREES FROM THE TOP CENTER. SUCCESSIVE JOINTS SHAL BE ROTATED TO AVOID ALIGNING THE LONG SEAMS IN ADJOINING JOINTS.

9. THIS PROJECT WILL BE 100-PERCENT X-RAY FOR STEEL PIPE WELDS. CONTRACTOR WILL BE REQUIRED TO COORDINATE WITH VISUAL WELDING INSPECTOR (VWI) IN PRODUCTION OF WELD MAPS FOR THE PROJECT IDENTIFYING HEAT NUMBERS AND ASSOCIATED WELD NUMBERS. A VISUAL WELDING FORM SHALL ALSO BE COMPLETED FOR EACH WELD AND LABELED WITH THE WELD NUMBER OR OTHER MARKING, THE VISUAL WELDING INSPECTOR SHALL BE RESPONSIBLE FOR THIS.

STATIC ELECTRIC DISCHARGE FOR PE PIPE

1. TAKE PRECAUTIONS TO REDUCE THE POTENTIAL FOR STATIC ELECTRIC DISCHARGES WHERE HAZARDOUS ATMOSPHERE'S MAY EXIST BY APPLYING AN ANTI-STATIC SOLUTION.

2. FOLLOW THE PRECAUTIONS RECOMMENDED BY THE AMERICAN GAS ASSOCIATION (AGA) IN THE LATEST EDITION OF THE 'PLASTIC PIPE MANUAL FOR GAS SERVICE.'

3. DO NOT VENT GAS USING UNDERGROUND PLASTIC PIPE OR TUBING. IF VENTING IS NECESSARY, VENT DOWN-WIND AT A LOCATION AWAY FROM PERSONNEL AND FLAMMABLE MATERIALS.

IT IS THE RESPONSIBILITY OF THE CONTRACTOR TO CONTACT THE ENGINEER FOR THE LATEST, UPDATED SPECIFICATIONS FOR THE UTILITY.

IT IS THE RESPONSIBILITY OF THE CONTRACTOR TO DOCUMENT ALL HDPE INSTALLATION WITH LOCUSVIEW.

TESTING, POLYETHYLENE PIPE:

- Prior to testing, the pipeline shall be cleaned by blowing pigs with compressed air through the pipeline to remove construction dirt, scale, and foreign material from the pipeline.
- TEST PRESSURE for POLYETHYLENE MAIN SHALL BE 150 (+25, -0) PSIG for EIGHT HOURS, PLUS A RECORDING CHART. The chart shall show the pressure increase, from zero to the test pressure, and the pressure decrease back to zero, after the test is judged successful.

TIE-INS TO EXISTING MAIN

PLEASE NOTE, THE GAS CONTRACTOR IS RESPONSIBLE FOR ALL TAPPING OPERATIONS.

- The tie-ins to the existing main SHALL BE DONE IN THE PRESENCE OF AN ATMOS INSPECTOR, WITHOUT EXCEPTION.
- The Atmos inspector is necessary to determine that all air and test medium is purged from the pipeline, and that no hazardous gas-air mixture is present.
- Atmos Energy will be responsible for turning the gas back on to individual customers. The contractor shall coordinate with the Atmos inspector to restore service in a safe, timely manner.

CATHODIC PROTECTION:

- Atmos Energy will install cathodic protection test stations, in coordination with the Contractor. The Contractor will contact Atmos Energy engineering department to schedule this work. In no event should the areas of test stations (as shown on the plans) be backfilled prior to the installation of the test stations.

DITCH:

- The pipe shall be laid on undisturbed or well compacted soil, not on clods or rocks. Where rock is encountered, it shall be removed for a distance of six inches (6") below the pipe. Suitable padding shall be placed for a depth of at least six inches (6") below the pipe.
- Where the natural backfill material is deemed injurious to the pipe, the pipe shall be padded with suitable padding to a depth of at least eighteen inches (18") above the pipe.
- Backfill material shall be free from large rocks and sharp rocks for at least the first eighteen inches (18") covering the pipe. When compacting backfill, special care must be exercised to prevent damage to the pipe. When heavy equipment, such as hydro-hammers and vehicle wheels, is used to compact backfill, a cushion of twenty-four inches (24") shall be provided.

PLEASE NOTE, THE NORMAL COVER FROM FINISHED GRADE FOR STEEL PIPE IS FOUR FEET (4').
THREE FEET (3') FOR PE PIPE. CONTRACTOR SHALL COORDINATE GRADE CUTS WITH THE ROADWAY SURVEYOR.

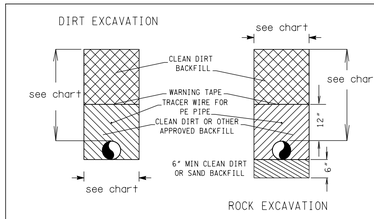

MINIMUM TRENCH WIDTH per PIPE SIZE		
PIPE SIZE	DIRT	ROCK
2" or less	6"	12"
4"	8"	18"
6"/8"	12"	24"

MINIMUM COVER	
PIPE	COVER
PE	36"
STEEL	48"

PROJECT-SPECIFIC TRENCH - 2", 4", 6", & 8" MAINS

NOTE: EXCAVATIONS IN ASPHALT OR CONCRETE REQUIRE 100 % STONE BACKFILL TO WITHIN 4 INCHES OF GRADE. CONCRETE AND ASPHALT CAN THEN BE RESTORED.

VOID FOR BIDDING
FOR INFORMATION ONLY

SEALED BY

HISTORIC FRANKLIN TENNESSEE

CITY OF FRANKLIN
ENGINEERING DEPARTMENT

GAS RELOCATION GENERAL NOTES

7/30/2020 8:31:19 AM
Y:\Nashville\16019000S\16019033.00\Eng_Docs\Roadway\UTILITY 006.sht

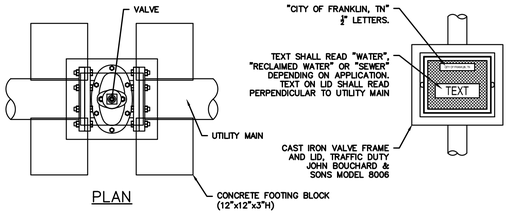

PLAN

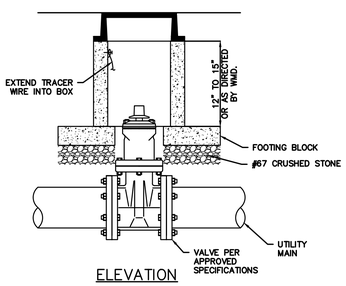

ELEVATION

NOTES:
1) FOUR (4) CONCRETE BLOCKS ARE TO BE PLACED UNDER EACH CORNER OF THE VALVE BOX AS SHOWN.
2) CONCRETE SHALL BE 4,000 PSI @ 28 DAYS REINFORCED WITH WELDED WIRE MESH.
3) STRUCTURE SHALL CONFORM TO ASTM C858.
4) ALL WATER VALVES SHALL BE LEFT TURN OPEN AND RECLAIMED WATER VALVES SHALL BE RIGHT TURN OPEN.

CONCRETE VALVE BOX			DWG. NO.
CITY OF FRANKLIN	WATER MANAGEMENT DIRECTOR:	DATE: 10/16/2019	G-2
NOT TO SCALE			

RECLAIMED WATER MARKER LABEL:

CAUTION – RECLAIMED WATER PIPELINE
NON–POTABLE WATER
DO NOT DRINK

CITY OF FRANKLIN WATER MANAGEMENT
DEPARTMENT (615) 794–4554

MARKER COLOR: PURPLE

SANITARY SEWER MARKER LABEL:

CAUTION – SANITARY SEWER PIPELINE
DO NOT DRINK

CITY OF FRANKLIN WATER MANAGEMENT
DEPARTMENT (615) 794–4554

MARKER COLOR: GREEN

DRINKING WATER LABEL:

CAUTION – WATER PIPELINE

CITY OF FRANKLIN WATER MANAGEMENT
DEPARTMENT (615) 794–4554

MARKER COLOR: BLUE

NOTES:
1) MARKER SHALL BE INSTALLED DIRECTLY BEHIND STRUCTURE WITH LABEL FACING ROADWAY.
2) MARKERS TO BE INSTALLED AS INDICATED ON PLANS OR WHERE DIRECTED BY OWNER.
3) MARKER SHALL BE CONSTRUCTED OF DURABLE, UV RESISTANT, COMPOSITE MATERIAL.

UTILITY IDENTIFICATION MARKER			DWG. NO.
CITY OF FRANKLIN	WATER MANAGEMENT DIRECTOR:	DATE: 10/16/2019	G-4
NOT TO SCALE			

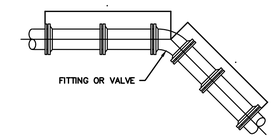

NOTES:
1) RESTRAINED JOINTS SHALL BE PROVIDED ON EACH SIDE OF ALL VERTICAL OR HORIZONTAL BENDS, TEES, DEAD ENDS, REDUCERS, AND VALVES.
2) MAXIMUM LENGTHS OF PIPE SHALL BE USED WITHIN RESTRAINED SECTIONS.
3) LENGTH OF RESTRAINED PIPE IS BASED ON THE FOLLOWING ASSUMPTIONS USING THE EBAA IRON CALCULATOR. IF OTHER CONDITIONS ARE ENCOUNTERED, THE LENGTH OF RESTRAINED PIPE SHALL BE ADJUSTED ACCORDINGLY. ENGINEER SHALL SUPPLY CALCULATIONS TO THE CITY OF FRANKLIN FOR REVIEW.
   A. DESIGN SOIL TYPE: ML (WORST CASE)
   B. SAFETY FACTOR: 1.5
   C. TRENCH TYPE: 3
   D. DEPTH OF BURY: 3 FEET
   E. TEST PRESSURE: 200 PSI
   F. REDUCERS BASED ON A REDUCTION OF ONE PIPE SIZE SMALLER

PVC PIPE									
LENGTH (L) OF PIPE TO BE RESTRAINED ON EACH SIDE OF FITTING OR VALVE (FT)									
	HORIZONTAL ELBOWS				VERTICAL ELBOWS			REDUCERS	TEES, DEAD ENDS, VALVES
PIPE DIAMETER	11 ¼	22 ½	45	90	11 ¼	22 ½	45		
4"	3	6	12	29	7	14	29	23	70
6"	4	8	17	41	10	20	41	51	99
8"	6	11	22	53	13	26	54	54	129
12"	8	15	31	73	18	37	76	97	182
16"	10	19	39	93	23	47	97	99	233
20"	11	22	46	111	28	56	118	99	282
24"	13	26	53	127	33	66	136	98	328

RESTRAINED JOINT TABLE - PVC			DWG. NO.
CITY OF FRANKLIN	WATER MANAGEMENT DIRECTOR:	DATE: 10/16/2019	G-5
NOT TO SCALE			

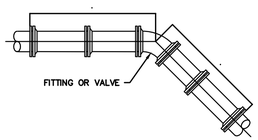

NOTES:
1) RESTRAINED JOINTS SHALL BE PROVIDED ON EACH SIDE OF ALL VERTICAL OR HORIZONTAL BENDS, TEES, DEAD ENDS, REDUCERS, AND VALVES.
2) MAXIMUM LENGTHS OF PIPE SHALL BE USED WITHIN RESTRAINED SECTIONS.
3) LENGTH OF RESTRAINED PIPE IS BASED ON THE FOLLOWING ASSUMPTIONS USING DIPRA THRUST RESTRAINT DESIGN FOR DUCTILE IRON PIPE. IF OTHER CONDITIONS ARE ENCOUNTERED, THE LENGTH OF RESTRAINED PIPE SHALL BE ADJUSTED ACCORDINGLY. ENGINEER SHALL SUPPLY CALCULATIONS TO THE CITY OF FRANKLIN FOR REVIEW.
   A. DESIGN SOIL TYPE: SILT 1 (WORST CASE)
   B. SAFETY FACTOR: 1.5
   C. TRENCH TYPE: 3 WITH 4–INCH MINIMUM BEDDING (EXCEPT WHERE NOTED)
   D. DEPTH OF BURY: 3 FEET
   E. TEST PRESSURE: 200 PSI
   F. REDUCERS BASED ON A REDUCTION OF ONE PIPE SIZE SMALLER
   G. NON–POLY WRAPPED

DIP PIPE									
LENGTH (L) OF PIPE TO BE RESTRAINED ON EACH SIDE OF FITTING OR VALVE (FT)									
	HORIZONTAL ELBOWS				VERTICAL ELBOWS			REDUCERS	TEES, DEAD ENDS, VALVES
PIPE DIAMETER	11 ¼	22 ½	45	90	11 ¼	22 ½	45		
4"	3(6)	7(12)	14(24)	34(58)	6(9)	12(18)	24(37)	19(29)	58(90)
6"	5(8)	9(16)	20(33)	47(81)	8(12)	16(25)	34(52)	42(65)	81(126)
8"	6(10)	12(21)	26(44)	62(106)	11(16)	21(33)	44(68)	45(69)	107(165)
12"	8(15)	17(29)	36(61)	86(147)	15(23)	30(46)	62(96)	79(123)	150(231)
16"	11(18)	22(37)	45(77)	109(187)	19(29)	38(59)	79(122)	81(125)	191(295)
20"	13(22)	26(44)	54(93)	131(224)	23(35)	46(71)	95(147)	81(125)	230(355)
24"	15(25)	30(51)	63(107)	151(259)	26(41)	53(82)	111(171)	80(124)	268(414)

LENGTHS IN PARENTHESES ( ) REPRESENT LINEAL FEET TO BE RESTRAINED WHEN PIPE IS PLACED DIRECTLY ON UNDISTURBED SUBGRADE WITHOUT BEDDING (FLAT BOTTOM TRENCH TYPE 2)

RESTRAINED JOINT TABLE - DIP			DWG. NO.
CITY OF FRANKLIN	WATER MANAGEMENT DIRECTOR:	DATE: 10/16/2019	G-6
NOT TO SCALE			

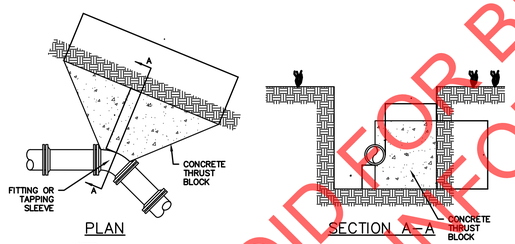

PLAN SECTION A–A

NOTES:
1) THRUST BLOCKS TO BE PLACED AGAINST SUITABLE, UNDISTURBED EARTH, AS APPROVED BY THE WATER MANAGEMENT DEPARTMENT.
2) CONCRETE STRENGTH f'c = 3,000 PSI AT 28 DAYS.
3) ALL DIMENSIONS ARE MINIMUMS EXCEPT WHERE LARGER DIMENSION WILL INTERFERE WITH PIPE JOINTS OR BOLT REMOVAL ON FITTINGS. IN THESE CASES, SUBMIT REVISED DRAWINGS TO THE WATER MANAGEMENT DEPARTMENT.
4) VERTICAL BENDS REQUIRE SEPARATE DESIGN AND DETAIL BY ENGINEER.
5) THRUST BLOCKING SHOWN IS BASED ON THE FOLLOWING ASSUMPTIONS. IF OTHER CONDITIONS ARE ENCOUNTERED, SPECIAL DESIGN IS REQUIRED. ENGINEER SHALL SUPPLY CALCULATIONS TO THE CITY OF FRANKLIN FOR REVIEW.
   A. BEARING AGAINST SOFT CLAY, SILT, OR ORGANIC SOILS NOT PERMITTED.
   B. GROUNDWATER TABLE ELEVATION LOCATED BELOW BOTTOM OF BLOCK.
   C. SAFETY FACTOR: 1.5
   D. DEPTH OF BURY: 3 FEET
   E. TEST PRESSURE: 200 PSI
   F. HORIZ. SOIL BEARING: 2,000 PSF

THRUST BLOCK DIMENSIONS										
PIPE DIAMETER		HORIZONTAL ELBOWS							TEES, DEAD ENDS, TAPPING SLEEVES	
		22 ½		45		90				
	D	L	H	L	H	L	H		L	H
4"	1'–6"	1'–6"	1'–6"	1'–6"	1'–6"	2'–0"	1'–6"		1'–6"	1'–6"
6"	1'–6"	2'–0"	1'–6"	2'–6"	1'–6"	3'–0"	2'–0"		3'–0"	1'–6"
8"	1'–6"	2'–0"	1'–6"	3'–0"	2'–0"	4'–6"	2'–6"		4'–0"	2'–0"
12"	2'–0"	4'–0"	2'–0"	5'–0"	2'–6"	7'–0"	3'–6"		6'–0"	3'–0"
16"	2'–0"	5'–0"	2'–6"	7'–0"	3'–6"	10'–0"	4'–6"		8'–0"	4'–0"

THRUST BLOCK TABLE (NON-RESTRAINED JOINTS)			DWG. NO.
CITY OF FRANKLIN	WATER MANAGEMENT DIRECTOR:	DATE: 10/16/2019	G-7
NOT TO SCALE			

NOTE: 36" MIN. COVER FOR ALL UTILITIES UNLESS OTHERWISE APPROVED

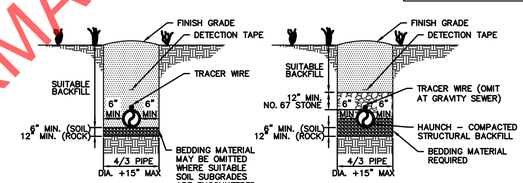

DIP PRESSURE PIPE OTHER PIPE

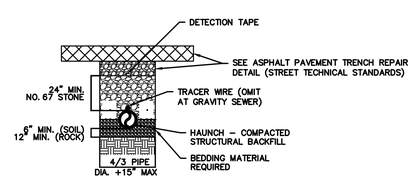

ALL PIPE UNDER PAVEMENT

NOTES:
1) ALL SUITABLE BACKFILL MATERIAL AND SUBGRADES SHALL BE APPROVED BY THE WATER MANAGEMENT DEPT.
2) ALL ROCK LOOSENED SHALL BE REMOVED; VOIDS CREATED BY SUCH REMOVAL SHALL BE FILLED WITH CRUSHED STONE.
3) REMOVE STONE FOR PIPE BELLS TO PROVIDE FULL CONTACT OF BEDDING.
4) BACKFILL SHALL BE TAMPED IN 6" LIFTS.
5) ACHIEVE 95% COMPACTION ON ALL BACKFILL.
6) NO ROCKS 6" IN DIAMETER OR GREATER ALLOWED IN SUITABLE BACKFILL.
7) PROVIDE STONE BACKFILL FOR PIPING WITHIN DRIVEWAYS, ROADWAYS AND PARKING AREAS UNLESS OTHERWISE APPROVED. SEE ASPHALT PAVEMENT TRENCH REPAIR DETAIL WHEN IN PAVED AREAS.
8) TRENCH DEWATERING SHALL BE DONE IN ACCORDANCE WITH TDOT STD DRAWING EC–STR–1 AND EC–STR–2
9) TRACER WIRE SHALL BE COPPER CLAD, 12 GA. MIN., WITH COLOR–CODED 30 MIL HDPE INSULATED JACKET. PROVIDE WATERPROOF GREASE FILLED CONNECTIONS AT JUNCTIONS. TRACER WIRE SYSTEM SHALL BE TESTED FOR FUNCTIONALITY PRIOR TO ACCEPTANCE. TRACER WIRE SHALL NOT BE USED FOR GRAVITY SEWER LINES.
10) PROVIDE CHECK DAMS AT 50'–0" O.C. MINIMUM, UNLESS OTHERWISE DIRECTED BY WMD.

UTILITY BEDDING AND BACKFILL DETAIL			DWG. NO.
CITY OF FRANKLIN	WATER MANAGEMENT DIRECTOR:	DATE: 10/16/2019	G-8
NOT TO SCALE			

NOT FOR BIDDING
FOR INFORMATION ONLY

SEALED BY

CITY OF FRANKLIN, TN

WATER AND RECLAIMED WATER STANDARD DRAWINGS

CITY OF FRANKLIN	YEAR	SHEET NO.
	2020	U9

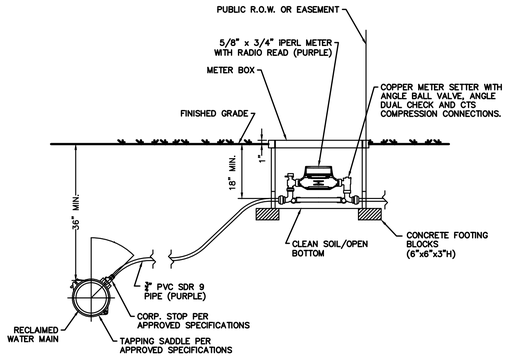

METER SIZE	SIGMA HDPE RAVEN METER BOX	METER LID	McDONALD COPPER METER SETTER
¾"	RMB132418-SW-W 13"X24"X18"	SIGMA RMB-PURPLE LID	770-2-WD-QQ 33
1"	RMB132418-SW-W 13"X24"X18"	SIGMA RMB – PURPLE LID	770-4-WDQQ 4
1 ½"	RMB173018-SW	SIGMA LC 1730T-D – PURPLE	720-609-WDFF-660
2"	RMB173018-SW	SIGMA LC 1730T-D – PURPLE	720-710-KDFF-770

NOTES:
1) MINIMUM TRENCH WIDTH ON SERVICE SHALL BE 2 FEET.
2) INSTALL THE METER BOX AS NEAR THE PROPERTY LINE AS POSSIBLE WITHIN THE PUBLIC RIGHT-OF-WAY OR PUBLIC EASEMENT. METER BOX SHALL BE SET PLUMB APPROXIMATELY 1" ABOVE PROPOSED GRADE AND SUCH THAT SURFACE DRAINAGE WILL NOT ENTER IT.
3) METER BOX AND SETTER TO BE FURNISHED AND INSTALLED BY CONTRACTOR.
4) METER TO BE FURNISHED AND INSTALLED BY THE CITY OF FRANKLIN.
5) MINIMUM SERVICE LINE COVER SHALL BE 36" BELOW FINISHED GRADE UNDER ROADWAYS, 30" IN UNPAVED AREAS, AND 18" AT SERVICE BOX.
6) IF ASSEMBLY IS TO BE INSTALLED IN TRAFFIC AREA, BOX AND COVER TO BE TRAFFIC BEARING AS APPROVED BY THE CITY OF FRANKLIN.

HISTORIC FRANKLIN TENNESSEE	3/4" RECLAIMED WATER SERVICE ASSEMBLY		DWG. NO. RW-1
CITY OF FRANKLIN	WATER MANAGEMENT DIRECTOR:	DATE: 10/16/2019	
NOT TO SCALE			

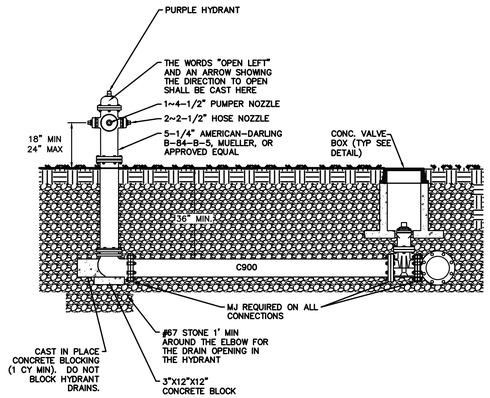

NOTES:
1) MAINTAIN 5' CLEARANCE FROM TREES, WALLS, DRIVEWAYS, POLES, ETC.

HISTORIC FRANKLIN TENNESSEE	RECLAIMED WATER FIRE HYDRANT SETTING		DWG. NO. RW-3
CITY OF FRANKLIN	WATER MANAGEMENT DIRECTOR:	DATE: 10/16/2019	
NOT TO SCALE			

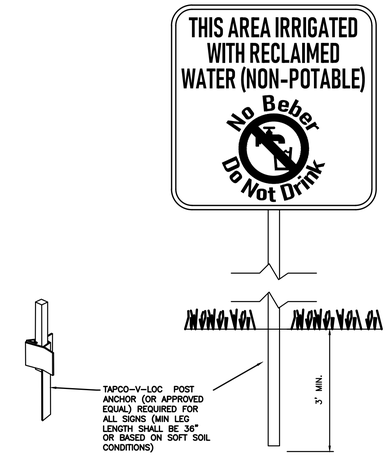

NOTES:
1) SIGNS SHALL BE POSTED IN ALL PUBLIC AREAS AND COMMON SPACE IRRIGATED BY RECLAIMED WATER
2) SIGN SHALL BE 18"X18" MIN. WITH 0.080 GAUGE ALUMINUM. ALL REFLECTIVE MATERIALS MUST QUALIFY AS HIGH INTENSITY PRISMATIC GRADE AND HAVE A MINIMUM 7-YEAR MATERIALS WARRANTY.
3) SIGN SHALL BE ANCHORED WITH A GALVANIZED 2"X2" KNOCKOUT SQUARE STEEL TUBE (12 GAGE)
4) SHOP DRAWINGS SHALL BE SUBMITTED TO WATER MANAGEMENT FOR REVIEW AND APPROVAL PRIOR TO ORDERING/INSTALLATION.
5) HEIGHT OF SIGN WILL DEPEND ON LOCATION AND SURROUNDING LANDSCAPE PLANT TYPES. THE SIGN SHALL VISIBLE TO THE PUBLIC AND MEET ADA HIGHT REQUIREMENTS WHEN ADJACENT TO PEDESTRIAN ACCESSIBLE AREAS.

HISTORIC FRANKLIN TENNESSEE	RECLAIMED WATER IRRIGATION SIGN		DWG. NO. RW-4
CITY OF FRANKLIN	WATER MANAGEMENT DIRECTOR:	DATE: 10/16/2019	
NOT TO SCALE			

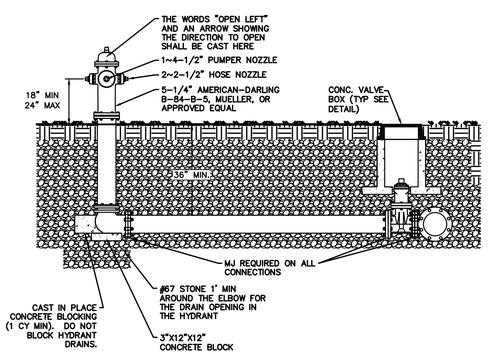

NOTES:
1) MAINTAIN 5' CLEARANCE FROM TREES, WALLS, DRIVEWAYS, POLES, ETC.

HISTORIC FRANKLIN TENNESSEE	FIRE HYDRANT SETTING		DWG. NO. W-9
CITY OF FRANKLIN	WATER MANAGEMENT DIRECTOR:	DATE: 10/16/2019	
NOT TO SCALE			

VOID FOR BIDDING
FOR INFORMATION ONLY

SEALED BY

CITY OF FRANKLIN, TN

WATER AND RECLAIMED WATER STANDARD DRAWINGS

TYPE	YEAR	PROJECT NO.	SHEET NO.
CONST.	2020	COF# 2019-0098	U2-1

SEE ROADWAY PLANS FOR ALL GENERAL NOTES

SANITARY SEWER				
(36)	SS1	24" DIP CL 350 w/Protecto 401 Lining Gravity Sewer	LF	529
(36)	SS2	30" DIP CL 350 w/Protecto 401 Lining Gravity Sewer	LF	527
(36)	SS3	30" Restrained Joint DIP CL 350 w/Protecto 401 Lining Gravity Sewer in 48" Steel Casing Pipe (Open Cut) (STA 6+75.00 - STA 9+26.00)	LF	251
(36)	SS4	60" Manhole, 0' – 6' Depth	EA	5
(36)	SS5	Additional Depth for 60" Diameter Sanitary Sewer Manhole	VF	97
(36)	SS6	Additional Payment for Watertight Frame and Cover	EA	5
(36)	SS7	Manhole Vent Assembly (w/Vent Check Valve)	EA	1
(36)	SS8	Connect 30" Gravity Sanitary Sewer to Existing Manholes (EX3)	EA	1
(36)	SS9	Connect Manhole to Existing 24" Gravity Sanitary Sewer (MHA1 and MHB1)	EA	2
(36)	SS10	Concrete Check Dam (Sanitary Sewer Main Line)	EA	5
(36)	SS11	Cut & Capt/Plug 24" Existing Sanitary Sewer Main	EA	2
(36)	SS12	Flowable Fill Existing Sanitary Sewer and MH (Abandon Existing Sewer Manhole (EX6) and Sanitary Sewer Main (B1-EX4)	CY	150
(36)	SS13	Removal of 24" Sanitary Sewer Main (Between PROPOSED MHA1 and EX 3)	LF	778
(36)	SS14	Removal of Existing Manhole (EX 4, EX20 and EX21)	EA	3
(36)	SS15	Over Depth Excavation and Backfill W/Crushed Stone (Within the Utility Trench - As Directed by the Engineer)	CY	100
(36)	SS16	Sewer Television Inspection of New Gravity Sewer	LF	1,307
(36)	SS17	Sewer Flow Control	LS	1
FOOTNOTES:				
(36)	See Special Provision Regarding Utility Measurement and Payment dated June 1, 2020			

VOID FOR BIDDING
FOR INFORMATION ONLY

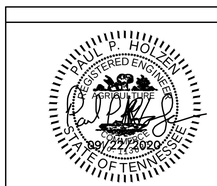

CITY OF FRANKLIN
ENGINEERING DEPARTMENT

GENERAL NOTES AND QUANTITIES

TYPE	YEAR	PROJECT NO.	SHEET NO.
CONST.	2020	COF# 2019-0098	U2-2

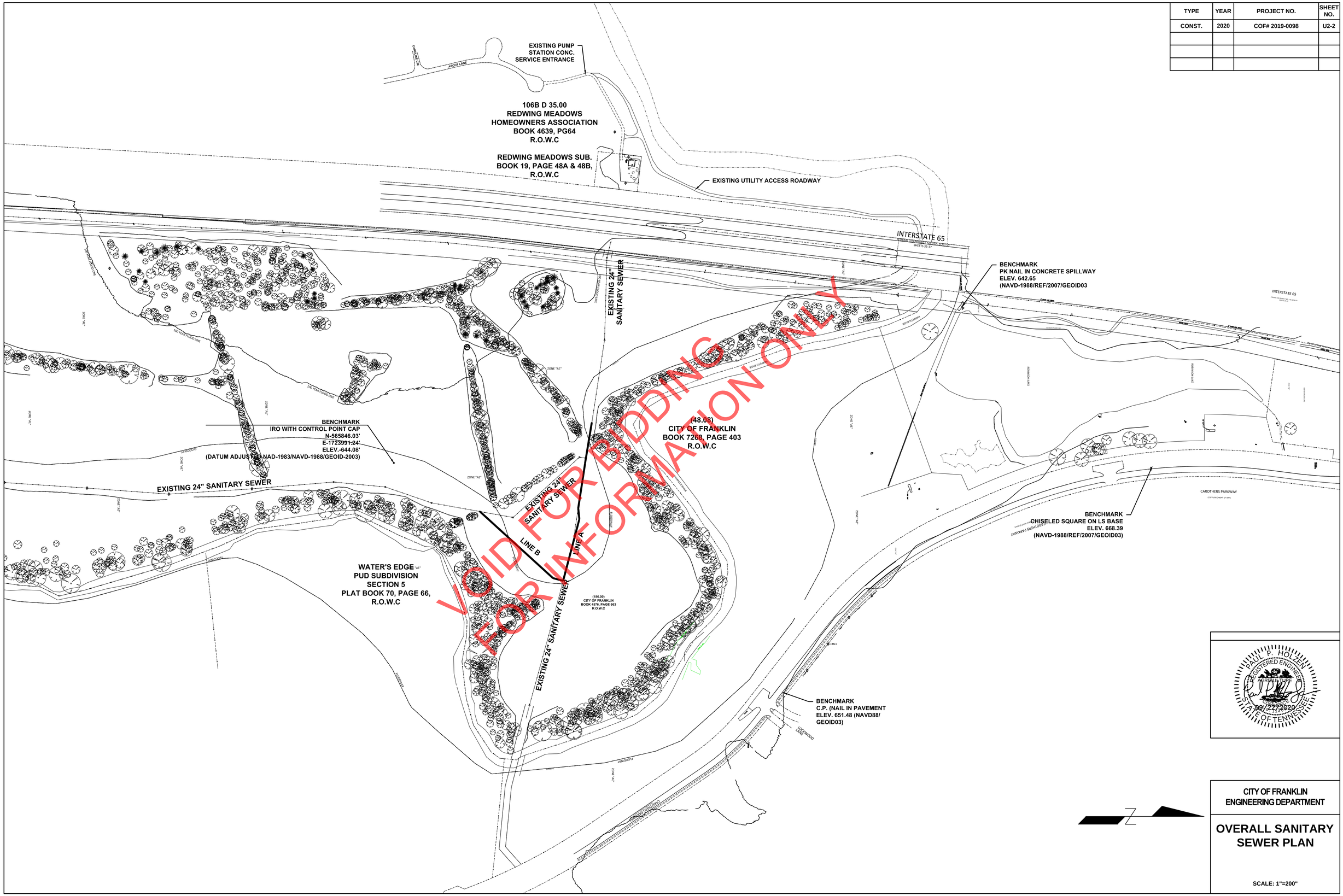

PAUL P. HOLZEN
REGISTERED ENGINEER
AGRICULTURE
09/21/2020
STATE OF TENNESSEE

CITY OF FRANKLIN
ENGINEERING DEPARTMENT

OVERALL SANITARY SEWER PLAN

SCALE: 1"=200"

TYPE	YEAR	PROJECT NO.	SHEET NO.
CONST.	2020	COF# 2019-0098	U2-3

PAUL P. HOLLEN
REGISTERED ENGINEER
SIGNATURE
09/22/2020
STATE OF TENNESSEE

CITY OF FRANKLIN
ENGINEERING DEPARTMENT

EXISTING CONDITIONS

SCALE: 1"=50"

TYPE	YEAR	PROJECT NO.	SHEET NO.
CONST.	2020	COF# 2019-0098	U2-4

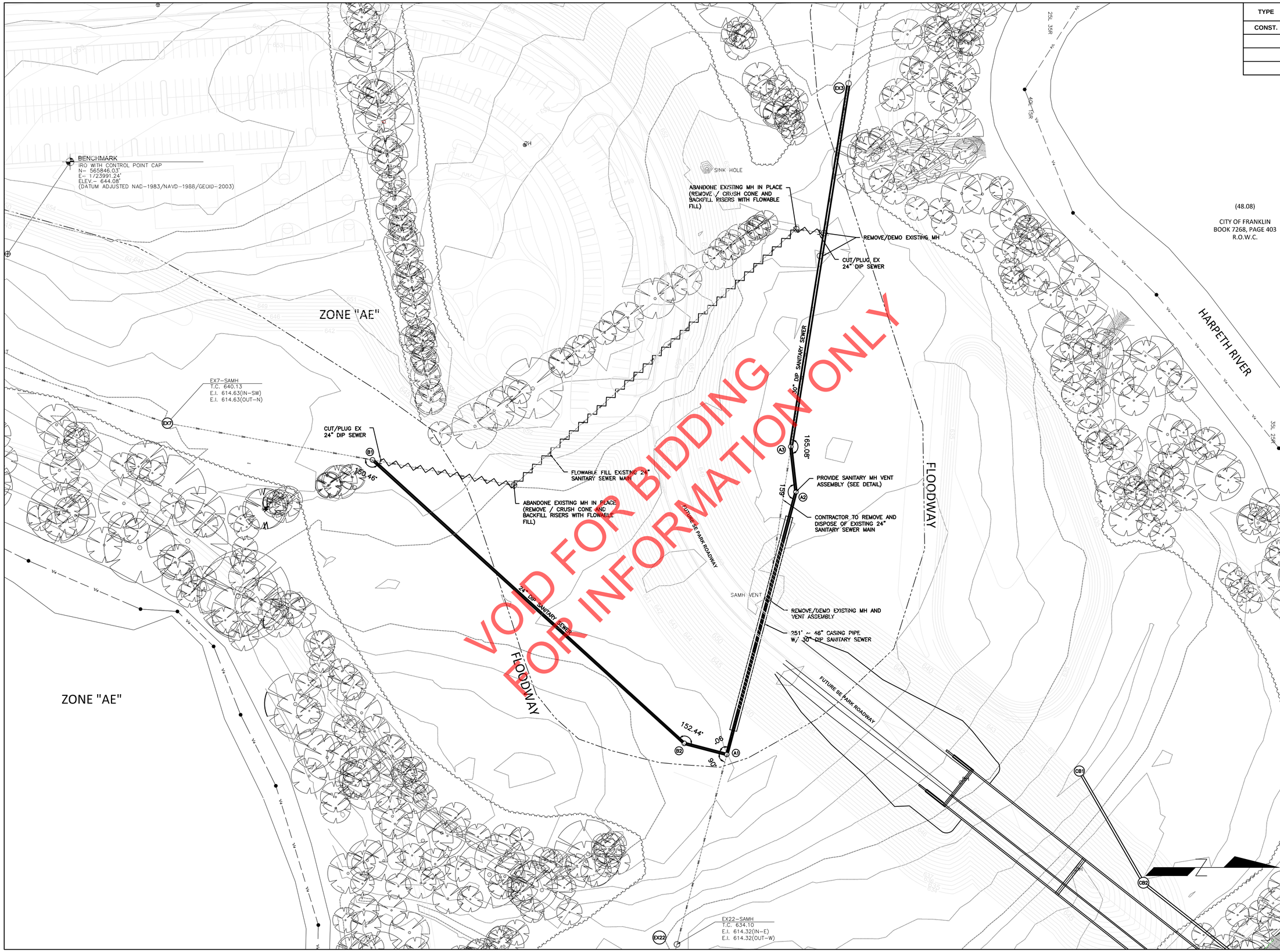

PAUL P. HOLEN
REGISTERED ENGINEER
AGRICULTURE
09/22/2020
STATE OF TENNESSEE

CITY OF FRANKLIN
ENGINEERING DEPARTMENT

PROPOSED SANITARY SEWER LAYOUT

SCALE: 1"=50"

TYPE	YEAR	PROJECT NO.	SHEET NO.
CONST.	2020	COF# 2019-0098	U2-5

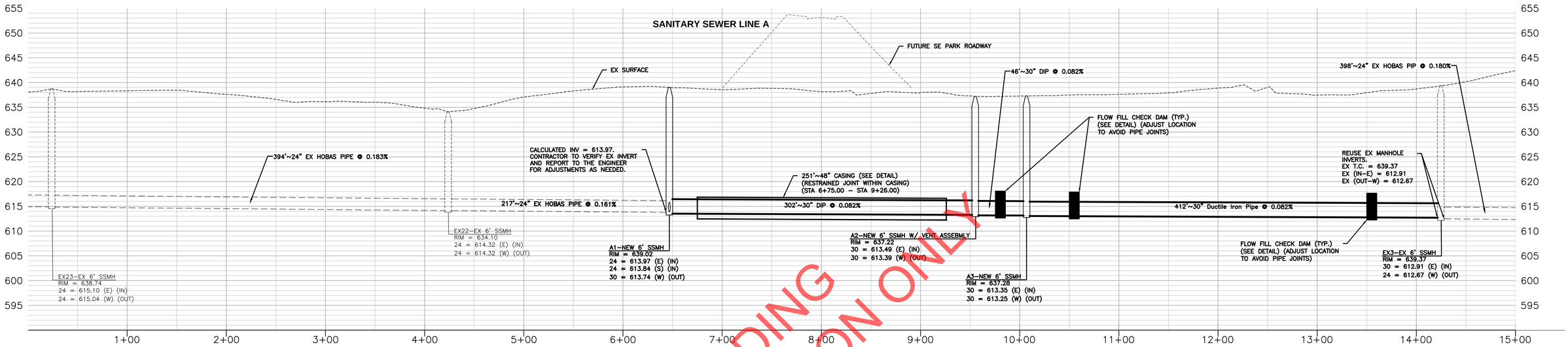

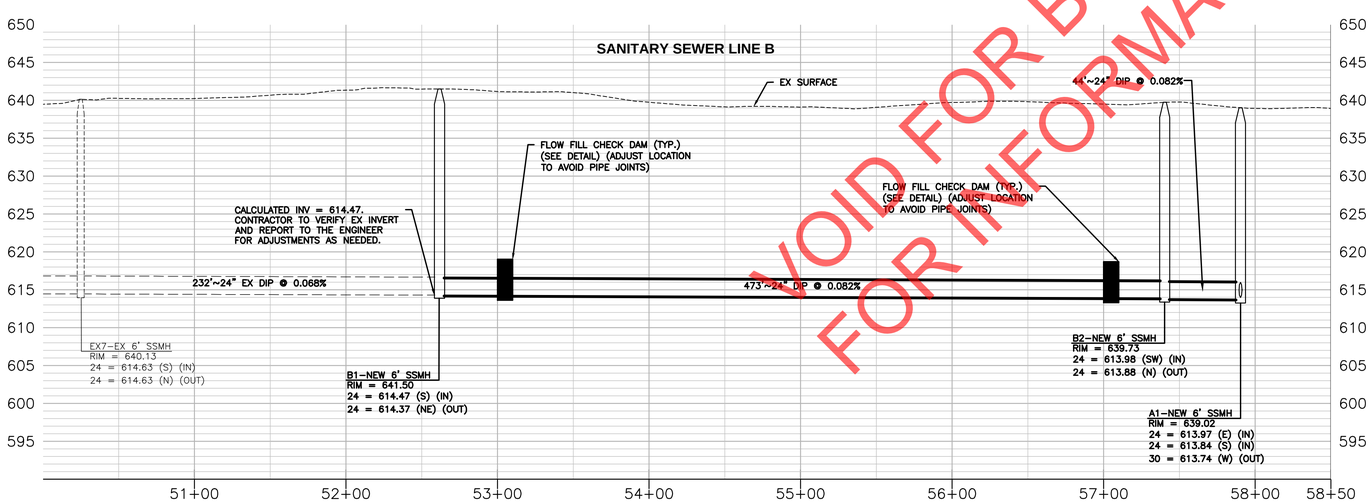

VOID FOR BIDDING
FOR INFORMATION ONLY

CITY OF FRANKLIN
ENGINEERING DEPARTMENT

SANITARY SEWER PROFILE

SCALE: 1"=50"

TYPE	YEAR	PROJECT NO.	SHEET NO.
CONST.	2020	COF# 2019-0098	U2-6

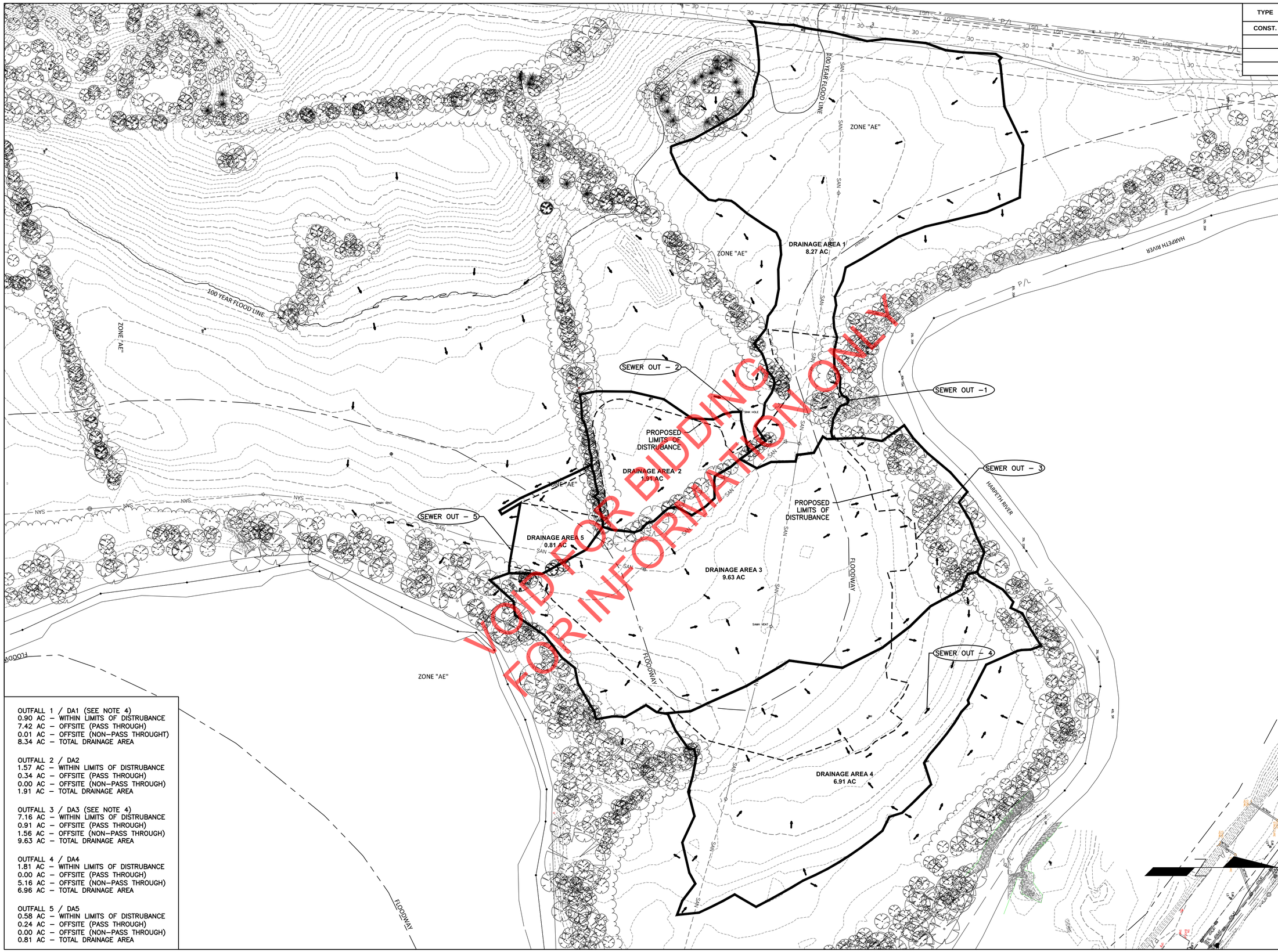

OUTFALL 1 / DA1 (SEE NOTE 4)
0.90 AC – WITHIN LIMITS OF DISTRUBANCE
7.42 AC – OFFSITE (PASS THROUGH)
0.01 AC – OFFSITE (NON–PASS THROUGHT)
8.34 AC – TOTAL DRAINAGE AREA

OUTFALL 2 / DA2
1.57 AC – WITHIN LIMITS OF DISTRUBANCE
0.34 AC – OFFSITE (PASS THROUGH)
0.00 AC – OFFSITE (NON–PASS THROUGH)
1.91 AC – TOTAL DRAINAGE AREA

OUTFALL 3 / DA3 (SEE NOTE 4)
7.16 AC – WITHIN LIMITS OF DISTRUBANCE
0.91 AC – OFFSITE (PASS THROUGH)
1.56 AC – OFFSITE (NON–PASS THROUGH)
9.63 AC – TOTAL DRAINAGE AREA

OUTFALL 4 / DA4
1.81 AC – WITHIN LIMITS OF DISTRUBANCE
0.00 AC – OFFSITE (PASS THROUGH)
5.16 AC – OFFSITE (NON–PASS THROUGH)
6.96 AC – TOTAL DRAINAGE AREA

OUTFALL 5 / DA5
0.58 AC – WITHIN LIMITS OF DISTRUBANCE
0.24 AC – OFFSITE (PASS THROUGH)
0.00 AC – OFFSITE (NON–PASS THROUGH)
0.81 AC – TOTAL DRAINAGE AREA

GENERAL NOTES:

1) EPSC'S PROPOSED FOR THE SITE HAVE BEEN DESIGEND TO CONTROL STORM RUNOFF GENERATED BY A 5–YEAR. 24 HOUR STORM EVENT

2) TOTAL SITE DISTURBANCE = 12.02 AC

3) SEE ROADWAY PLANS FOR ESTIAMTED QUANTITIES AND GENERAL NOTES.

4) ADDITIONAL EPSC MEASURES HAVE BEEN INCLUDED IN THE DESIGN IN–LIEU OF PROVIDING A SEDIMENT BASIN FOR DRAINAGE AREA 1 AND 3. THE MAJORITY OF THE STORMWATER, WITHIN THE LOD AND PASS THROUGH, WILL BE CAPTURED BY THE OPEN SANITARY SEWER TRENCH AND DEWATERED IN THE LARGE DEWATERING STRUCTURE AS SHOWN ON THE PHASE 1 EPSC PLAN.

PAUL P. HOLZEN
REGISTERED ENGINEER
ARCHITECTURE
STATE OF TENNESSEE
09/27/2020

CITY OF FRANKLIN
ENGINEERING DEPARTMENT

SANITARY SEWER RELOCATION EPSC DRAINAGE MAP

SCALE: 1"=100"

TYPE	YEAR	PROJECT NO.	SHEET NO.
CONST.	2020	COF# 2019-0098	U2-7

GENERAL NOTES:
1) EPSC'S PROPOSED FOR THE SITE HAVE BEEN DESIGEND TO CONTROL STORM RUNOFF GENERATED BY A 5–YEAR. 24 HOUR STORM EVENT

2) TOTAL SITE DISTURBANCE = 12.02 AC

3) SEE ROADWAY PLANS FOR ESTIAMTED QUANTITIES AND GENERAL NOTES.

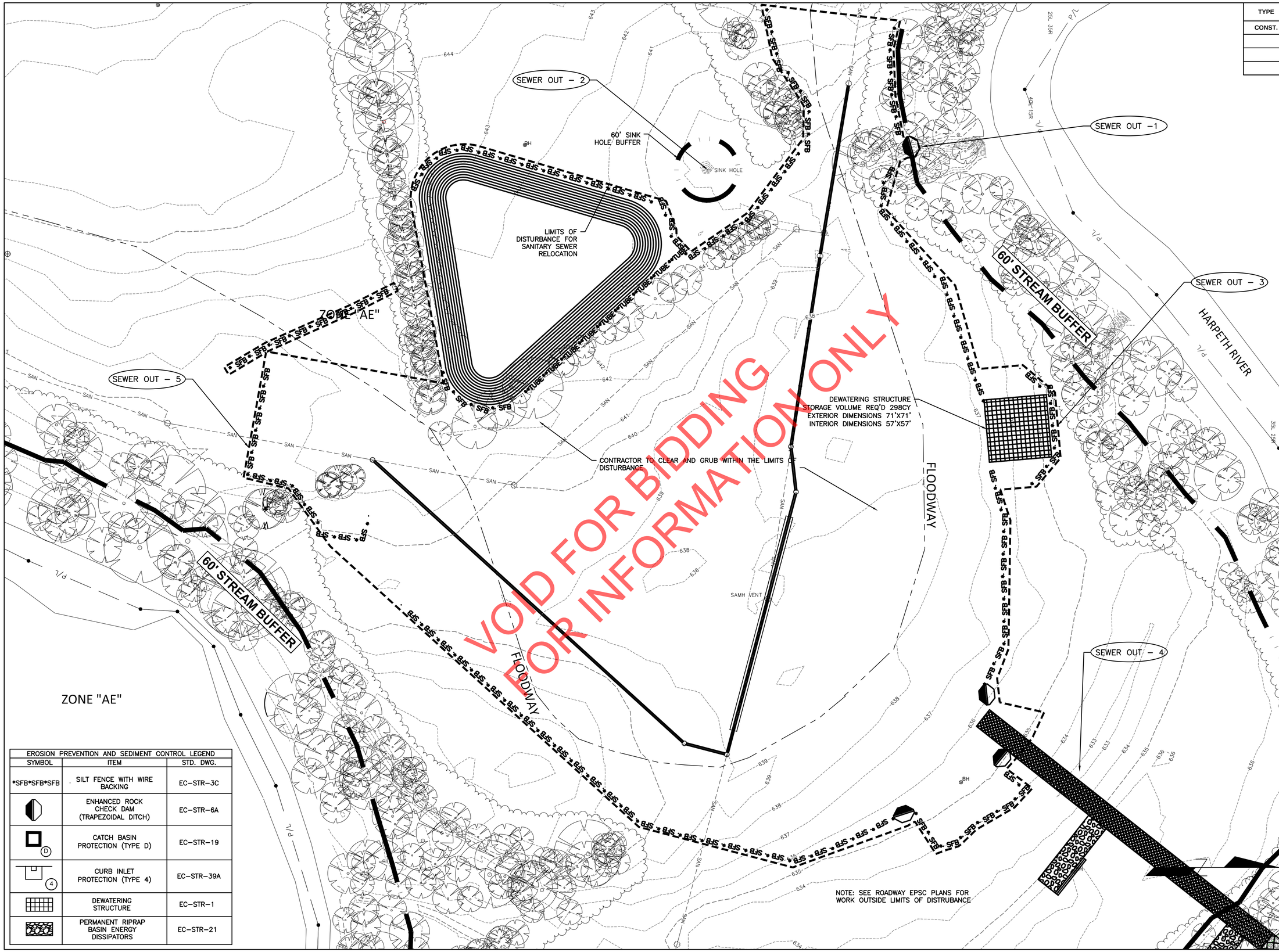

EROSION PREVENTION AND SEDIMENT CONTROL LEGEND		
SYMBOL	ITEM	STD. DWG.
*SFB*SFB*SFB	SILT FENCE WITH WIRE BACKING	EC–STR–3C
	ENHANCED ROCK CHECK DAM (TRAPEZOIDAL DITCH)	EC–STR–6A
D	CATCH BASIN PROTECTION (TYPE D)	EC–STR–19
4	CURB INLET PROTECTION (TYPE 4)	EC–STR–39A
	DEWATERING STRUCTURE	EC–STR–1
	PERMANENT RIPRAP BASIN ENERGY DISSIPATORS	EC–STR–21

PAUL P. HOLDEN
REGISTERED ENGINEER
No. 109921
7/29/2020
STATE OF TENNESSEE

STAGE 1

CITY OF FRANKLIN
ENGINEERING DEPARTMENT

SEWER RELOCATION EPSC LAYOUT

SCALE: 1"=50'

TYPE	YEAR	PROJECT NO.	SHEET NO.
CONST.	2020	COF# 2019-0098	U2-8

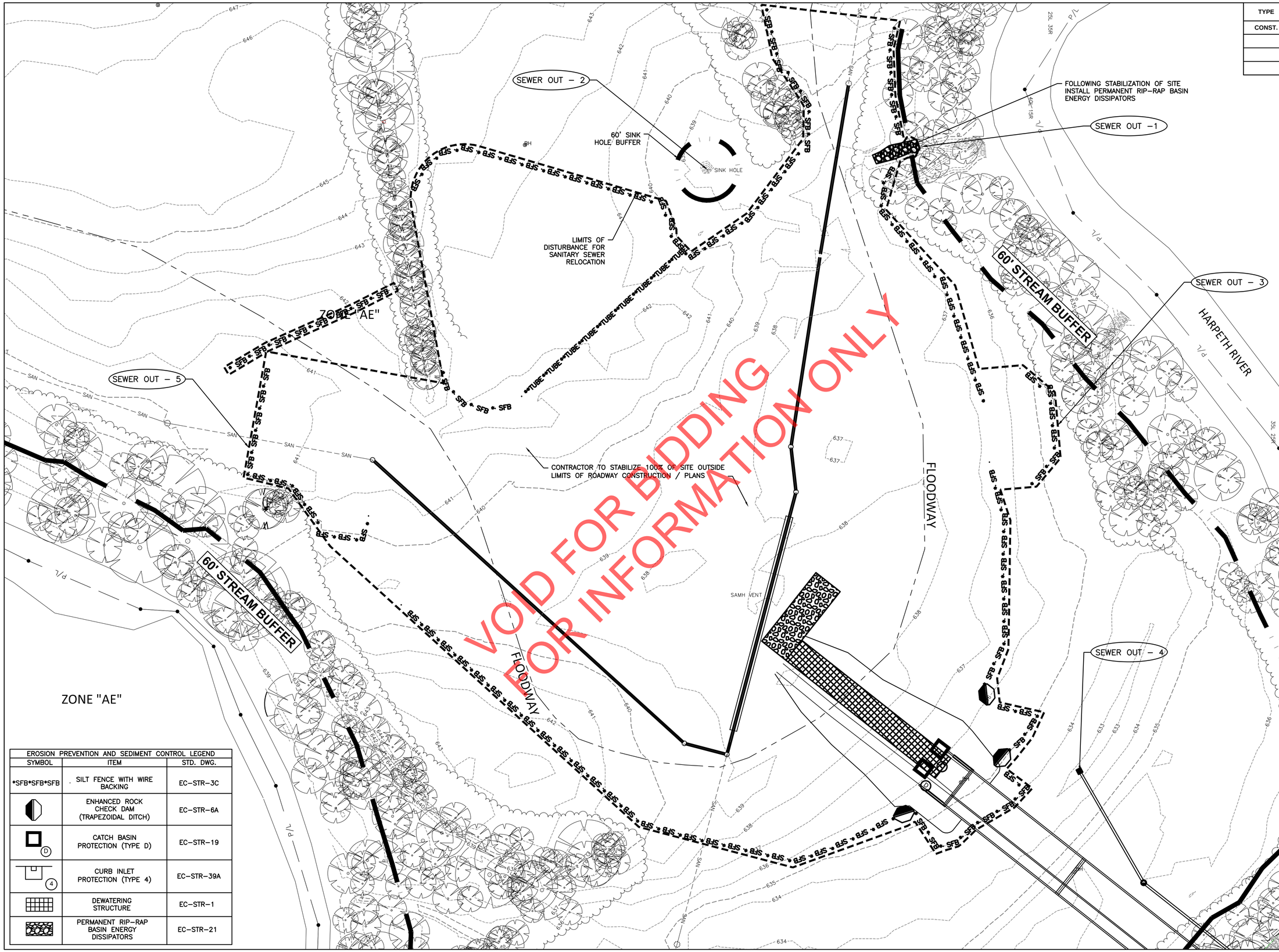

EROSION PREVENTION AND SEDIMENT CONTROL LEGEND		
SYMBOL	ITEM	STD. DWG.
*SFB*SFB*SFB	SILT FENCE WITH WIRE BACKING	EC–STR–3C
	ENHANCED ROCK CHECK DAM (TRAPEZOIDAL DITCH)	EC–STR–6A
D	CATCH BASIN PROTECTION (TYPE D)	EC–STR–19
4	CURB INLET PROTECTION (TYPE 4)	EC–STR–39A
	DEWATERING STRUCTURE	EC–STR–1
	PERMANENT RIP–RAP BASIN ENERGY DISSIPATORS	EC–STR–21

GENERAL NOTES:

1) EPSC'S PROPOSED FOR THE SITE HAVE BEEN DESIGEND TO CONTROL STORM RUNOFF GENERATED BY A 5–YEAR. 24 HOUR STORM EVENT

2) TOTAL SITE DISTURBANCE = 12.02 AC

3) SEE ROADWAY PLANS FOR ESTIAMTED QUANTITIES AND GENERAL NOTES.

PAUL P. HOLZEN
REGISTERED ENGINEER
No. 102361
STATE OF TENNESSEE
09/22/2020

STAGE 2

CITY OF FRANKLIN
ENGINEERING DEPARTMENT

SEWER RELOCATION EPSC LAYOUT

SCALE: 1"=50'

TYPE	YEAR	PROJECT NO.	SHEET NO.
CONST.	2020	COF# 2019-0098	U2-9

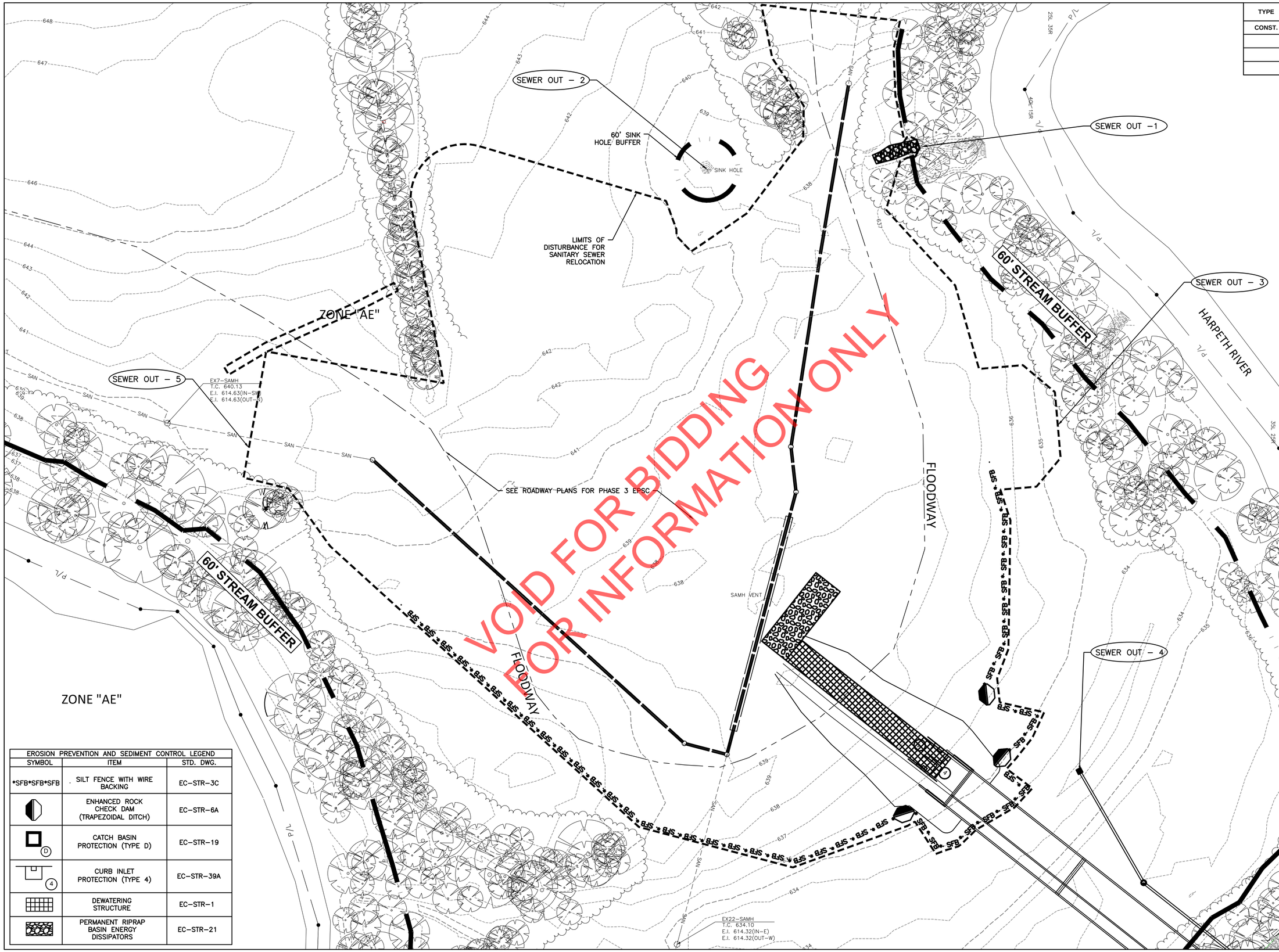

GENERAL NOTES:

1) EPSC'S PROPOSED FOR THE SITE HAVE BEEN DESIGEND TO CONTROL STORM RUNOFF GENERATED BY A 5–YEAR. 24 HOUR STORM EVENT

2) TOTAL SITE DISTURBANCE = 12.02 AC

3) SEE ROADWAY PLANS FOR ESTIAMTED QUANTITIES AND GENERAL NOTES.

EROSION PREVENTION AND SEDIMENT CONTROL LEGEND

SYMBOL	ITEM	STD. DWG.
*SFB*SFB*SFB	SILT FENCE WITH WIRE BACKING	EC–STR–3C
	ENHANCED ROCK CHECK DAM (TRAPEZOIDAL DITCH)	EC–STR–6A
D	CATCH BASIN PROTECTION (TYPE D)	EC–STR–19
4	CURB INLET PROTECTION (TYPE 4)	EC–STR–39A
	DEWATERING STRUCTURE	EC–STR–1
	PERMANENT RIPRAP BASIN ENERGY DISSIPATORS	EC–STR–21

PAUL P. HOLZEN
REGISTERED ENGINEER
No. 120-0121
STATE OF TENNESSEE
09/22/2020

STAGE 3

CITY OF FRANKLIN
ENGINEERING DEPARTMENT

SEWER RELOCATION EPSC LAYOUT

SCALE: 1"=50"

TYPE	YEAR	PROJECT NO.	SHEET NO.
CONST.	2020	COF# 2019-0098	U2-10

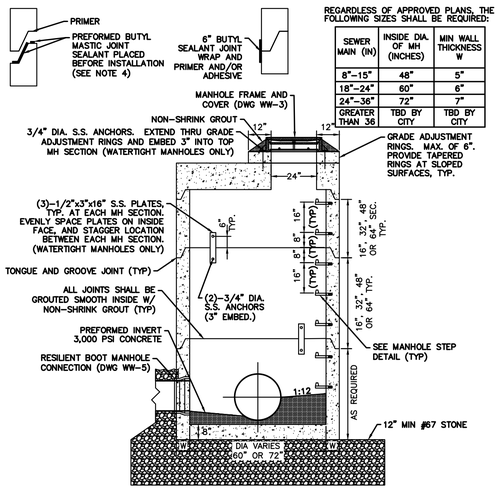

60" OR 72" MANHOLE

REGARDLESS OF APPROVED PLANS, THE FOLLOWING SIZES SHALL BE REQUIRED:

SEWER MAIN (IN)	INSIDE DIA. OF MH (INCHES)	MIN WALL THICKNESS W
8"-15"	48"	5"
18"-24"	60"	6"
24"-36"	72"	7"
GREATER THAN 36	TBD BY CITY	TBD BY CITY

THE USE OF FLAT-TOP MANHOLES SHALL BE APPROVED BY COF WATER MANAGEMENT

NOTES:
1) STRUCTURE SHALL CONFORM TO ASTM C478, LATEST REVISION.
2) CONCRETE – f'c = 4,000 PSI MIN.
3) REBAR – ASTM A615 GRADE 60 AND ASTM A1064
4) LOADS – AASHTO H-20 LOAD RATED WITH 30% IMPACT
5) EXISTING MANHOLES SHALL BE CORE DRILLED FOR SEWER CONNECTION.
6) ALL PRECAST MANHOLES SHALL CONTAIN XYPEX ADMIXTURE OR APPROVED EQUAL.
7) COMPRESS MANHOLE RISERS TOGETHER PERMITTING VISUAL INSPECTION OF SEALANT. SEALANT SHALL PROTRUDE FROM JOINT CIRCUMFERENCE FOR ACCEPTANCE. WHERE MASTIC DOES NOT PROTRUDE, EITHER INSIDE OR OUTSIDE, INJECT JOINT WITH CONSEAL CS-231, CONTROLLED EXPANSION WATERSTOP.

60" AND 72" DIAMETER PRECAST MANHOLES			DWG. NO. WW-2
CITY OF FRANKLIN	WATER MANAGEMENT DIRECTOR:	DATE: 10/16/2019	
NOT TO SCALE			

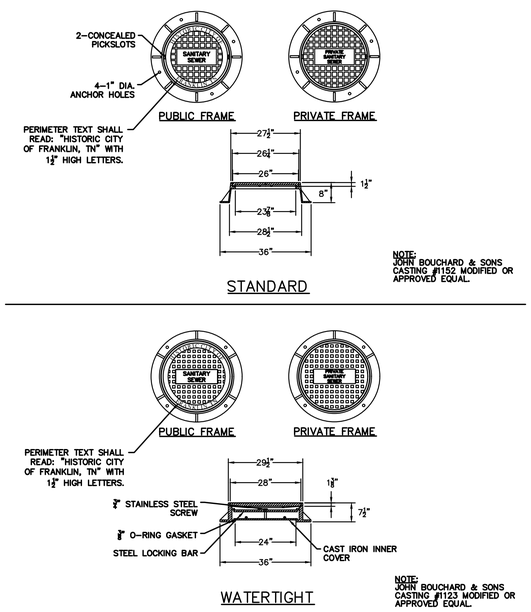

MANHOLE FRAME AND COVER			DWG. NO. WW-3
CITY OF FRANKLIN	WATER MANAGEMENT DIRECTOR:	DATE: 10/16/2019	
NOT TO SCALE			

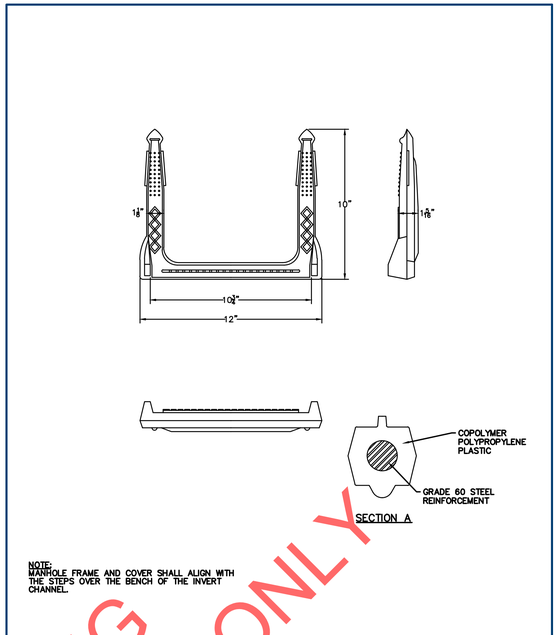

MANHOLE AND VAULT STEPS			DWG. NO. WW-4
CITY OF FRANKLIN	WATER MANAGEMENT DIRECTOR:	DATE: 10/16/2019	
NOT TO SCALE			

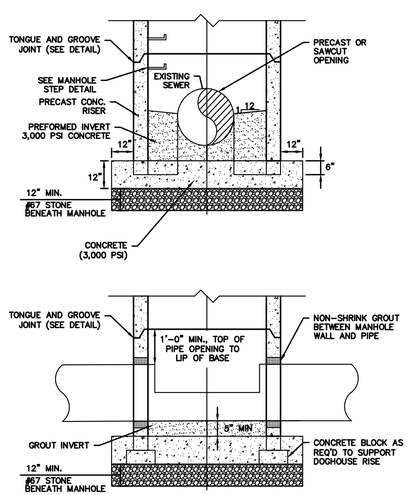

NOTES:
1) ALL PRECAST ELEMENTS SHALL CONFORM TO ASTM C478.
2) ALL PRECAST MANHOLES SHALL CONTAIN XYPEX ADMIXTURE ACCORDING TO SPECIFICATIONS.

DOGHOUSE MANHOLE OVER EXISTING SEWER			DWG. NO. WW-8
CITY OF FRANKLIN	WATER MANAGEMENT DIRECTOR:	DATE: 10/16/2019	
NOT TO SCALE			

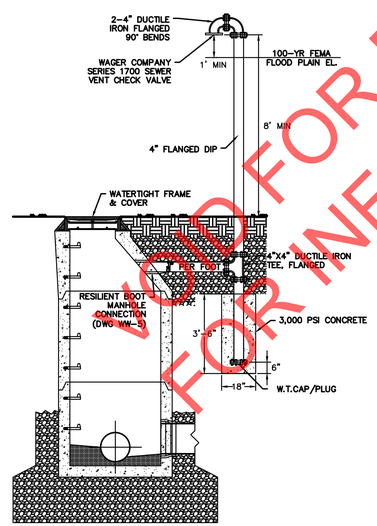

WATERTIGHT MANHOLE

NOTES:
1) VENT PIPE TO BE PAINTED WITH ONE COAT OF RED LEAD PRIMER, AND TWO COATS OF TNEMEC SERIES 66 GREEN ENAMEL (4-6 MILS DFT).
2) TOP OF VENT TO BE MINIMUM OF 8'-0" ABOVE GRADE OR HIGHER IF ELEVATION IS SHOWN ON PLANS.
3) VENT PIPE TO BE INSTALLED IN PRECAST HOLE IN CONE PROVIDED BY MANUFACTURER.

MANHOLE VENT			DWG. NO. WW-6
CITY OF FRANKLIN	WATER MANAGEMENT DIRECTOR:	DATE: 10/16/2019	
NOT TO SCALE			

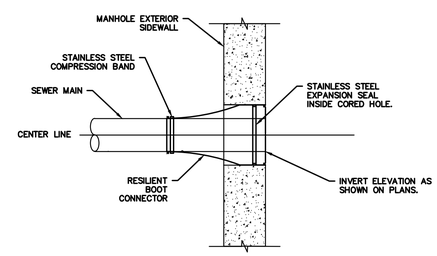

RESILIENT BOOT MANHOLE CONNECTION			DWG. NO. WW-5
CITY OF FRANKLIN	WATER MANAGEMENT DIRECTOR:	DATE: 10/16/2019	
NOT TO SCALE			

VOID FOR BIDDING
FOR INFORMATION ONLY

PAUL P. HOLZEN
REGISTERED ENGINEER
No. 112890
AGRICULTURE
09/27/2020
STATE OF TENNESSEE

CITY OF FRANKLIN
ENGINEERING DEPARTMENT

SANITARY SEWER DETAILS

TYPE	YEAR	PROJECT NO.	SHEET NO.
CONST.	2020	COF# 2019-0098	U2-11

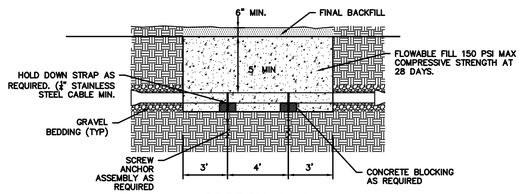

SECTION A–A

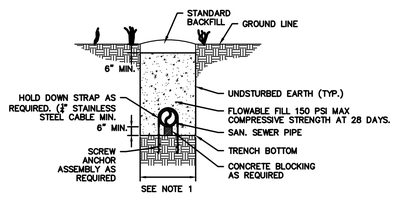

NOTES:
1) 24" KEYWAY TO BE CUT IN DIRT EXCAVATION (BOTTOM AND SIDES). IN ROCK EXCAVATION, REMOVE FRACTURED AND SHOT ROCK IN ROCK TRENCH, AND EXTEND PELLETIZED BENTONITE CLAY TO CLEAN, SOLID ROCK SURFACE (BOTTOM AND SIDES).
2) SCREW ANCHORS NOT REQUIRED FOR ROCK TRNCH. CONTRACTOR MAY PROVID ALTERNATIVE METHOD OF PIPE ANCHORAGE TO PREVENT FLOATATION.

CONCRETE CHECK DAM WITH FLOWABLE FILL PLUG

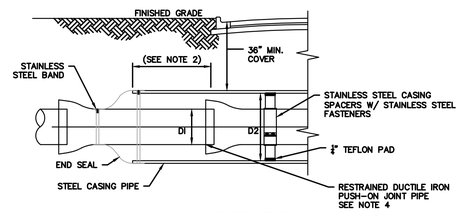

ELEVATION

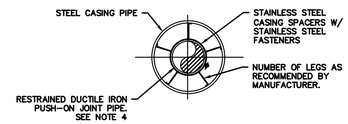

SECTION

NOTES:
1. WHEN CONSTRUCTION IS WITHIN TDOT OR RAILROAD JURISDICTION, ADDITIONAL REQUIREMENTS OF EACH AGENCY SHALL BE MET.
2. CASING SHALL EXTEND A MIN. OF 10' BEYOND EDGE OF PAVEMENT OR R.O.W., WHICHEVER IS FURTHER.
3. A MINIMUM OF 3 CASING SPACERS PER 20 LINEAR FEET OF INSTALLED CARRIER PIPE SHALL BE PROVIDED.
4. CARRIER PIPE SHALL BE RESTRAINED JOINT.

CARRIER PIPE AND CASING PIPE SIZES (MIN.)

CARRIER PIPE NOM. DIA (DI)	2	4	6	8	10	12	14	16	20	24
CASING PIPE NOM. DIA. (D2)	6	14	16	18	22	24	30	30	36	48
WALL THICKNESS (IN.) R.O.W.	0.250	0.250	0.250	0.250	0.250	0.250	0.312	0.312	0.375	0.500
WALL THICKNESS (IN.) RAILROAD	0.250	0.250	0.250	0.312	0.375	0.375	0.500	0.500	0.563	0.625

HISTORIC FRANKLIN TENNESSEE

CASING DETAIL

CITY OF FRANKLIN | WATER MANAGEMENT DIRECTOR: | DATE: 10/16/2019

NOT TO SCALE

DWG. NO. **G-10**

NOTE: 36" MIN. COVER FOR ALL UTILITIES UNLESS OTHERWISE APPROVED

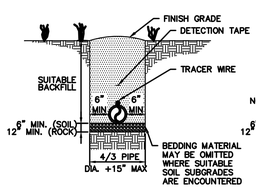

DIP PRESSURE PIPE

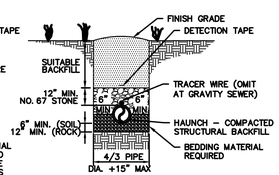

OTHER PIPE

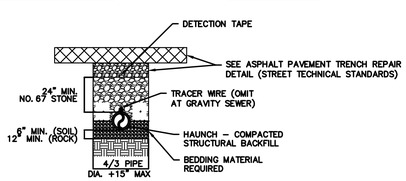

ALL PIPE UNDER PAVEMENT

NOTES:
1) ALL SUITABLE BACKFILL MATERIAL AND SUBGRADES SHALL BE APPROVED BY THE WATER MANAGEMENT DEPT.
2) ALL ROCK LOOSENED SHALL BE REMOVED; VOIDS CREATED BY SUCH REMOVAL SHALL BE FILLED WITH CRUSHED STONE.
3) REMOVE STONE FOR PIPE BELLS TO PROVIDE FULL CONTACT OF BEDDING.
4) BACKFILL SHALL BE TAMPED IN 6" LIFTS.
5) ACHIEVE 95% COMPACTION ON ALL BACKFILL.
6) NO ROCKS 6" IN DIAMETER OR GREATER ALLOWED IN SUITABLE BACKFILL.
7) PROVIDE STONE BACKFILL FOR PIPING WITHIN DRIVEWAYS, ROADWAYS AND PARKING AREAS UNLESS OTHERWISE APPROVED. SEE ASPHALT PAVEMENT TRENCH REPAIR DETAIL WHEN IN PAVED AREAS.
8) TRENCH DEWATERING SHALL BE DONE IN ACCORDANCE WITH TDOT STD DRAWING EC–STR–1 AND EC–STR–2
9) TRACER WIRE SHALL BE COPPER CLAD, 12 GA. MIN., WITH COLOR–CODED 30 MIL. HDPE INSULATED JACKET. PROVIDE WATERPROOF GREASE FILLED CONNECTIONS AT JUNCTIONS. TRACER WIRE SYSTEM SHALL BE TESTED FOR FUNCTIONALITY PRIOR TO ACCEPTANCE. TRACER WIRE SHALL NOT BE USED FOR GRAVITY SEWER LINES.
10) PROVIDE CHECK DAMS AT 50'–0" O.C. MINIMUM, UNLESS OTHERWISE DIRECTED BY WMD.

HISTORIC FRANKLIN TENNESSEE

UTILITY BEDDING AND BACKFILL DETAIL

CITY OF FRANKLIN | WATER MANAGEMENT DIRECTOR: | DATE: 10/16/2019

NOT TO SCALE

DWG. NO. **G-8**

VOID FOR BIDDING
FOR INFORMATION ONLY

PAUL P. HOLZEN
REGISTERED ENGINEER
No. 109127
STATE OF TENNESSEE
10/29/2020

CITY OF FRANKLIN
ENGINEERING DEPARTMENT

SANITARY SEWER DETAILS